STATIC CONVERSION SYSTEM FOR TREATMENT OF THE SOLAR ENERGY AND INTERCONNECTION WITH THE MAINS POWER SUPPLY

Denizar Cruz Martins (*Member IEEE*), Rogers Demonti, Ivo Barbi (*Senior Member IEEE*).
Federal University of Santa Catarina - Department of Electrical Engineering.
Power Electronics Institute
P.O. Box 5119 - 88.040-970 - Florianoplolis - SC - Brazil.
Phone: 55-48-331-9204. Fax: 55-48-234-5422. (E-mail: denizar@inep.ufsc.br).

Abstract - This paper presents the analysis of a static conversion system for treatment of the solar energy from photovoltaic panels. This system is interconnected with the mains power supply, contributing to the generation of the electrical energy. The power structure is composed by a current-fed push-pull converter, a buck converter, and a current inverter. The main features of the system are: simple control strategy, robustness, lower harmonic distortion of the current and natural isolation. The principle of operation, design procedure and experimental results are presented.

I – INTRODUCTION

The conventional energy sources, obtained from our environment, tend to exhaust with relative rapidity due to its irrational utilization by the humanity. This uncontrolled extraction of the natural energies, certainly will lead the harmony of our ecological system to the instability. It is important to point out, that if it occurs the recuperation of this system will be practically impossible.

As a consequence of this possibility, the apprehension for a diminution of the petroleum sources, natural gas and natural resources of coal has been intensified. For this reason, the effort to find new sources of energy, to permit reduction in the utilization of the natural resources of fuel, became a challenge for all scientific and technological areas in the world, and specially for the electrical engineering area.

Within this content, the solar energy appears as an important alternative to the increase of the energetic consumption of the planet, once that, the quantity of the energy from the sun, that arrives on the earth surface in a day, is ten times more than the total energy consumed for all the people of our planet during a year [1].

Through the photovoltaic effect the energy contained in the sunlight can be converted directly into electrical energy. This method of energy conversion presents some advantages, such as:

- Simplicity;
- Does not exist any moving mechanical part;
- Its modular characteristic offers large flexibility in the design and application of this kind of energy generator;
- Short time of installation and operation;
- High reliability, and low maintenance.

Besides, photovoltaic solar systems represent a silent, safe, not polluted, and renewable source of electrical energy hardly appropriated for the integration in the urban area, reducing almost completely the energy transmission losses, due to the proximity between the generation and the consumption.

This kind of energy source, traditionally attractive in rural areas, begins now to be economically viable in applications interconnected to the mains power supply. In that case, the photovoltaic panels are incorporated in the roofs or facades of commercial buildings and residential houses, delivering electric energy to the mains. Thus, the photovoltaic panels can operate as little power stations in parallel with the Commercial Electric Utility.

Considering the application mentioned above, this paper describes a static conversion system for treatment of the solar energy from photovoltaic cells. This system is interconnected with the mains power supply, contributing to the generation of the electrical energy. The complete system consists of a current-fed push-pull converter connected to a buck converter, and in the output stage a current inverter. The control circuit strategy is very simple. It uses an average current control and a PWM modulation in the buck converter, for obtaining a rectified sinusoidal current.

Many works in this application area have been proposed in the technical literature [2, 3, 4]. Some of them are very interesting and important; however, the isolation of the power structure is not natural or is accomplished with low frequency, and their control strategies are somewhat sophisticated. The power structure proposed in this paper is particularly robust and naturally isolated. Its main features are: simple control strategy and lower harmonic distortion of current.

II – PHOTOVOLTAIC PANELS CHARACTERISTICS

The photovoltaic panels transform the sunlight energy directly in electrical energy. Figure (1) shows the typical output current-voltage characteristic of a photovoltaic panel, for two different levels of solar insolation, with a constant temperature.

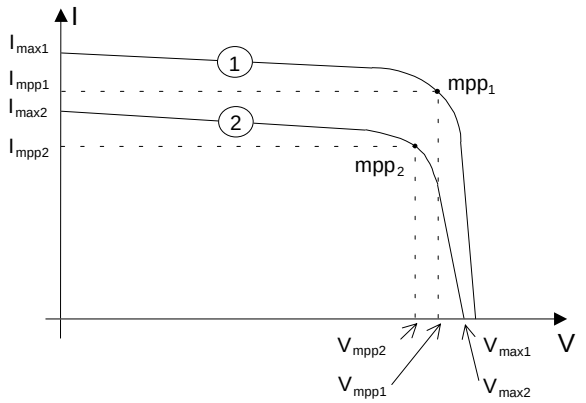

Fig. 1: Typical output current-voltage characteristic of a photovoltaic panel, for two different levels of solar insolation.

In Fig. 1, curve 1 corresponds to the highest isolation level. In this curve exists one point, where we have the maximum power delivered by the photovoltaic panel. This point is represented by mpp_1. For the lowest insolation level (curve 2), another point form maximum power is obtained (mpp_2). Therefore, for each solar irradiation level, that reach the photovoltaic panel, exists one point of maximum power. It is important to emphasize that the temperature of the semiconductor PN junction also affects the maximum power point (*mpp*) and the efficiency of the panel.

The *mpp* can be obtained multiplying the voltage V_{mpp} by the current I_{mpp}. This power represents the area delimited by the dashed line of V_{mpp} and I_{mpp} (Fig 1).

There is an important item, that we have must consider, in designs that use the sun as a source of energy. The irradiation that reaches the earth surface varies daily, and besides it depends on each season of the year. So, for a given system, the solar energy available varies considerably during the year.

In this work, the system to search the *mpp* was not implemented.

III – Principle of Operation

In the engineering view, the interconnection between the solar panels and the mains, must follow some prerequisites, so that the energy delivered to the mains will have high quality, and the system will have to offer high reliability and safety.

For that, the proposed power static conversion system must present some important items, to produce high quality energy to the mains. These items are shown in Fig. 2, and they can be considered as the principal objectives of the proposed circuit.

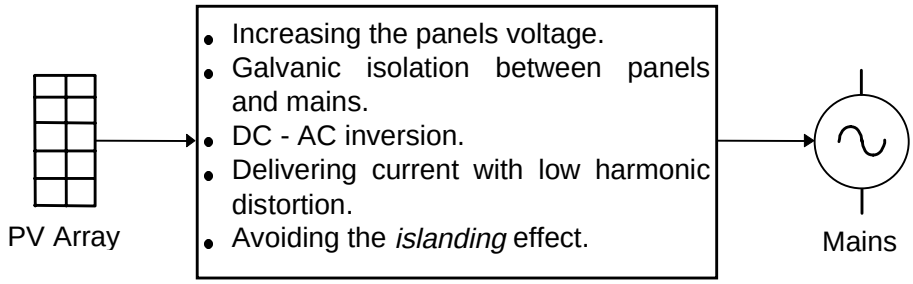

Fig. 2: Principal objectives of the static conversion system.

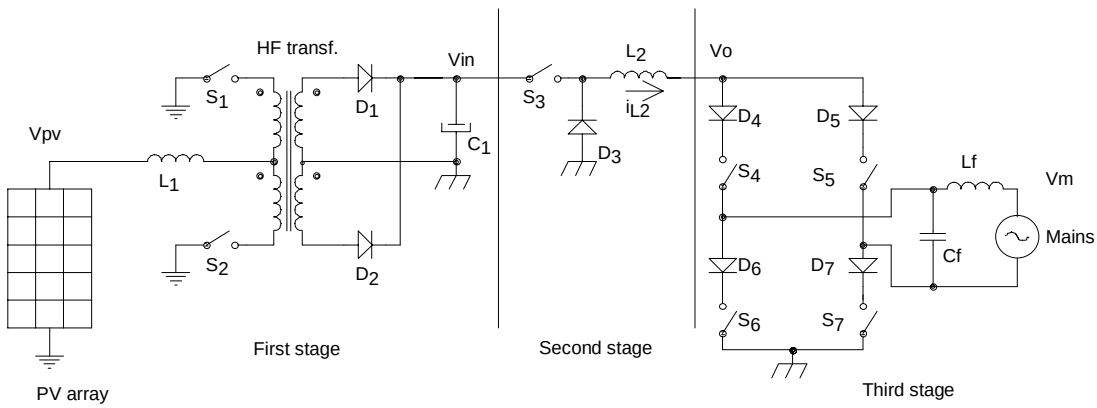

Fig. 3: Proposed power structure diagram.

III.A – FIRST STAGE

In this stage the duty cycle is kept constant (D = 0.7). So, the output voltage (*Vin*) is not controlled by this stage. The next stage (buck converter), controls the voltage *Vin*, through the close loop voltage connected in its input (Fig. 6).

Small variations of the voltage *Vin*, around 400 V permit the power transferred by the panels to the input of the buck converter to be variable and dependent of the available power in the photovoltaic panels, in a defined instant.

When the panels is delivering no power, the *Vin* voltage will fall around zero, and consequently the duty cycle of the buck converter goes to zero too, and will not have power delivered to the mains.

The proposed static conversion system for treatment of the solar energy is composed by three stages. The power structure diagram is presented in Fig 3.

In the first stage we have the photovoltaic panels connected to the current-fed push-pull converter. The objectives of this stage consist in providing the isolation between the panels and the mains, and increasing the voltage for the next stage. The output voltage of this stage is approximately 400V. This stage operates in high frequency (20 kHz), with the aim to reduce the volume of the transformer.

Due to the current-fed characteristic, the switches S_1 and S_2 can not keep up opened simultaneously. The drives control voltages of those switches are shown in Fig. 4. The push-pull converter operates in continuous conduction mode with constant frequency, and its duty cycle is defined by Eq. 1, where *Ts* represents the switching period of the converter.

$$D = \frac{2 \cdot \Delta ta}{Ts} \tag{1}$$

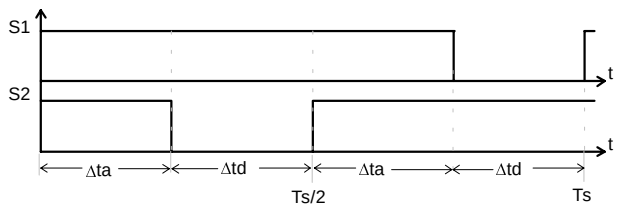

Fig. 4: Drive control voltage of switches S_1 and S_2.

The second stage is formed from the buck converter. In this stage the control circuit strategy is very simple, where a current feedback loop is imposed. It uses an average current control and a pulse width modulation (PWM), with 20 kHz switching frequency, for obtaining in the output a rectified current of 120 Hz. The reference sinusoidal voltage is obtained from the mains power supply, so that, in the absence of the mains the photovoltaic system does not work, avoiding the *islanding* effect.

The current modulation is based on the following equations:

$$Vo(\theta) = Vm = Vp \cdot sin\theta \tag{2}$$

$$Vo(\theta) = Vin \cdot D(\theta) \tag{3}$$

$$D(\theta) = \frac{Vp}{Vin} \cdot sin\theta \quad \rightarrow \quad \text{Duty cycle of the buck.} \tag{4}$$

The current ripple in L_2 is given by:

$$\Delta i_{L_2} = \frac{[Vin - Vp \cdot sin\theta]}{L_2 \cdot fs} \cdot D(\theta) \tag{5}$$

Thus,

$$\Delta i_{L_2 max} = \frac{Vin}{4 \cdot L_2 \cdot fs} \tag{6}$$

where *fs* represents the switching frequency.

Fig. 5 represents the buck output current, obtained via numerical simulation.

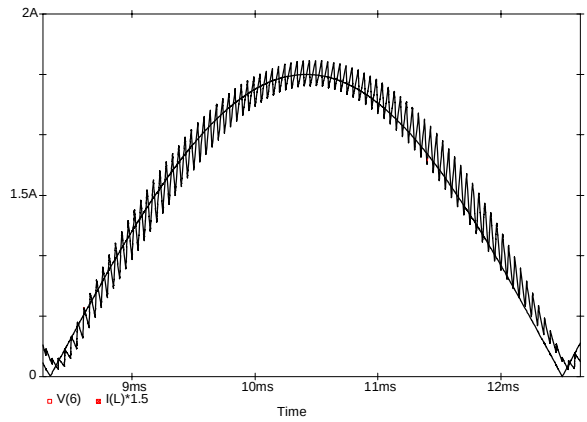

Fig. 5: Output current in the second stage.

In third stage we have a current inverter, that permits to obtain a sinusoidal current with the same frequency of the mains power supply (60 Hz), but with a phase angle of 180°. This current is delivered to the mains, transferring energy from the sun to the Commercial Electric Utility (220 V / 60 Hz).

Fig. 6 shows the whole structure diagram, including the control circuit strategy employed in this work.

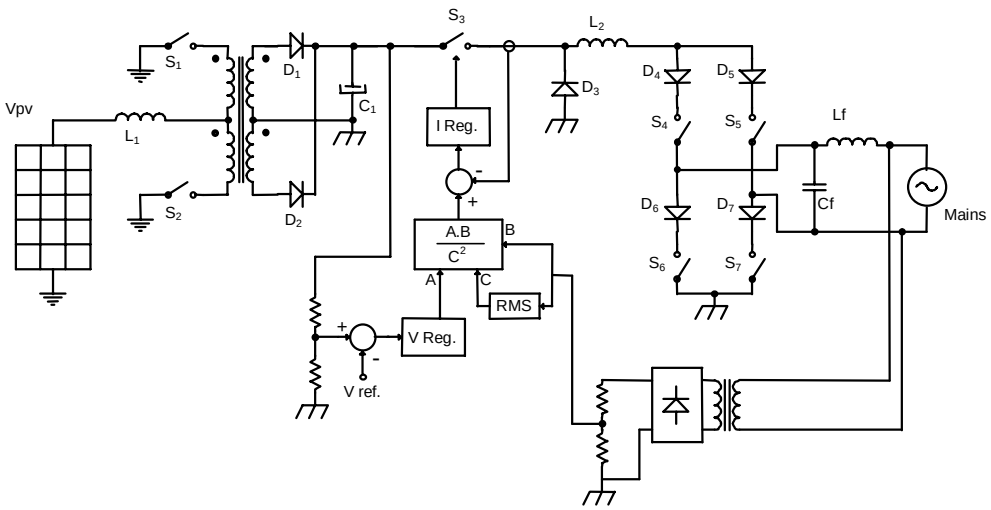

Fig. 6: Power structure and its control strategy.

IV – Design Procedure and Example

IV.1 – Specifications

V_{PV}	=	14 V	(Push-pull input voltage);
D	=	0.7	(Duty cycle of the push-pull);
Po	=	300 W	(Mains delivery power);
fs	=	20 kHz	(Switching frequency);
f	=	60 Hz	(Mains frequency).

Mains power supply: single-phase 220 V / 60 Hz;

IV.2 – Inductance L_1

The inductance L_1 can be obtained from the following equations:

$$L_1 = \frac{Vpv \cdot D}{2 \cdot fs \cdot \Delta I_{L_1}} = 98\mu H \;;$$

where $\Delta I_{L_1} = 0.1 \cdot \left(Po / Vpv \right)$

IV.3 – Transformer turns ratio (a)

$$a = \frac{Vpv}{Vin} \cdot \frac{1}{1-D} = 0.12$$

where $Vin = 400\ V$ (buck input voltage);

IV.4 – Capacitor C_1

The capacitor C_1 is given by:

$$C_1 = \frac{Po / Vpv}{2 \cdot fs \cdot \Delta Vo} \cdot D = 7.8\mu F \;;$$

where $\Delta Vo = 0.1 \cdot Vin$

IV.5 – Inductance L_2

$$L_2 = \frac{Vin}{4 \cdot fs \cdot \Delta i_{L_{2max}}} = 12.96 mH \;;$$

$$\Delta i_{L_{2max}} = 0.2 \cdot i_{L_{2peak}} \;,$$

where $i_{L_{2peak}} = \dfrac{2 \cdot Po}{Vp}$ and

$Vp = \sqrt{2} \cdot 220$.

IV.6 – Output filters (Cf, Lf)

For the output filters the conventional design was used. So, the following values were obtained:

Cf = 560 nF ; Lf = 2.0 mH

V – Experimental Results

A prototype rated 300W was built to evaluate the proposed circuit. The specifications are given in the previous item. MOSFETs were used for the main switches. Fig. 7 presents the current and voltage in the MOSFET of the push-pull converter. The voltage and the current in the MOSFET of the buck converter are shown in Fig. 8. Fig. 9 shows the voltage and current in the switch S4. The drive signals of the current inverter are given in Fig. 10. Fig. 11 presents the voltage and current transferred to the mains power supply. Fig. 12 and Fig 13 show the total harmonic distortion (THD) of the voltage and current respectively.

An efficiency of 80% was obtained at full load conditions.

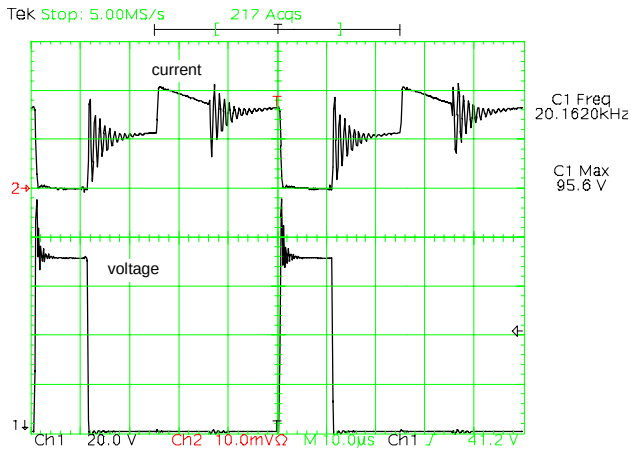

Fig. 7: Current and voltage in switch S_1.
20 V/div; 10 A/div; 10 µs/div.

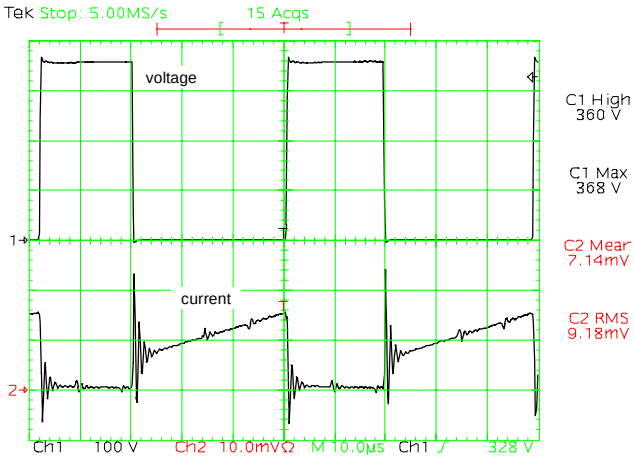

Fig. 8: Voltage and current in switch S_3.
100 V/div; 1 A/div; 10 µs/div.

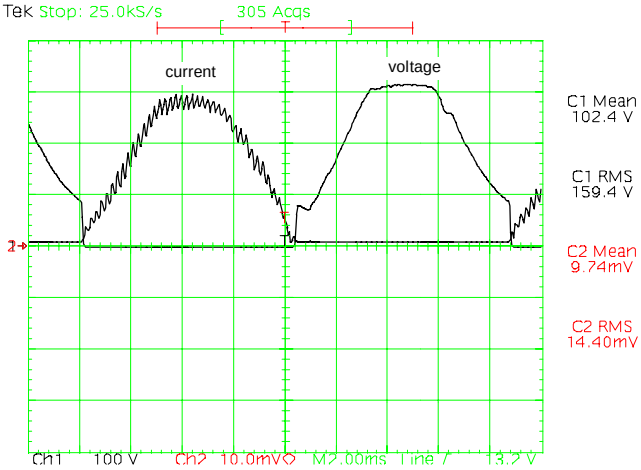

Fig. 9: Voltage and current in switch S_4.
100 V/div; 0.5 A/div; 2 ms/div.

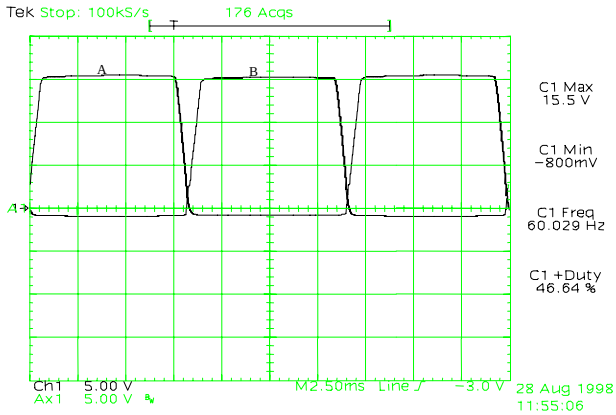

Fig. 10: Drives signals of the current inverter switches.

Signal A → S_4 , S_7
Signal B → S_5 , S_6
5V/div; 2.5ms/div.

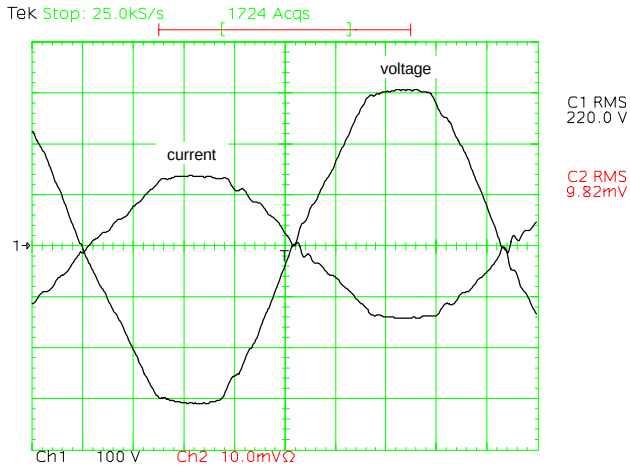

Fig. 11: Voltage and current in the mains power supply.
100 V/div; 1 A/div; 2 ms/div.

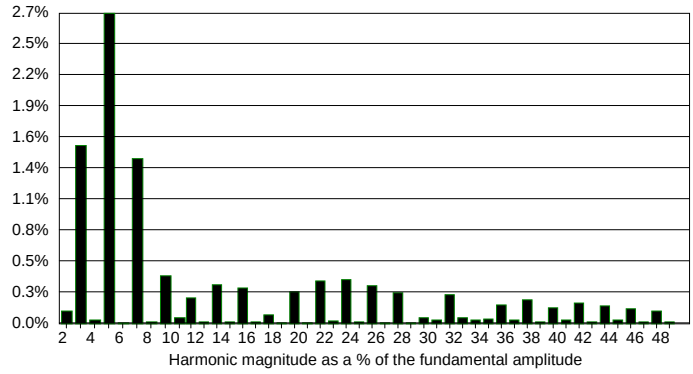

Fig. 12: Voltage harmonic analysis of the mains power supply.
THD = 3.69%.

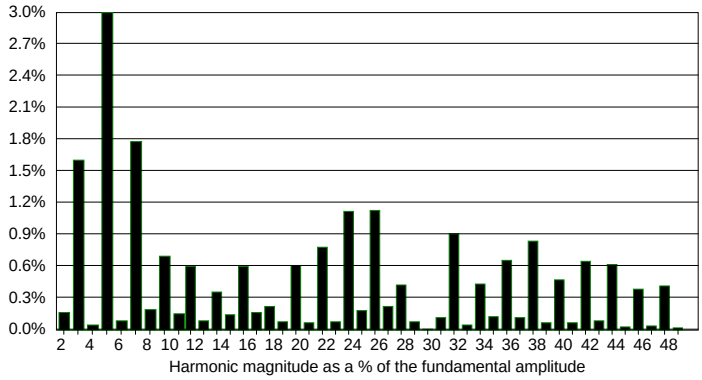

Fig. 13: Current harmonic analysis of the mains power supply.
THD = 4.89% , phase = -175°.

VI – SUMMARY

This paper has presented the analysis of a static conversion system for treatment of the solar energy from photovoltaic cells. This system is interconnected with the mains power supply, contributing to the generation of the commercial electrical energy.

According to the results obtained we have a DC-AC static conversion system with the following features:

- It is particularly robust;
- It has a simple control strategy;
- It uses low cost technology;
- Does not present *islanding* problem in the failure of the mains power supply;
- Many systems can be associated in parallel;
- Simple installation;
- Lower harmonic distortion of current;
- Natural isolation.

This system can be applied in residential or commercial buildings, for low or high power. Therefore, authors believe that this topology can be very useful for some residential and/or industrial applications.

VII – REFERENCES

[1] R. Rüther "**Use of the Photovoltaic Solar Energy**". Seminar - Non Conventional Energy Sources. Florianopolis - SC, 1998, pp. 9-25.

[2] M. Calais & V.G. Agelides. **Multilevel Converters For Single-Phase Grid Connected Photovoltaic Systems - An Overview**. IEEE - ISIE'98, July/1998, pp. 224-229.

[3] S. J. Chiang, K. T. Chang & C. Y. Yen. **Residential Photovoltaic Energy Storage System**. IEEE Trans. on Industrial Electronics, vol. 45, No. 3, June 1998.

[4] H. Kobayashi & K. Takigawa. Islanding Prevention Method For Grid Interconnection of Multiple PV Systems.

[5] **High Power Factor Preregulator**. Application Information UC 3854, Unitrode.