Modelling Industrial Drives for Power Electronics Studies Part I - Electric Cable

Antonio Carlos S. de Lima and Richard M. Stephan
COPPE/UFRJ
Universidade Federal do Rio de Janeiro
Programa de Engenharia Elétrica
C.P.68504, Rio de Janeiro
21945-970 RJ Brazil
siqueira@coe.ufrj.br

Abstract— **The semiconductor technology has made a considerable advance in the last two decades. Several industrial processes now use adjustable speed drives based on semiconductor components. Furthermore, some of these, e.g. oil boosting and paper and pulp processes, demand an inclusion of an electric cable to connect the converter to the motor. The converter switched voltage creates traveling pulses in the cable and, to correctly assess the voltage ringings, a frequency dependent model is needed. As the cable length increases it is also important to consider the distributed nature of the cable. This paper describes how a frequency dependent cable was implemented in EMTP. Instead of using the conventional modal domain, which presents several restrictions with respect to cable modelling, a phase domain approach is considered. The model is an extension of a previous one developed for transmission lines. The effect of a PWM voltage at the cable input is also commented.**

I. Introduction

Some countries do oil prospecting in deep water, where the sub-sea system consists of Electric Submersible Pumps (ESP) directly in the well. In Brazil, this type of extraction is mainly used in oil exploitation [1]. One problem of peculiar concern in this type of system is its inaccessibility. After being installed the motor winding or its rotating parts cannot be accessed. Fig. 1 shows the basic components of the system. Nowadays, medium voltage drives usually have a step-up transformer, the converter switches are usually low voltage.

With respect to electrical system, the modelling can be divided in two major groups: one dealing with the design and test of controllers and the other with a more accurate implementation of the physical behaviour of the equipment. In either case, detailed information is priceless. Moreover, in the particular case under study here, the frequency effect in the equipment is of the out-most importance. It defines the limits and the frequency range and dictates how the models can be implemented.

II. Cable Model

There are several types of cables used for motor drives [2]. They are commonly three-phase pipe cable. The submarine cables are three-phase, specially designed to work in depths up to 1000m to feed induction motors that drive the oil pumps. These cables are one of the most expensive part in oil exploitation systems with ASD, their long cable length contributes to damp the high frequency ringing at the motor terminals. This happens due to the distributed nature of the cable capacitance. It can cause over-voltages, therefore increasing the stresses on the motor.

Long cables are not easy to model. Simple cable models with lumped parameters or ideal distributed parameter will give answers far from reality, and lumped π-circuits could even lead to wrong responses.

The motors designed for use in deep oil well applications are, in essence, induction motors with unusual electrical and mechanical parameters, they are usually called ESP (electric submersible pump) motors. They consist of a tandem connection of small rotors cooled by internal and external oil flows. The motor diameter is about 20cm and its length can reach 15m, depending on the motor power level.

The cable model must consider the frequency dependence if near real values are wanted. To solve the System equations involved here there basically are two options, frequency-domain or time-domain analysis. Indeed some works [3][4] have already considered the effect of a long cable in a drive system using frequency domain analyses. The frequency domain has the advantage of an easy implementation of frequency dependence, however, it lacks the capability to represent non-linearities.

The cable model can be represented by two distinct forms, distributed or lumped parameters. Numerically speaking lumped parameters are more easily implemented, however to represent the actual distributed nature of the cable several cascade sections of lumped π circuits should be used. The frequency dependence can be done via Foster circuits (series association of R-L parallel circuits) representing the cable resistance and inductance at different frequencies. On the other hand, distributed models present some challenges concerning the representation of the frequency dependence losses. To correctly asses the frequency

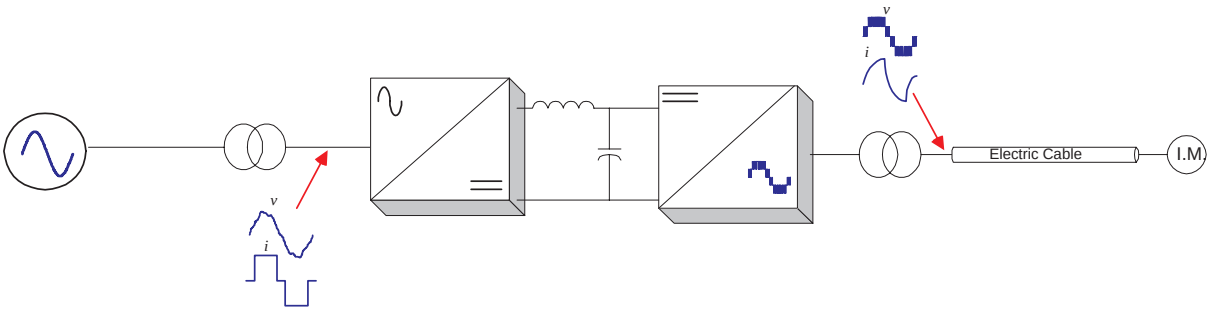

Fig. 1. Basic System Topology

of oscillations created by the inverter in the cable is important to take into account the frequency phenomenon. This work uses a hybrid formulation. The losses, which are essential for realistic voltage levels in the simulation are taken as lumped parameters. The frequency independent part of the cable model is modelled as distributed parameters.

The cable model consists of an extension of a model previously applied in overhead transmission lines. It is in phase coordinates and is not only reliable, but is numerically stable and allows an extension of the accuracy until the highest frequency of interest. There is a large variety of cable design and is rather difficult to develop a definitive way to classify them. They can be classified in such different approaches as power level, physical structure or insulation material. In power electronic applications the cables can be classified as: Single-Core Cable SC (a core and an enclosing sheath), and Pipe-Type Cable PT (three cores with individual sheaths and enclosing pipe).

The cable parameters are frequency dependent due to skin effect and proximity effect of other conductor and the armour and the sheath. Solving Bessel equations [5][6] or using finite elements methods [7] are definitely the best solutions concerning the cable parameters. Both methods nonetheless require details concerning the material and dimension of the cable, and this type of information is not always available. Another option is to use manufacturer information, the cable manufacturer usually provides the cable impedance in symmetric components from frequencies in the range of 50Hz up to 6kHz. Impedances in symmetric components can be transformed in self and mutual impedances using the Karrenbauer transformation [8]. After calculating the self and mutual values, linear interpolation and extrapolation are used to extend the frequency range from 0.01Hz–20kHz. The value of 10kHz is taken as the maximum frequency of interest. Fig 2 shows the cable impedances for a 6kV submarine PT cable using EPR (ethylene propylene). One can note from the mentioned figure that the mutual impedance is considerably lower than the self impedance. Accordingly to manufacturer information, as the voltage level increases, the coupling impedance will be higher.

The cable information is adapted so it can be represented via the existing transmission line models. Electrical cables have a higher capacitance and a smaller inductance in comparison with overhead transmission lines. In transient phenomena, the surge impedance and propagation velocity of a cable is smaller than those of an overhead transmission line, usually around half the light speed (1.52×10^8m/s).

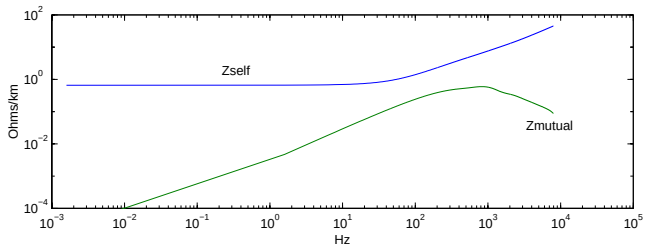

Fig. 2. cable impedances

The behaviour of an electric cable is fully described by the first-order differential equations shown in (1). The frequency dependent parameters are $\mathbf{R}(\omega)$ and $\mathbf{L}(\omega)$. There are also nonlinear effects in case of steel pipes, which is ignored here.

$$\begin{cases} -\dfrac{d\dot{\mathbf{V}}}{dx} = (\mathbf{R} + j\omega\mathbf{L})\dot{\mathbf{I}} \\ -\dfrac{d\dot{\mathbf{I}}}{dx} = (\mathbf{G} + j\omega\mathbf{C})\dot{\mathbf{V}} \end{cases} \tag{1}$$

Nonlinear effects cannot be expressed directly in the frequency-domain equations while frequency dependent effects cannot be expressed directly in time domain equations. The solution of (1) is in continuous time and deal with transcendental functions, (2) shows the general solution in the frequency domain.

$$\begin{aligned} \mathbf{V}(\omega, \mathbf{x}) &= e^{-\mathbf{\Gamma}x} V_f(\omega) + e^{\mathbf{\Gamma}x} V_b(\omega) \\ \mathbf{I}(\omega, \mathbf{x}) &= Y_c(\omega)\{e^{-\mathbf{\Gamma}x} V_f(\omega) - e^{\mathbf{\Gamma}x} V_b(\omega)\} \end{aligned} \tag{2}$$

where $V_f(\omega)$, $V_b(\omega)$ are forward and backward traveling wave vectors respectively, and $e^{-\mathbf{\Gamma}(\omega)x}$ is the propagation matrix and $Y_c(\omega)$ is the characteristic admittance matrix.

The modelling of such set of equations in a time domain program can be categorized in:

- Modal Domain
  - Fitting transcendental functions with rational functions (frequency domain fitting).

- Phase Domain
  - Fitting the functions directly in continuous time using Fourier Transform techniques.
  - Fitting directly in discrete time using the z Transform.
  - Separating the frequency dependent losses from the cable characteristic impedance and use ideal (lossless) segments to represent the wave propagation.

In a three-phase or multi-phase configuration the cable might be considered as a MIMO(Multi Input Multi Output) system. The evaluation of the stability can therefore be troublesome. The first solution method presented above uses Modal Transformation. The rational function fitting implies in using of minimal phase functions with negative poles. The other three techniques represent the development in the representation of frequency dependent wave equations in time domain programs done in the last decade. The last solution is simple but rather elegant procedure. When one extracts the losses, the function to be fitted is the trivial (it is a lossless wave equation). Indeed, this last solution is actually the only one capable of being implemented in EMTP or without any code change.

In EMTP programs, traditional frequency-dependent cable models are elaborated in the modal domain. The modal transformation turns a coupled system with $n \times n$ matrices into n decoupled systems. The main advantage of modal transformation is that each mode has its own propagation velocity. Thus each mode will behave like a single-phase line. This is particularly useful when the frequency dependence of the propagation factor and characteristic impedance is modelled via rational-functions synthesis. Let's consider again (1) using eigenvalue theory it turns into:

$$\frac{d^2}{dx^2}V_{mode} = \Lambda V_{mode} \tag{3}$$

where Λ is a diagonal matrix. The interface between phase and modal domains is done via the transformation

$$\begin{aligned} V_{phase} &= T_v V_{mode} \\ I_{phase} &= T_i I_{mode} \end{aligned} \tag{4}$$

Strictly speaking a different transformation may be used for the current and for the voltage. The voltage and current equations have different eigenvectors though the eigenvalues are the same. The transformation are, fortunately, related to each other as

$$T_i = ((T_v)^T)^{-1} \ ,$$

therefore only one transformation must be calculated. This is particularly useful when the frequency dependence of the propagation matrix and characteristic impedance are modelled via rational-functions synthesis. For some cable configurations, the transformation matrices become frequency dependent. This happens because the penetration depth varies with frequency and is normally smaller than the thickness of the sheath. It should also be noted that these matrices are highly frequency dependent in the range from 1 up to some kHz. Usually at very high frequencies the transformation becomes constant once more. If the frequency effect in the transformation is ignored and constant matrix transformations are used, one might use the concept of critical frequency. Thus there will be a low-frequency and high frequency cable model. The modelling accuracy will then depend upon which side of the critical frequency one is interested in. Whether it is right for one side of the transformation, it will be wrong for the other side. Unfortunately, this kind of solution may lead to numerical instability.

The frequency dependence of the modal transformation matrices can be introduced by convolution. Nevertheless this requires a detailed fitting of every element of the transformation matrices. The model presented in [9] deals with these problems by synthesizing the transformation matrices with rational functions. When all functions involved in the transformation matrices are minimal phase, this model works very well, though there are situations where this assumption does not hold true. This is a heavy constraint, mainly in the cable modelling which usually presents transformation matrices with several non-causal elements (they cannot be represented as minimal phase functions). Furthermore, the numerical advantage if compared with phase modelling is lost if the transformation matrices are not real. Both approach requires then $2n^2$ convolution operation, where n is the number of conductors. One way to avoid the difficulties related with frequency dependent transformation is to formulate the cable model in phase coordinates.

As said before, the cable model have two distinct parts, one to represent the losses and other to model the distributed phenomenon. The action of extracting the losses from the wave equation and representing them as a lumped network implies that instead of using time discretization, as in the conventional EMTP solution, one is dealing with space discretization. In time discretization one has to cope with superposition of propagation modes with different traveling times. In space discretization propagation is represented on a discretized segment of ideal line plus wave shaping by the cable losses. Physically, space discretization establishes that wave distortion due to the frequency dependence in the conductors are grouped into one frequency dependent network, while the ideal wave propagation in the medium due to the external magnetic and electric field are represented by a lossless segment.

Referring again to (1), the series impedance matrix $\mathbf{Z}$ presents frequency dependent elements. The cable resistance will increase with frequency due to the skin effect, this same phenomenon will cause the inductance to decrease with frequency. As the frequency becomes higher one can observe that the inductance will tend to a constant value. Thus, the equation of the elements of $\mathbf{Z}$ can be written as:

$$z_{ij}(\omega) = r_{ij}(\omega) + j\omega(L_{ij}^{ext} + \Delta L_{ij}(\omega)) \quad (5)$$

where ω is the frequency, R_{ij} is the conductor resistance, L_{ij}^{ext} is the inductance associated to the external flux and is constant, and ΔL_{ij} is the inductance related to the flux inside the conductor. If one groups the frequency dependent terms in (5) it can be rewritten as:

$$\mathbf{Z} = \mathbf{Z}^{loss} + j\omega\mathbf{L}^{ext} \quad (6)$$

where

$$z_{ij}^{loss} = r_{ij}(\omega) + j\omega\Delta L_{ij}(\omega) \quad (7)$$

The matrices associated with external magnetic and electric fields are frequency independent, therefore can be represented by an ideal cable. Fig. 3 shows the basic structure of the cable model with a general number of RL blocks.

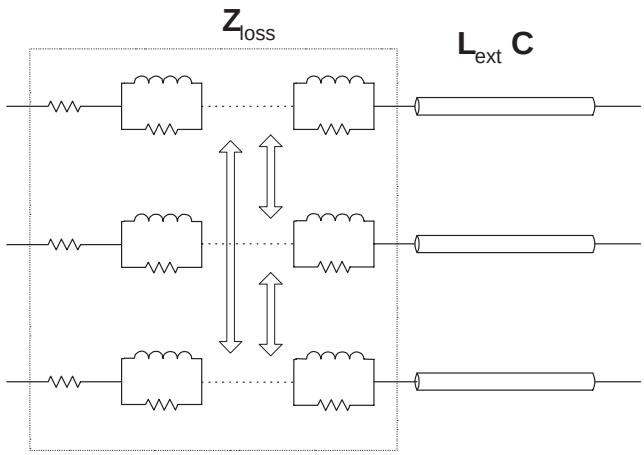

Fig. 3. Cable Model

In a lossless medium all modes travel at the speed of the light and there is a single time delay. Then the classical model developed by Dommel in [10] can be used. The model implementation is practically straight forward after the impedance $\mathbf{Z}^{loss}$ is extracted from the total parameters. The elements of the loss matrix are fitted via rational function approximations. The basic block for the loss part is a parallel RL circuit.

The main difference between the $\mathbf{Z_{line}}$ applied to transmission lines and to cables are the parameters. According to the manufacturer, the capacitance matrix is not diagonal as in underground cables. Nonetheless, the off diagonal elements are rather small and do not contribute to the wave propagation because the $\mathbf{L_{ext}}$ is diagonal. So it was decided to model capacitive coupling as a lumped capacitance at the cable terminals.

A. Minimal number of loss elements

In normal operation most types of ASD's will not have significant harmonics above a few kHz. Thus, with only one RL block a relatively accurate model can be obtained. The maximum frequency of interest is 10kHz. Fitted $\mathbf{Z_{loss}}$ match the original function at that frequency and at 60Hz. In the range of 100–10kHz, the model will present a higher impedance than the actual value, so conservative results are to be expected. Above 10kHz the fitted impedance is basically constant and large errors are expect if any harmonics exists above that frequency. If more than one block is used, not only the fitted impedance would be more close to the actual value but it would also have a higher cut-off frequency. Unfortunately, this would also imply in using coordinate fitting procedures to obtain a numerically stable solution. Another advantage of using only one block is that analytical expressions can be used to calculate the values of the RL circuit. For instance, the fitted $\mathbf{Z_{loss}}$ can for the self elements be given by:

$$\begin{aligned} R_{loss_{fit}} &= \frac{(\omega_0 L_s)^2}{R_s - R_{dc}} + R_s - R_{dc} \\ L_{loss_{fit}} &= \frac{R_s - R_{dc}}{\omega_0^2 L} + L_s \end{aligned} \quad (8)$$

and for the mutual:

$$\begin{aligned} R_{loss_{fit}} &= \frac{(\omega_0 L_m)^2}{R_m} + R_m \\ L_{loss_{fit}} &= \frac{R_m^2}{\omega_0 L_m} + L_m \end{aligned} \quad (9)$$

where ω_0 is the cutoff frequency, R_s, L_s, R_m and L_m are elements of the self and mutual $\mathbf{Z_{loss}}$ at frequency ω_0 respectively.

The cable might produce an amplifying effect in the harmonics due to the wave reflection. It is important to assess whether or not resonances at very high frequency harmonics may be excited by the cable. A simple test was used to evaluate whether or not the number of RL blocks should be increased. This test system consists of a three-phase PWM inverter with a maximum switching frequency of 5kHz, and a cable with the receiving end left open. In this example the three-phase where considered to be decoupled, so a three-phase model is just three independent single phase models. This case consists of a worst case scenario where all the traveling pulses from the converter will be reflected. Fig. 4 shows the results. In that figure one sees the line voltage generated by the converter and the line voltage at the end of the cable. One can notice the importance of the loss representation, without any loss the voltage output can reach values as high as 5 pu. Even with the usual EMTP representation unrealistic voltage are obtained. For very short cables the voltage output can surpass 2 pu [11] but it is very unlikely that it can reach more than 2.2 pu. If the two possible frequency dependent cable models are compared (item (c) and (d) in Fig. 4) one can observe that in terms of maxima and minima both models has the same value. From the results in Fig. 4, the miminal realization of $\mathbf{Z_{loss}}$ (1 RL block) does seem reasonable.

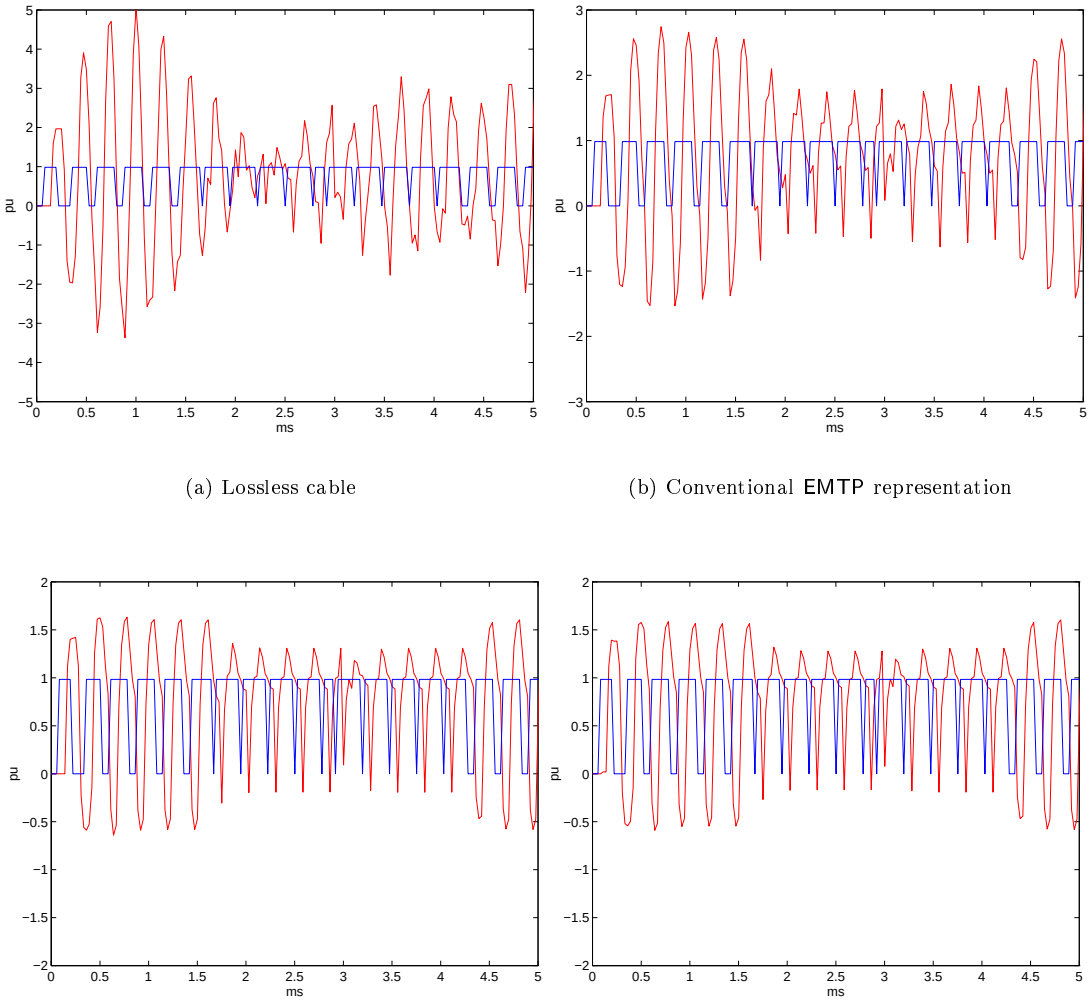

(a) Lossless cable

(b) Conventional EMTP representation

(c) $\mathbf{Z_{loss}}$ with 1 block

(d) $\mathbf{Z_{loss}}$ with 5 blocks

Fig. 4. Effects of the frequency dependency

III. Simulation & Experimental Verification

In most configurations today, the inverter works near maximum output voltage to produce high output torque. Thus the PWM-VSI (Pulse Width Modulated Voltage Source Inverter) works almost like a square wave, generating low order harmonics, but decreasing motor performance. The first system is a Square-Wave inverter with a step-up transformer with ratio 480:1350V, the motor is 950V, 135HP, the motor lead is 2.45km long. The second drive system uses a PWM-VSI with a step-up transformer with ration 460:1050V, a 1.5km lead and a 950V, 100HP motor. Figs. 5 and 6 show the results for the two systems.

IV. Conclusions

The importance of the representation of the skin effect in the cable was shown. The drive system consists of an ESP motor supplied from a remote frequency converter. This system is typical in offshore oil industry applications. Simulation results were compared with experimental ones in order to validate the system model. The frequency effect in the cable as well as in the motor must be considered if accurate results are to be expected. However the results show that simplified switch models can be used. It is important to model the rectifier and the inverter in the converter so the system can infer the oscillations in the voltage created by the dc link when the inverter is operating with a low switching frequency. All simulated waveforms were slightly more conservative than the experimental ones, due to the simplifications in the model. The induction motor modelling is presented in a companion paper.

Acknowledgment

The authors wish to express their gratitude to Mr.Jaime Mourente Miguel from PETROBRAS for providing the experimental results. Special thanks are also due to Prof.Hermann Dommel from the University of British Comlumbia for his kind comments and suggestions. This

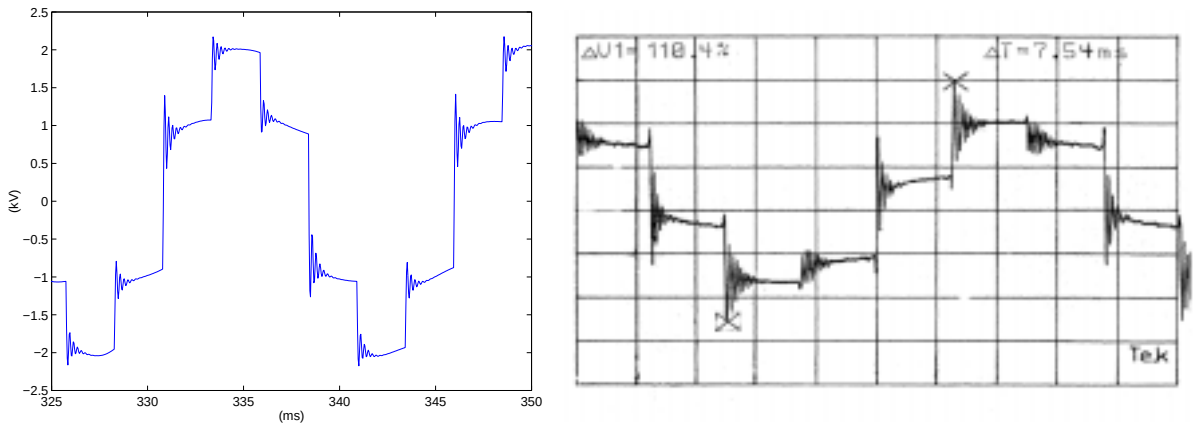

(a) Simulated

(b) Experimental (vert. 1.1kV/div, hor. 2ms/div)

Fig. 5. Cable Input Voltage – System with PAM-VSI

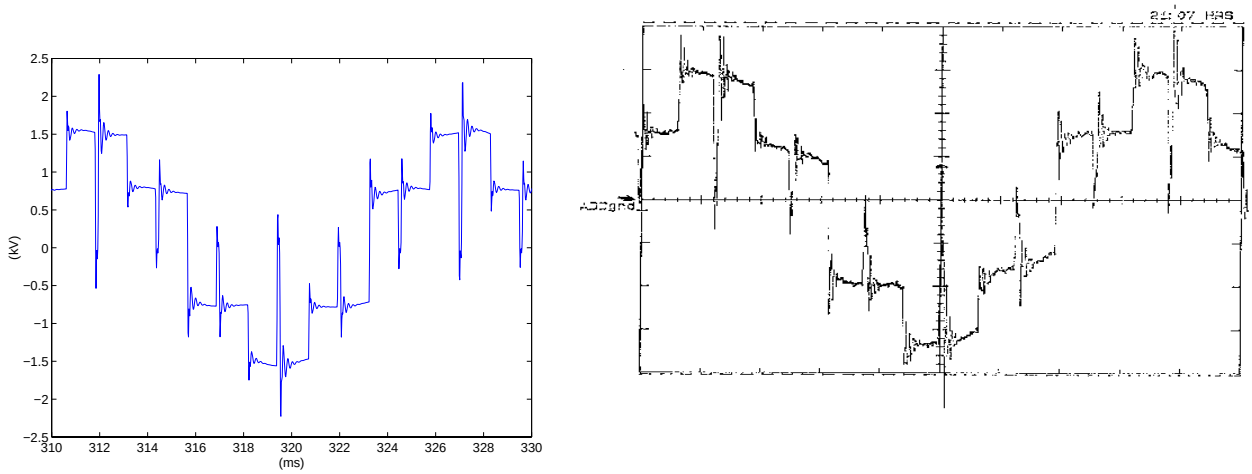

(a) Simulated

(b) Experimental (vert. 500V/div, hor. 2ms/div)

Fig. 6. Cable Input Voltage – System with PWM-VSI

works was made possible through a research scholarship from CNPq.

References

[1] A. C. S. de Lima, R. Stephan e A. Pedroso, "Modelling the electrical drive system for oil exploitaition", in *IPST'97 – International Power System Transients Conference*, pp. 234–239, Jun 1997.

[2] J. Bentley e P. Link, "Evaluation of motor power cables for pwm ac drives", *IEEE Trans. on Ind. Appl.*, vol. 33, no. 2, pp. 342–358, Mar 1997.

[3] R. O. Råd e T. Henriksen, "Converter fed sub-sea motor drives", *IEEE Trans. on IAS*, vol. 32, no. 5, pp. 1069–1079, Sept 1996.

[4] A. Pomilio, C. de Souza, L. Matias, P. Peres e I. Bonatti, "Alimentação remota de motores submersos", in *XI CBA – Congresso Brasileiro de Automática*, pp. 791–796, SBA, Set 1996.

[5] R. Manhaes, "Formulação e cálculo dos parâmetros elêtricos de um sistema de cabos em função da freqüência", tese de M.Sc, Escola Federal de Engenharia de Itajubá, 1983.

[6] C. Portela, "Ondas cilindricas", tech. rep., COPPE/UFRJ, 1991.

[7] Y. Yin, *Calculation of Parameters of Electrical Cables Using Finite Element Method.* PhD thesis, University of British Columbia, 1994.

[8] H. Dommel, *EMTP Theory Book.* MicroTran Power System Analysis Corporation, 1992.

[9] L. Marti, "Simulation of transients in underground cables with frequency-dependent modal transformation matrices", *IEEE Trans. on Power Delivery*, pp. 1099–1110, Jul. 1999.

[10] J. A. Martinez(Editor), *Computer Analysis of Power System Transients – Selected Readings.* IEEE, 1997.

[11] R. Kerkman, D. Leggate e G. Skibinski, "Interaction of drive modulation and cable paramenters on ac motor transients", *IEEE Trans. on Ind. Appl.*, vol. 33, no. 3, pp. 342–358, May 1997.