AUTOMATION OF A DATA COLLECTION SYSTEM FOR PHOTOVOLTAIC PANELS

Prof. Lauro de Vilhena Brandão Machado Neto*,
Prof. Elizabeth Marques Duarte Pereira**, Prof. Roberto Schirm**
Ana C. de A. T. Paiva**, Luís G. M. Oliveira**, Nélio B. Bastos**,
Flávio M. T. da Silva*, Helvécio B. de Oliveira*,
Ivo H. de Pádua*, Rodrigo C. Ivo*

Group of Studies in Energy - PUC MINAS (GREEN)
*Laboratory of Power Electronics
Department of Electronic Engineering - PUC Minas
Av. Dom José Gaspar, 500, P. 03, S. 104,
30.535-610, Belo Horizonte, MG, Brasil,
Tel. 55 31 319 4115 Fax 55 31 319 4224 Email: lvilhena@pucminas.br

**Laboratory of Solar Energy
Department of Mechanical Engineering - PUC Minas
Av. Dom José Gaspar, 500, P. 19, 30.535-610, Belo Horizonte, MG, Brasil,
Tel. 55 31 319 4387 Fax 55 31 319 4225 Email: green@pucminas.br

***Abstract* - In this paper are presented procedures and tools for the characterization of PV panels. First wave shapes from the manufacturer, manual collections and a model for the panel are presented. An Automated system for the datum's collections is presented. Acquisitions are executed, following the variation of the cyclical load and the results are shown in the form of wave's surfaces. Then a software for the drawing of the waves obtained from the datum collections is presented. The program makes use of the Recursive Least Square Algorithm (RLSA).**

I. INTRODUCTION

Solar Energy has proved one of the cleanest renewable forms of energy. Photovoltaic Systems, despite their low efficiency and high cost, have attracted attention, as the efficiency rate in photovoltaic conversion tends to rise, while advances in Microelectronics and Power Electronics tend to lower costs. Therefore, it will be possible to use photovoltaic systems in the decentralized generation of electric power. The Group of Studies in Energy of PUC MINAS (GREEN) intends to create a research and development line in the field of Photovoltaic Systems.
Our aims are:

- To present to the public, the industry and the government at municipal, state and federal levels the benefits of using Photovoltaic Systems;
- To research into, develop and manufacture hardware and software material to characterize Photovoltaic Panels;
- To research into, develop and manufacture prototypes of Power Conditioners for Photovoltaic Panels;
- To research into, develop and manufacture prototypes of Smart Photovoltaic Systems;
- To research into, develop and manufacture prototypes for Photovoltaic Systems with rural applications.

This paper concerns procedures and tools for the characterization of Photovoltaic Panels. The first part presents the characteristic waves provided by the manufacturer, a manual data collection and the panel modeling based on its physical properties. However, the procedure proved inaccurate and tedious. The manufacture of an automated system for statistic data collection and handling for Photovoltaic Panels is then proposed, representing the second stage of the project.

With basis on this information, a software was elaborated making use of C++ Builder for the design of characteristic waves obtained in automation collection. For parameters estimation is used the Recursive Least Square Method.

II. PHOTOVOLTAIC PANEL

The Photovoltaic Panel used is manufactured by KIOCERA. Fig. 1 presents a *VxI* feature of a 45.3 Multicrystal Solar Module, and Table 1 contains electric and physical parameters.

Manual data collection was carried out for the design of characteristic curves. This procedure aims basically at checking the curves provided by the manufacturer. It also has a didactic nature, helping students in their first contact with Photovoltaic Power Conversion.

In order to determine the range of dynamic operation for panels, a curve family was designed. This will allow designers of Power Conditioners for Photovoltaic Panels a simplification of the control system. Fig. 2 shows a curve family covering a wide radiation range, and below we present the parameters for Characteristic Curves. In each collection, the variation of radiation equals, at best, 20 W/m^2.

The procedure is inaccurate, as can be seen from the result, unable to determine the parameters for Characteristic Curves precisely in function of radiation.

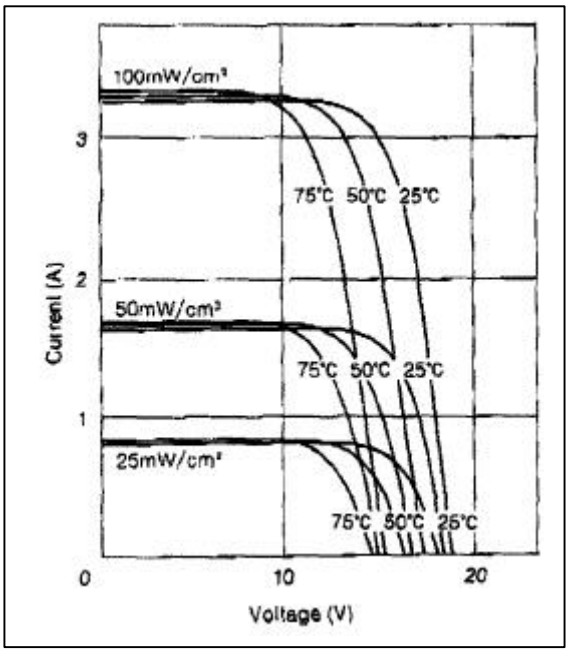

Fig. 1. *VxI* feature of a 45.3 Multicrystal Solar Module (KIOCERA).

TABLE I
ELECTRIC AND PHYSICAL PARAMETERS

Electric Parameters		
Output Power		45.3 W
Optimal Current	3.02 A	
Optimal Voltage	15.0 V	
Short Circuit Current		3.25 A
Open Circyurt Voltage	18.9 V	
Note: Equal incidence at 100 mW/cm^2, 25°C And air mass 1.5 spectrum.		
Physical Parameters		
Lenght		880 mm
Width		445 mm
Height		36 mm
Weight		5.3 Kg

Based on the physical features of semiconductors, the panel modeling was determined. The main equations are presented below:

$$J = K1 * l - K2 * e^{(a*V - b*T - g)} \quad (1)$$

$$V = \frac{1}{a} * \left[\ln\left(\frac{l}{K} - \frac{J_p}{Acel} \right) + b*T + g \right] \quad (2)$$

$$V_p = \sum_{j=1}^{Ncel} V_j - N_{cel} * R_S * J_p \quad (3)$$

$$V_p = \left[\sum_{j=1}^{Ncel} \left[\frac{1}{a_j} * \left(\ln\left(\frac{l_j}{K_j} - \frac{J_{pj}}{A_{cel}} \right) + b_j * T_j + l_j \right) \right] \right] - N_{cel} * R_S * I_p \quad (4)$$

- J = current density (mA/Cm^2);
- V = voltage in the cell (V);
- $K1$ = admeasuring of proportionality between J and λ in the linear region (current generator);
- $K2$ = 1 mA/Cm^2 value adjustment constant;
- l = incident luminous intensity (mW/Cm^2);
- a = voltage coefficient (1/V);
- b = temperature coefficient (1/C°);
- g = admeasuring for curve adjustment in the region where the cell may be considered a voltage generator variable according to temperature;
- $Ncel$ = total number of cells in series;
- Rs = contact resistance.

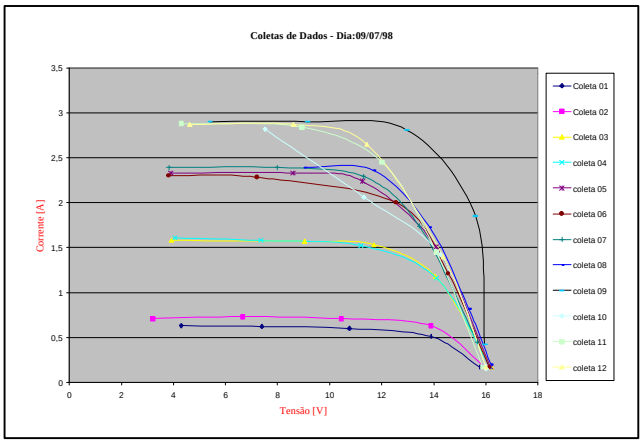

Fig. 2. Manual Datum Curve Family

TABLE II
PARAMETERS FOR CHARACTERISTIC CURVES

	Radiation	Temperature	I_{SC}	V_{OC}
Collection 1	213,56	28,5	0,64	16,72
Collection 2	245,23	28,5	0,76	16,84
Collection 3	511,00	36,5	1,60	16,95
Collection 4	524,45	35,0	1,63	16,88
Collection 5	688,81	44,0	2,34	16,9
Collection 6	719,89	42,0	2,30	16,89
Collection7	773,65	36,0	2,34	17,13
Collection8	811,57	43,0	2,50	17,04
Collection 9	835,41	48,5	2,07	16,58
Collection 10	886,92	48,0	2,84	16,74
Collection 11	902,34	50,0	2,76	16,50
Colelection 12	921,67	48,0	2,87	16,80

III. AUTOMATION SYSTEM

The following system was developed and manufactured for the automation of data collection and statistic handling procedures: a dc/dc converter allows the electronic control of resistive load imposed on the Photovoltaic Panel. A microcomputer makes the cyclical control of the panel load variation through a digital/analog converter, a Pulse Width Modulator (PWM) and a driver for the dc/dc converter switcher, consisting of a MOSFET. A diagram of the system is presented in Fig. 3.

Fig. 4 presents the electronic circuit diagram and Fig. 5 contains the wave forms of current reference (resistance) imposed on the panel, the PWM and the current on the Photovoltaic Panel.

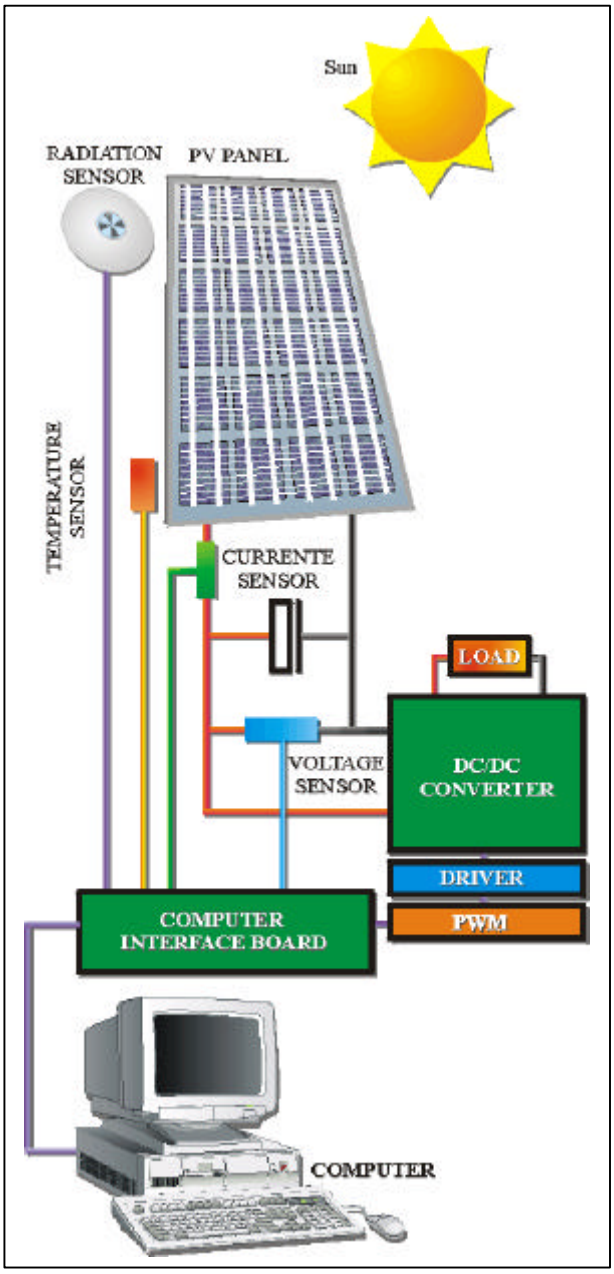

Fig. 3. Automation System Diagram.

The software used were Design Architect and AccuSim II, by Mentor Graphics Corporation (Agreement Mentor Graphics - PUCMINAS).

A Data Acquisition System, through sensors, allows the design of the following parameters on the panel: Luminous incidence, temperature, voltage and current. The acquisitions are cyclic, following the cyclic variation of load resistance on the panel.

Fig. 6 shows the characteristic curves obtained with the automatic system. This diagram contains voltage in function of the current making use of radiation as parameter.

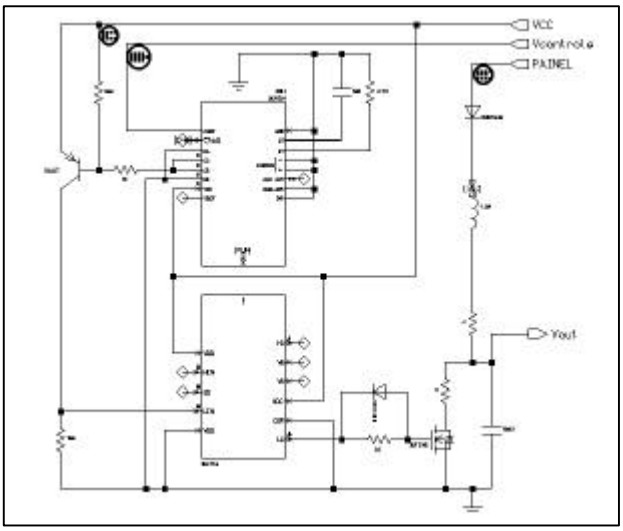

Fig. 4. Electronic System Diagram (Mentor Graphics Corporation).

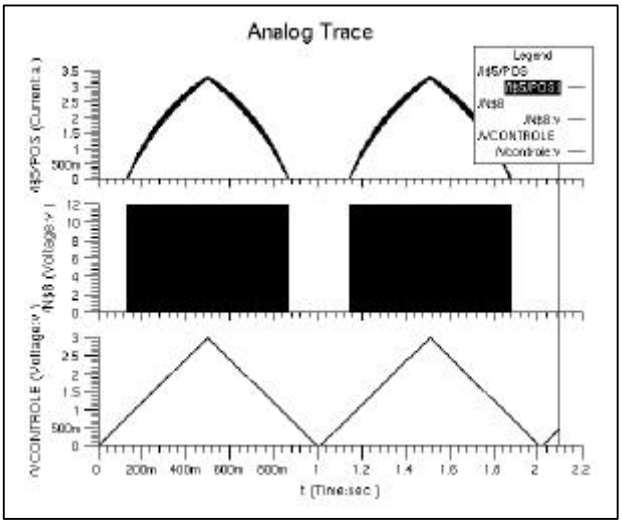

Fig. 5. Current Reference, PWM and Current on the Panel (Mentor Graphics Corporation).

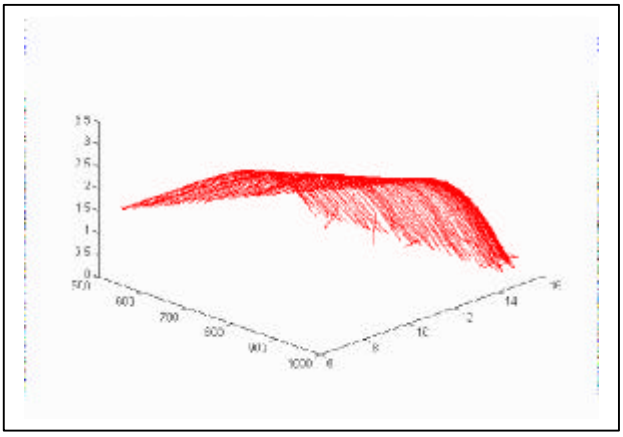

Fig. 6. Surface in the Voltage X Current X Radiation Space.

Some photographs of the Automation System are shown in Fig. 7, Fig.8 and Fig. 9.

Fig. 7. Pyrheliometer.

Fig. 8. Automation System.

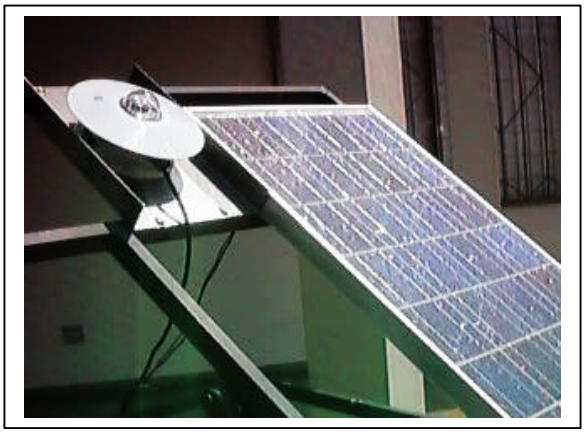

Fig. 9. PV Panel and Pyrometer.

IV. PARAMETERS ESTIMATION

With basis on collected data, a C++ Builder based software was implemented for the plotting of characteristic curves, based on the Recursive Least Square Algorithm. Fig. 10, 11, 12 e 13 displays windows of the designed software.

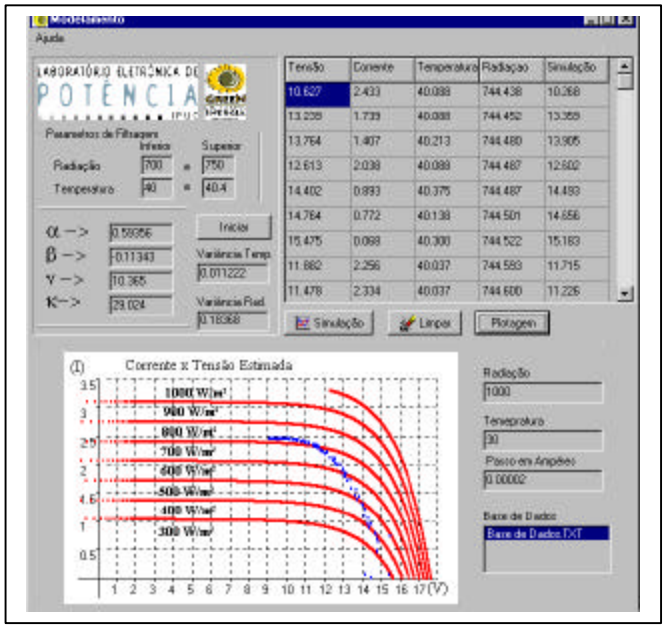

Fig. 10. Window Software I

The figures shows estimated families curves for the PV panel, for variations in temperature and radiation. The parameters were estimated considering the datum collected by the automation system.

The Fig. 10 has a temperature of 30 °C and a radiation range of 300 W/m² to 1000 W/m².

The Fig. 11 has a radiation 900 W/m² and a range of temperature of 20 °C to 60 °C.

In the Fig. 12 and 13 were used another interval of the datum collection.

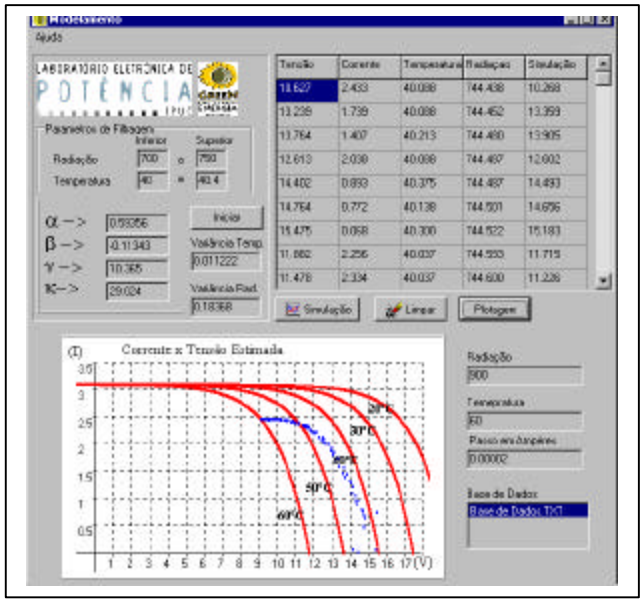

Fig. 11. Window Software II

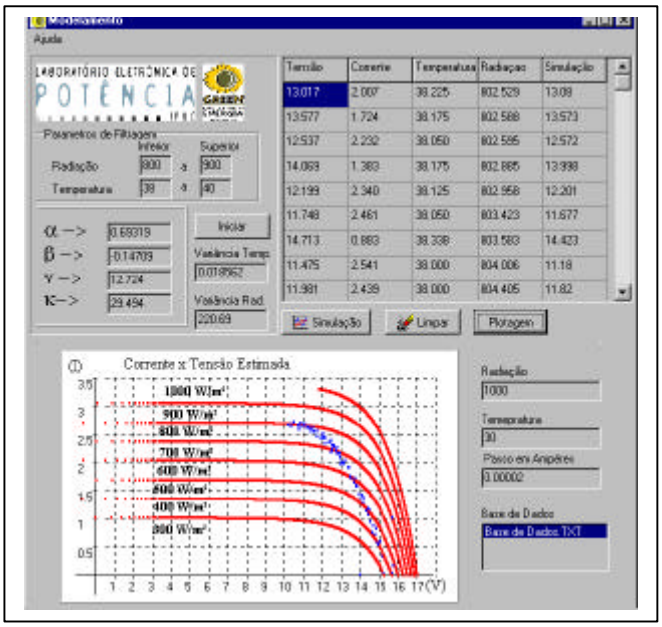

Fig. 12. Window Software III.

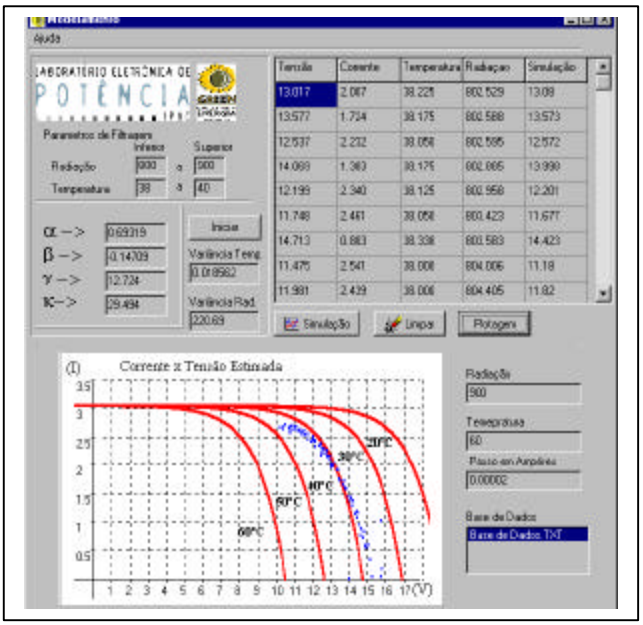

Fig. 13. Window Software IV.

V. CONCLUSION

The Automation of the Data Collection System for Photovoltaic Panels allowed an effective statistic data handling, impossible through manual collection. The electronic system plus the software respond to the dynamics of the Photovoltaic Panel. This system provides subsidies to designers of Electronics Systems using Photovoltaic Panels as feeding source.

It was presented the integration of the whole automatic system, automatic report making and estimation of the Photovoltaic Panel Parameters with the use of RLSA.

For furthers studies: influence of Direct and Diffuse Radiation and simulation of the whole automatic system using the softwares Design Architect, AccuSim and/or Continuum (Mentor Graphics Corporation).

VI. BIBLIOGRAPHY

[1] Ljung, L., "System Identification-Theory For The User", Prentice-Hall, 1987.

[2] Franceschetti, N. N. et alli., "Modelagem e Simulação da Transferência de potência de um Sistema Fotovoltaico. Anais do IV Congresso Brasileiro de Eletrônica de Potência; pp. 275-280, Belo Horizonte, 1997.

[3] Green, M. A., "Solar Cells: operating principles, technology and system application", Prentice-Hall, 1982.

VII. ACKNOWLEDGEMENT

To Mentor Graphics Corporation (Agreement Mentor Graphics –PUC-MINAS)