DELTA-H MODULATOR

Wail Metzker Pastorello Filho and Arnaldo José Perin

Federal University of Santa Catarina – Dept. of Electrical Engineering
INEP - Power Electronics Institute – P.O. Box 5119
88040-970 – Florianópolis – SC – Brazil
Phone: (+55) 48 331 9204 - Fax: (+55) 48 234 5422 – e.mail: arnaldo@inep.ufsc.br

Abstract - This work presents a study with emphasis on modulation principles. It revisits the concepts of Delta and Sigma-Delta modulators and merges then into a hybrid modulator - the Delta-H modulator. The analysis of this new modulator considers demodulation the ideal way to recover modulated signals. Delta-H operation and model are detailed here. This modulator is better suited to systems operating at frequencies higher than the supply frequency. Finally, an audio amplifier is suggested as a possible application. Simulation results verify the description and operation of this model, with an excellent performance in the suggested application.

I. INTRODUCTION

Most studies in Power Electronics deal basically with conversion processes. These converters work with great power amounts, in variated combinations between AC and DC modes. Input and output AC frequencies ordinarily are never higher than the supply's frequency (usually 60 Hz). There are few works with generic non-sinusoidal current and voltage waveforms, and at higher power levels. Also, many of the approaches to this subject need conceptual refinement. The present work analyses concepts, modeling and topological description of a converter with a generic output waveform. Such structure is capable of reproducing functions at frequencies higher than supply and with high fidelity, even at high output power level. Practical applications range from active filtering and power function generation, to audio amplifiers.

II. BASIC CONCEPTS

Basically, modulation can be described as two different signals combined for information transmission. The first signal is the information for transmission and is called envelope. The other signal is the carrier signal and transmits the information or envelope.

In the signal analysis point-of-view, modulation is directly related to the frequency shift property. Modulation shifts the frequency spectrum - so the output frequencies in a modulator are different of the input frequencies. The frequency shifts purpose is to use the better transmission characteristics present in higher frequencies.

Modulation is associated to non-linear operation and normally achieved through the algebraic product of the two functions. It is not possible to achieve modulation through non-time-variant linear systems because the output response of these systems produces frequency identical to the input. However, modulation can be achieved through time-variant linear systems. These systems are present at switching systems, largely used in Power Electronics. [3].

Fundamentally, there are two basic kinds of modulation accordingly to the carrier waveform. The continuous wave modulation is done through a carrier with a pure sinusoidal waveform. Pulse modulation is done with a train of periodic pulses. Modulation is also classified accordingly to the way information is incorporated to the carrier. The principal forms are AM - Amplitude Modulation, and FM - Frequency Modulation.

Both can be used in applications, either as continuous modulation or pulse modulation. Besides these basic forms, modulation can be achieved varying pulse width, pulse frequency or both.

The term Pulse-Frequency Modulation is neither usually described nor used. This work introduces it in order to differ from other pre-existing modulation forms. This modulation characteristic is the energy processing through carrier period length variation. The pulse width is constant, hence the energy carried in each period is also constant. Although energy in each period is constant, the average power value varies accordingly to the modulation interval in each period.

III. DELTA MODULATOR [1], [2].

One of the most common examples of Pulse-Frequency Modulation is presented in Delta Modulation [1] and [2]. This type of modulation is exactly as described previously. A finite and constant energy amount is processed in a rate (frequency) defined by the information (modulation signal).

In Fig. 1, a block diagram of a Delta Modulator is presented. A sample and hold block takes the error e(t). The sampled error e*(t) corresponds to the actuating signal u(t). This signal, u(t), is injected to the limiting block, which defines a constant level for each output pulse with a corresponding algebraic signal. The level of each pulse is constant from the beginning to the end of a sample when its value is refreshed. The fixed sample rate (frequency) defines the pulse width and the maximum modulation frequency. This frequency is a half the sample rate. Finally, after the limiting block output the pulse modulated command function s(t), is obtained.

The Delta Modulator's main characteristic is the output of the integrator block. This block input is a two-level discrete signal from $v_S(t)$. After integration, the output average signal is a reproduction of the reference signal, $v_{Ref}(t)$. The integrated instantaneous value of the signal $v_Q(t)$ will have better fidelity to the reference signal waveform with the increasing of the sample and hold command frequency f_c.

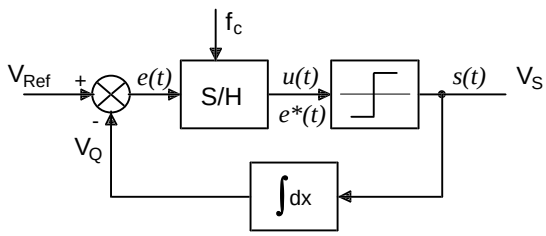

Fig. 1. Block diagram of the DELTA Modulator.

IV. SIGMA-DELTA MODULATOR [2].

Another example of Pulse-Frequency Modulation is the Sigma-Delta Modulation [2]. This modulator is very similar to the previous and shows the same functional blocks. Its main characteristic is at the integrator block input. The error signal, e(t), is the subtraction of the reference signal, $v_{Ref}(t)$, and the output voltage, $v_S(t)$. The output voltage is a discrete pulse train and the reference is a constant signal, so the subtraction of both signals is an amplitude and frequency modulated signal. The Sigma-Delta modulator is depicted in Fig. 2.

V. DELTA-H MODULATOR

The proposed modulator in this study, the DELTA-H Modulator, is hybrid from the DELTA [1], [2] and SIGMA-DELTA [2] modulators. This modulator shows the main characteristics from both previous modulators, merging the two from a common point.

Fundamentally, the DELTA and SIGMA-DELTA modulators show four basic blocks. These blocks perform addiction, integration, sample and hold and limiting. The DELTA-H modulator is based on the way each block performs these basic functions.

For the DELTA-H modulator analysis a full-bridge power converter was chosen. An inductor and a resistor in a series association necessarily form the load. This restriction comes from the converters characteristic output current.

Fig. 3.a shows this bridge converter topology. Fig. 3.b shows an adapted model.

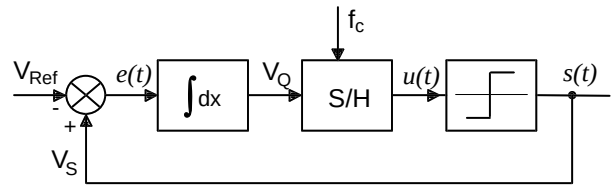

Fig. 2. Block diagram of the SIGMA-DELTA Modulator.

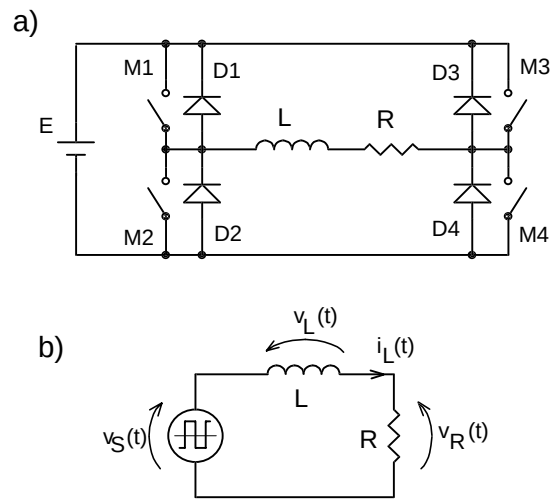

Fig. 3. The bridge converter. a) Topology and b) Adapted model.

For this analysis a fundamental consideration is made. Because this converter has an output characteristic of a current source, it can be assumed that the voltage waveform, in the resistive portion of the load, is the same as the current-reference signal. Then, exclusively for modeling, the resistive portion of the load can be considered as a time-variant voltage source, $v_{Ref}(t)$.

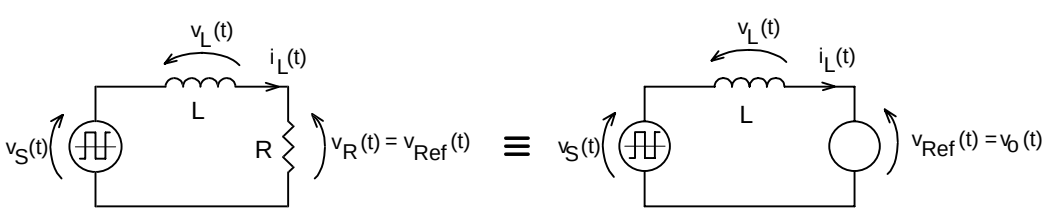

Fig. 4. Redefined model of the bridge converter.

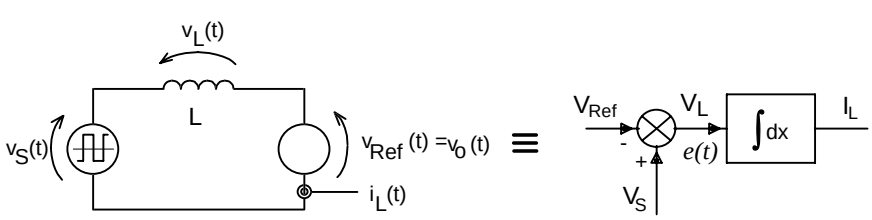

Fig. 5. Equivalence between models of the bridge converter.

The proposed model in Fig. 3.b is redefined and adapted to this consideration and presented in Fig. 4. Notice in Fig. 5 that the integrative characteristic of inductor L establishes equivalence between the electric model and the controller block. This equivalence shows that the block diagram corresponds to the SIGMA-DELTA modulator previously described.

In the electric model, the inductor integrative characteristic changes variables to guarantee the dimensional relation between input voltage and output current of this element. The complete DELTA-H modulator model is obtained through the DELTA modulator blocks, which are responsible for the current waveform imposition, $i_L(t)$. Fig. 6 shows this model and Fig. 7 shows the equivalent functional blocks.

Like the DELTA modulator, the current reproduction in the DELTA-H modulator will increase in quality proportionally to the sampling frequency f_c.

From the model and proposed analysis, at Fig. 7 the corresponding parts of DELTA and SIGMA-DELTA modulators and their fusion around the integrator block can be distinguished. Therefore, the power converter basis comes from SIGMA-DELTA modulator while the control loop is originated from the DELTA model.

VI. Demodulation

Demodulation is the complementary process of Modulation. Demodulation is used to recover the information from a modulated function. The recovering process used in Power Electronics is exclusively the modulated function filtering. All modulation processes used in Power Electronics carries energy at low frequencies. The information recovering in this frequency range is possible using a low-pass filter. It restricts the analysis since the filtering process, though a quite simple solution shows barely acceptable results.

Some frequency-modulation processes do not have energy at the same spectrum range as the information. In these cases, the exclusive use of a filtering element shows poor results. The information can only be recovered through demodulation.

In the latter, the energy spectrum is shifted from the carrier frequency range to the information range. This process can be refined then through filtering, similar to the exclusively filtering processes.

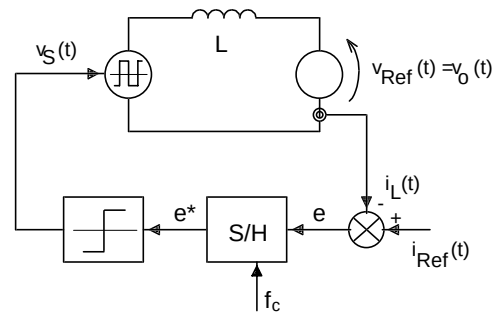

Fig. 6. Model of the Delta-H modulator.

This analysis aims to separate the main differences among the filtering and demodulation processes. Although they show very close models, a distinction and characterization of both processes is necessary. A low-pass filter is associated to lower frequencies, that is, lower dynamics. A demodulator, though, is associated to higher frequencies, that is, very fast dynamics. Hence, a distinction between both elements is necessary to obtain the best performance of each system.

In the DELTA-H modulator introduced in this study, the inductive element at the power circuit acts basically as an integrator block. This block performs at each switching period the algebraic integrate of the voltage discrete function, defining a continuous average value to the current function. The relation between voltage and current is purely linear. Though integration is also linear, it can be applied to demodulation since this system is time-variant.

VII. Application

The DELTA-H modulator is here applied to a low frequency audio amplifier, that is a bass and sub-bass amplifier. The analysis of its performance in this application is frequency-limited to f_o=400Hz. The sample rate (frequency) was defined to f_c=400kHz, limiting the maximum modulation frequency to 500 times the higher response frequency. The signal used for performance evaluation is a 400Hz sinusoidal function. It is considered an average power dissipation at load around of P_o=500W.

Unlike the conventional audio power amplifiers, the dissipated power is directly proportional to the load impedance. That is, at same operation conditions, a load impedance of Z_o=8Ω dissipates more power than a Z_o=2Ω load. This is due to the output characteristic, which is of a current source.

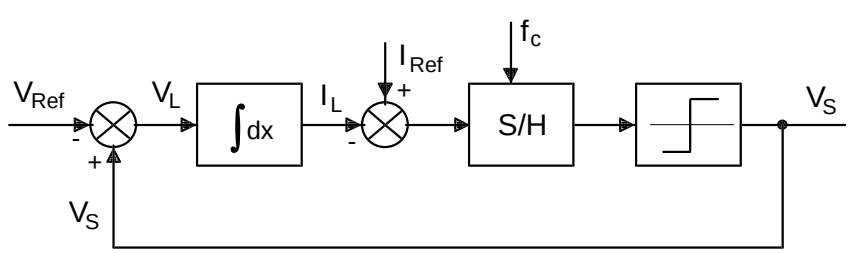

Fig. 7. Delta-H Modulator block diagram.

The load impedance of this application was Z_o=8Ω and the sinusoidal output current was defined I_{oRMS}=8A. Besides, sinusoidal output voltage was established V_{oRMS}=64V. Summarizing.

$$P_o = 500 \text{ (W)} \tag{1}$$

$$V_{oRMS} = 64 \text{ (V)} \tag{2}$$

$$I_{oRMS} = 8 \text{ (A)} \tag{3}$$

$$Z_o = R_o = 8 \text{ (}\Omega\text{)} \tag{4}$$

$$f_o = 400 \text{ (Hz)} \tag{5}$$

$$f_c = 400 \text{ (kHz)} \tag{6}$$

The output voltage of V_{oRMS}=64V corresponds to a peak-voltage of V_p=90V, approximately. This peak voltage is important to the Modulation Index (MI). It is defined as the ratio between the maximum sinusoidal voltage output and the DC input voltage source. Thence:

$$MI = \frac{V_p}{E} \tag{7}$$

In this study, the MI is directly related to the converters dynamic operation. As the Modulation Factor approaches to the unit, the operation dynamics becomes slower and therefore reducing the operation frequency. With this in consideration, the adopted MI varies from 0.6 to 0.7. This project parameter is fundamental because it provides excellent operation behavior even during possible fluctuations in the input voltage source. Since the output voltage depends only on the reference signal, $i_{Ref}(t)$, the MI adjusts automatically to quiescent point variations. This characteristic assures high immunity to distortion of the output signal due to input source variations.

Other important parameter to consider for the power circuit design is the value of the output inductor L, though it is not critic. The chosen value of this inductor must be a compromise between the maximum current rate at the converter output and a low current ripple of the same signal. The maximum current rate happens when the sinusoidal waveform assumes a null value. In this condition, the inductance value is determined by the input source. Hence:

$$\frac{di_o(t)}{dt}\Big|_{t=0} = 2 \cdot \sqrt{2} \cdot \pi \cdot f_o \cdot I_{oRMS} \text{ (A / s)} \tag{8}$$

$$L_{(\max imum)} = E \cdot \frac{dt}{dI_o} \text{ (H)} \tag{9}$$

This theoretical value of the inductance was chosen for an input voltage source of E=140V. A slightly lower inductance value is adopted in the project. The results follow:

$$\frac{di_o(t)}{dt}\Big|_{t=0} = 28{,}400 \text{ (A / s)} \tag{10}$$

$$L_{(\max imum)} = 4.9 \text{ (mH)} \tag{11}$$

$$L_{(adopted)} = 2.0 \text{ (mH)} \tag{12}$$

The inductance just works as an integrative constant, and so its value is not critic. The inductance value adopted gives a current rate two times greater than the designed one. The current rate value was used as design criteria, to guarantee a converter safety operation.

The linearity is the most important characteristic of the inductor. It must not reach the saturation to avoid distortion on the current waveform. To achieve this condition it should be used an inductor with air gap.

The maximum current ripple happens at the output current peak. In other words, the maximum current ripple happens when the sinusoidal waveform assumes its maximum absolute value. The current ripple is proportional to the MI and inversely proportional to the sampling frequency fc. Hence:

$$\Delta I_o = \frac{(1 + MI) \cdot E}{f_c \cdot L} \text{ (A)} \tag{13}$$

$$\Delta I_o = 0.295 \text{ (A)} \tag{14}$$

This value was verified through the converter numeric simulation. The maximum current ripple obtained was equal to ΔI_o=289.5mA. Fig. 9 depicts a current waveform detail where this value was determined.

VIII. Simulation

This modeling was confirmed through numeric simulation. The parameters previously determined were used in the power circuit at the sampling frequency f_c=400kHz and output frequency f_o=400Hz.

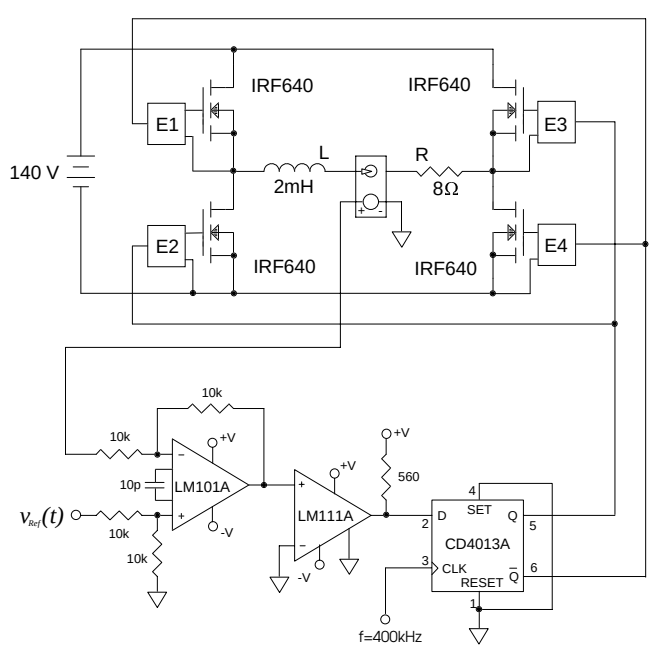

Fig. 8. Circuit used to obtain the simulation results.

The converter was simulated through a circuit simulator (Pspice). The models of the components used are as far close to the real as possible. The circuit used is showed in Fig. 8. The results are presented in Fig. 9 to 13.

The output current and voltage waveforms are depicted at Fig. 10. Fig. 11 depicts the reference signal and output current waveforms. It can be seen that the current output waveform is practically identical to the reference.

Output current ripple is minimal compared to the high frequency average value. Besides, the speaker can easily filter this ripple. Fig. 12 depicts output current and reference signal spectra at audible frequency range. Fig. 13 depicts output current harmonic spectrum at the sampling frequency limits range.

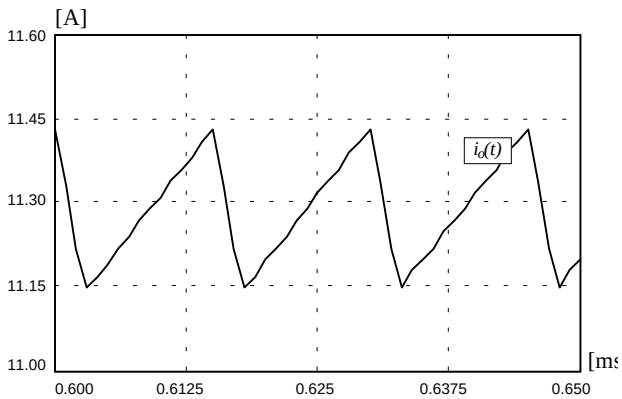

Fig. 9. Output current detail.

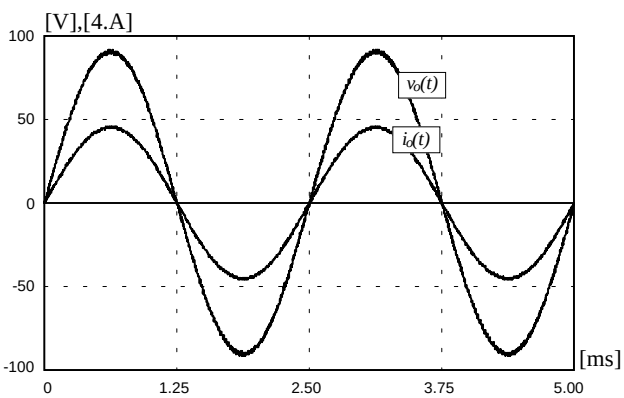

Fig. 10. Output voltage and current waveforms.

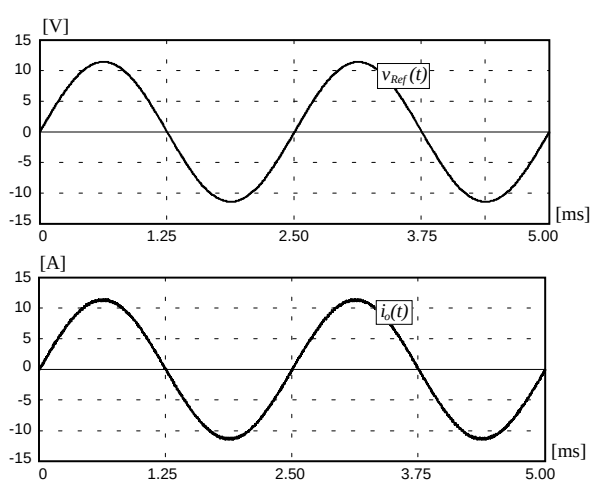

Fig. 11. Reference signal and output current waveforms

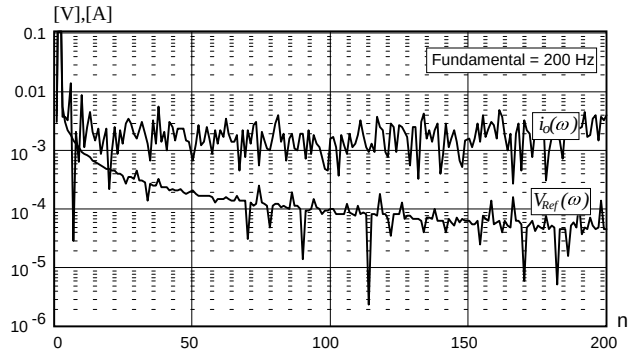

Fig. 12. Audible frequency range spectrum.

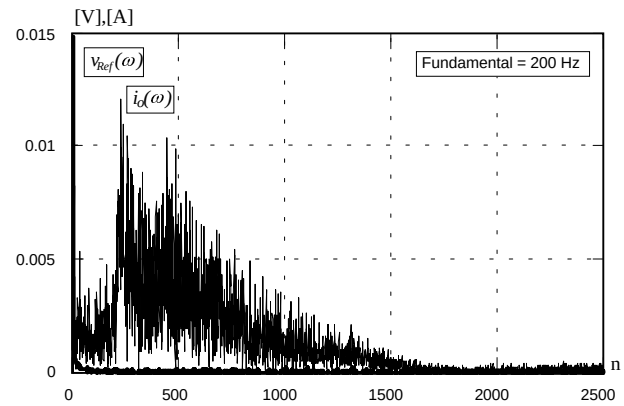

Fig. 13. Sampling frequency range spectrum.

The Total Harmonic Distortion of these signals was calculated, being equal to THD_R%=0.04% (reference waveform) and THD_C%=0,19 (output current waveform). The absolute algebraic difference between these two values results on a THD%=0.15%.

IX. Experimental results

The Delta-H modulation was implemented through experimental prototype. The parameters previously determined were used in the power converter at the sampling frequency f_c=300kHz and output frequency f_o=400Hz. The circuit used is very similar to that in Fig. 8. Some functions were implemented to provide dead time and power MOSFET driver. A slightly lower sampling frequency was chosen to reduce the noise in the reference signal. The converter performance was verified to an output active power of P_o=250W, which is a half of the designed nominal power. The results are presented in Fig. 14 to 17.

The converter reference signal and output current waveforms are depicted at Fig. 14. It can be seen that the current output is tracking the sinusoidal reference signal. Fig. 15 depicts the output voltage and current waveforms. The value read on the auxiliary channel must be multiplied by a scale factor of 0.5A/mV, at both figures.

Fig. 16 depicts reference signal and output current spectra, at audible frequency range. The Total Harmonic Distortion of these signals was calculated, being equal to THD_R%=4.81% and THD_C%=4.94%. The absolute algebraic difference between these two values results on a THD%=0.13%.

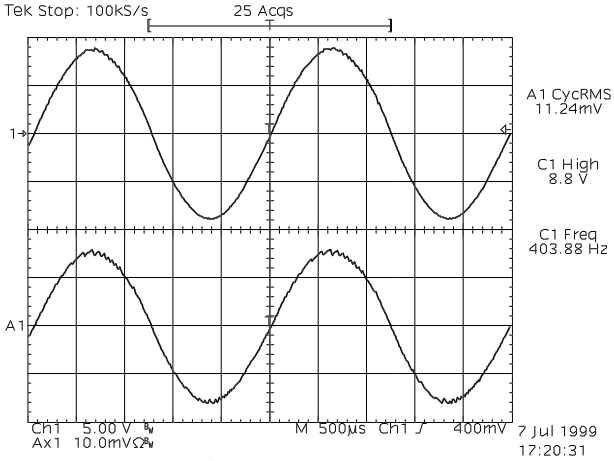

Fig. 14. Reference signal and output currente.

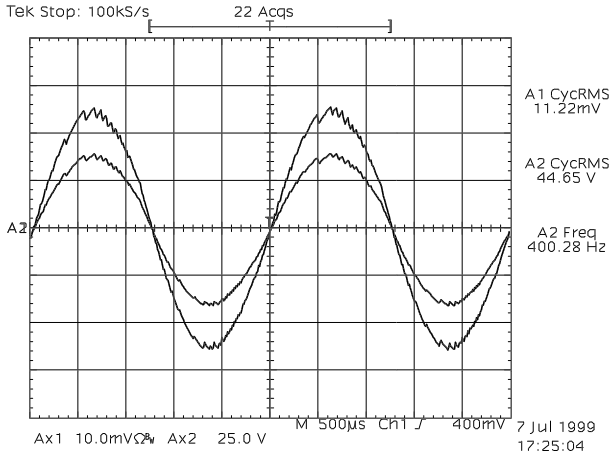

Fig. 15. Output voltage and current waveforms

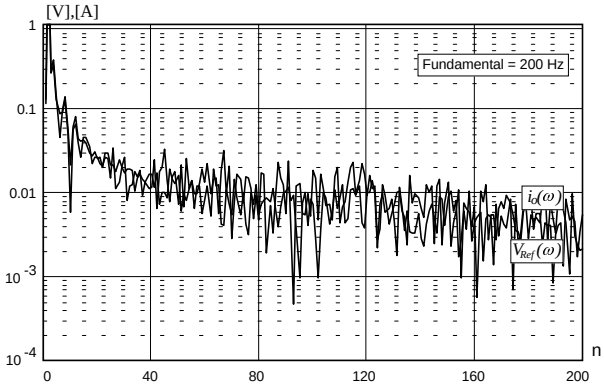

Fig. 16. Reference and output current spectra at audible range

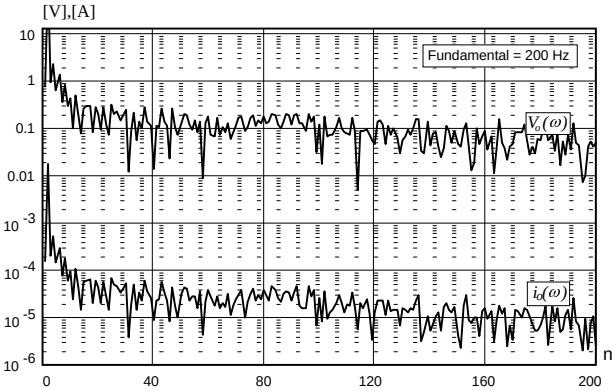

Fig. 17. Output voltage and currente spectra at audible range

Fig. 17 depicts output voltage and current harmonic spectrum at audible frequency. The corresponding Total Harmonic Distortion of these signals are THD_V%=3.92% and THD_C%=3.90%.

X. Conclusion

The circuit's simplicity and its control strategy ensure the stability of the system. The sampling frequency fc=400kHz is suitable to modern power devices. This modeling based on modulation and demodulation does not need output filters. The use of generic waveforms as reference signal yields a new field in Power Electronics. The switching audio amplifier introduces a new use for Power Electronics concepts. The results obtained through simulation and experimental prototype show an excellent performance. The calculated harmonic distortion for both spectrum is lower than THD%=0,2%. This distortion is accepted for very low frequency in audio applications.

XI. References

[1] P. D. ZIOGAS, "The Delta Modulation Technique in Static PWM Inverters," *IEEE Trans. Ind. Application*, vol. IA-17, no. 2, pp. 199-204, Mar./Apr. 1982.

[2] M. H. KHERALUWALA and D. M. DIVAN, "Delta Modulation Strategies for Resonant Link Inverters," *IEEE Trans. on Power Electronics*, vol. 5, no. 2, pp. 220-228, April 1990.

[3] B. P. LATHI, *Sistemas de Comunicação*. Rio de Janeiro, RJ: Editora Guanabara Dois S.A., 1979.