Comparison Between the Conventional STATCOM and the PWM STATCOM

Carlos A. C. Cavaliere[1] Edson H. Watanabe[1] Mauricio Aredes[1,2]

[1] Lab. Eletrônica de Potência
PEE/COPPE/UFRJ

[2] Depto. Eletrotécnica
EE/UFRJ

Caixa Postal 68504
21945-970 Rio de Janeiro
carreiro@coe.ufrj.br

***Abstract* - The STATCOM's are FACTS devices that synthesize a practical shunt compensator. There are two types of STATCOM's: the STATCOM and the PWM STATCOM. This work studies the performance of these two compensators generating or absorbing reactive power in a balanced system and in an unbalanced system with zero and negative sequences. Simulations were made for both STATCOM's operating at the above-described conditions. The results show that the STATCOM has a good performance generating or absorbing reactive power in balanced systems. Nevertheless, in the presence of negative sequence components, this compensator operation is compromised. The PWM STATCOM has a better performance in balanced or unbalanced systems, although its operation gets hampered due to the known power losses resulting of the high frequency switching rates.**

I. Introduction

The FACTS concept or Flexible AC Transmission Systems concept was proposed by Hingorani [1] in 1988. This acronym defines a concept where Power Electronics devices are used to provide more flexibility to AC power systems. Flexibility, here, is understood as the capability of a system to respond quickly to the control input and to change in its operating points. Today, there are many types of FACTS devices, but all of them could be described as part of two groups: series or shunt connected devices or combination of shunt and series connection. The main characteristics of these two groups could be described by the ideal series compensator and the ideal shunt compensator, as described in [2], [3], and [4].

An ideal shunt compensator can be considered a voltage source, controlled in magnitude and phase angle, with the same frequency of the system to which it is connected. This type of compensator is able to control the reactive power flow through the connection point through the control of the voltage source magnitude or phase angle. By controlling the reactive power, the shunt compensator also controls the active power flow, regulates the voltage, and improves the stability of the system. When this shunt compensator is synthesized by Power Electronics devices, it is called the Static Compensator or just STATCOM.

There are two types of Static Compensator: the conventional STATCOM and the PWM STATCOM. The conventional STATCOM, hereafter, will be called just STATCOM. Both types of STATCOM are composed by an inverter connected to a capacitor in its dc side and transformers in the ac side. The transformers are used to connect the inverter to the ac grid. The main difference between these two types of STATCOM is in the control methods. Figure 1 shows the block diagram of a 12-pulse STATCOM based on two 6-pulse converters, the transformer and the control block. Figure 2 illustrates the block diagrams of a PWM STATCOM, consisting of a 6-pulse converter, the transformer and the control block, which is based on the instantaneous power theory.

II. Objectives

The objective of this work is to analyze the performance of these two compensators generating or absorbing reactive power in a balanced system or in an unbalanced system with zero and negative sequence components. The structures that compose the STATCOM and the PWM STATCOM and their associated controls were studied. Simulations using the ATP, *Alternative Transients Program*, were made for both types of compensators.

III. The Conventional STATCOM

In the STATCOM, the control is done at low switching frequency of the inverter. In this equipment, the reactive power is generated or absorbed through the control of the

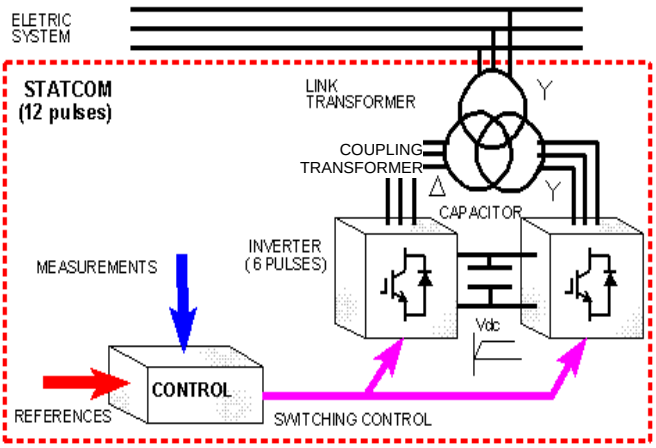

Fig. 1. STATCOM (12 pulses).

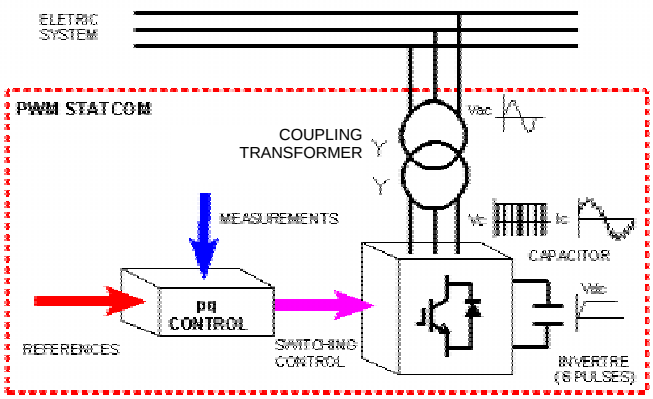

Fig. 2. PWM STATCOM.

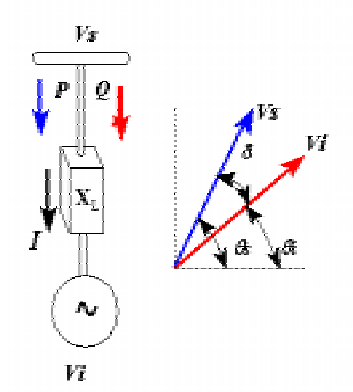

Fig. 3. Simplified diagram for the ac grid and the STATCOM

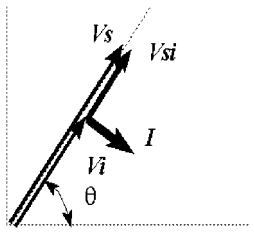

Fig. 4. Vs > Vi.

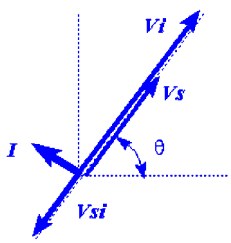

Fig.5. Vs < Vi.

circuit, where ***Vs*** represents the ac grid voltage, ***Vi*** represents the inverter ac side fundamental component voltage, and X_L represents the equivalent reactance between these two voltage sources. This figure shows, also, the phasor diagram for this circuit. The active power flow between these two voltage sources and the reactive power are well known [5] and given by:

.

$$P_s = \frac{Vs.Vi}{X_L}.\sin\delta \qquad (1)$$

$$Q_S = \frac{V_S}{X_L}(V_S - V_i.\cos\delta) \qquad (2)$$

From (1) and (2) it is observed that when the ac grid voltage $\boldsymbol{V_s}$ and the STATCOM voltage $\boldsymbol{V_i}$ are in phase, i.e., $\delta = 0$, only reactive power will be present. The amount of reactive power and its capacitive or inductive characteristics are given by the difference of the ac grid and the STATCOM voltage amplitude multiplied by $\cos\delta$. In normal operation, the phase between these voltages is zero and there may be three possible cases.

In the first case, the voltage $\boldsymbol{V_s}$ and $\boldsymbol{V_i}$ have the same amplitude, therefore, from (2) there will be no reactive power being generated or absorbed.

The second case is illustrated in Figure 4; the amplitude of the inverter-generated voltage is lower than that of the ac grid. In this case there is a voltage resultant over the reactance, called $\boldsymbol{V_{SI}}$. This induces a current that lags this resultant voltage and the ac system voltage, $\boldsymbol{V_S}$, by 90° degrees. This current is seen by the ac system as an inductive current.

In the third case, illustrated in Figure 5, the amplitude of the inverter-generated voltage is higher than that of the ac system. In this case, the resultant voltage $\boldsymbol{V_{SI}}$ has an opposite direction. Likewise the second case, this resultant voltage induces a current that lags it by 90° degrees, but at the same time, leads by 90° degrees the ac system voltage. So, this current is seen by the system as a capacitive current.

To obtain a controlled voltage over the STATCOM inverter, the pulse amplitude modulation (PAM) technique is used. This control is done at low switching frequency. However, to obtain better voltage waveforms with lower harmonic content parallel connection of inverters and transformers are necessary. In this work, a 12-pulse inverter was considered.

When a change in the reactive power is desired, a change in the amplitude of the generated voltage is necessary. Figure 6 shows a schematic of this relation. The amplitude of the inverter voltage $\boldsymbol{V_i}$ is proportional to the voltage of the dc side capacitor, $\boldsymbol{V_{dc}}$. This voltage is proportional to the amount of the energy stored in this capacitor. By introducing a temporary, small lagging or leading phase shift, called δ, active power flows through the inverter, charging or discharging the capacitor. This charge or discharge affects the dc voltage level and, consequently, alters the amplitude of the inverter ac voltage.

Two blocks make the STATCOM reactive power control. One that calculates the reactive power through the pq theory, discussed in [6], [7], and [8]; and another block that is a PI (proportional - integrator) controller. Figure 7 shows the complete control schematic of the STATCOM.

The pq theory block calculates the reactive power obtained form the measurement of the grid voltages and currents. The references [6], [7], and [8] affirm that in case of steady state and balanced system the instantaneous imaginary power, called q, is equal to the reactive power. The imaginary power q is calculated through the equations described bellow:

$$q(t) = v\beta(t).i\alpha(t) - v\alpha(t).i\beta(t) \qquad (3)$$

Where the α and β voltages and currents are the result of the application of the Clark transformation:

$$\begin{bmatrix} vo(t) \\ v\alpha(t) \\ v\beta(t) \end{bmatrix} = \sqrt{\frac{2}{3}}.\begin{bmatrix} \frac{1}{\sqrt{2}} & \frac{1}{\sqrt{2}} & \frac{1}{\sqrt{2}} \\ 1 & -\frac{1}{2} & -\frac{1}{2} \\ 0 & \frac{\sqrt{3}}{2} & -\frac{\sqrt{3}}{2} \end{bmatrix}.\begin{bmatrix} va(t) \\ vb(t) \\ vc(t) \end{bmatrix}. \qquad (4)$$

The PI controller uses the comparison of the calculated reactive power and the reference reactive power as input and produces a signal that is proportional to the angle δ. This signal is used to control the inverter switching applying the phase displacement in the composed voltage phase in order to charge or discharge the capacitor. Thus changing the capacitor voltage and consequently changing the output reactive power.

When it is not required to change reactive power levels, the inverter control system must ensure that its output voltage is in phase with the ac system voltage. This is done by using a Positive Sequence Detector. This equipment works as a Phase Locked Loop (PLL). It senses the grid voltages and calculates the frequency and phase angle. This information is sent to the switching control so that the waveforms created through the inverter match in frequency and phase angle the grid voltages. Once the

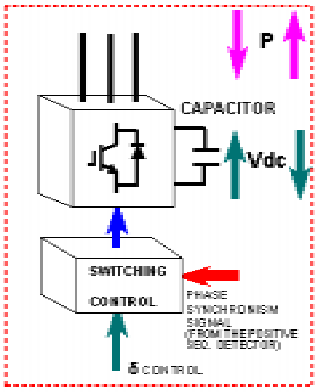

Fig.6. ac/dc voltage control.

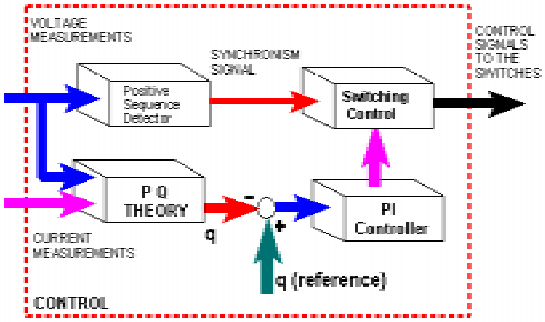

Fig. 7. STATCOM Control System.

voltages are in phase, only reactive power will flow.

A. Simulation of the STATCOM

The model was developed over an 18kV and 400MVA system. The simulation tests were made considering the STATCOM linked directly to an infinite bus. This line of development was made to observe the performance of the STATCOM only.

Simulations were made placing the developed model of STATCOM into systems with balanced voltages first, and then unbalanced voltages. The unbalanced voltages where created by the addition of negative and zero sequence components directly into the bus voltage. Although values of unbalanced systems usually range from 1 to 2% in normal operation, at the simulations made it was added zero and negative sequences with values that range from 1% to 10% of the positive sequence component amplitude.

In all simulations a reference of 0, -50, and +50 Mvar was given to the STATCOM and its response was observed. (The main results of the STATCOM performance are shown in Figures 8 to 11).

B. Results of the STATCOM – Balanced System

Figures 8 and 9 show the results of the STATCOM operating in a balanced system. In Figure 8, the 12-step voltage, the grid voltage (dotted line), and the compensating current are shown. Figure 9 shows the reactive power and the dc capacitor voltage.

These results show that the STATCOM has a good performance in a balanced system. The generated or absorbed reactive power followed well the reference commands with a time delay around 20 ms. When the capacitor voltage increased, the amplitude of the 12 pulse voltage became greater than the ac system voltage amplitude. The result was a leading current and capacitive reactive power. Then, when the reference changed, the capacitor voltage dropped. This made the amplitude of the 12 pulse voltage be smaller

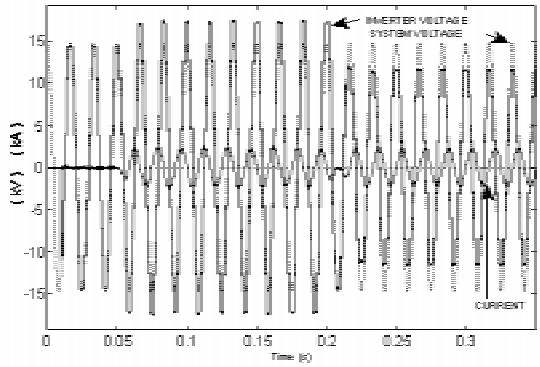

Fig. 8. STATCOM, balanced system.

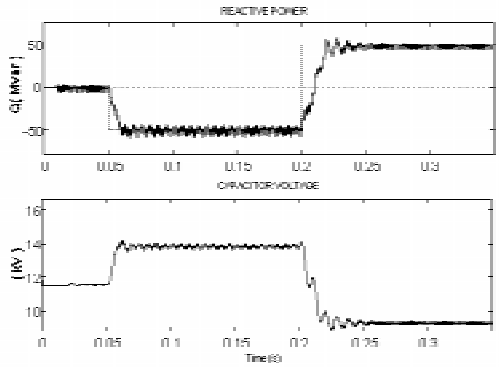

Fig. 9. STATCOM, results in a balanced system.

than the ac system voltage amplitude. The consequence was the lagging current and the inductive reactive power.

C. Results of the STATCOM – Unbalanced System

Figures 10 and 11 show the results in an unbalanced system due to the introduction of negative sequence components with 5% of the positive sequence amplitude.

These figures show the same variables described in Figures 8 and 9. These last results show that when the STATCOM is operated under an unbalanced ac voltage with negative sequence components (percentages higher than 1%) the STATCOM loses its capability to follow the reference and to generate reactive power.

Presently, the control technique to allow this STATCOM to operate in presence of negative sequence is under study. It has been used the instantaneous power theory to understand and to solve the STATCOM problems in presence negative sequence components.

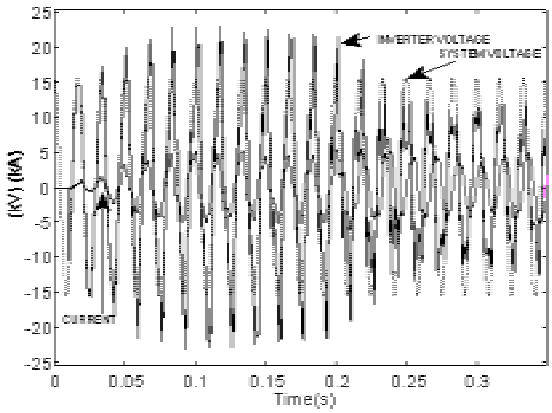

Fig. 10. STATCOM, unbalanced system (Negative Seq.).

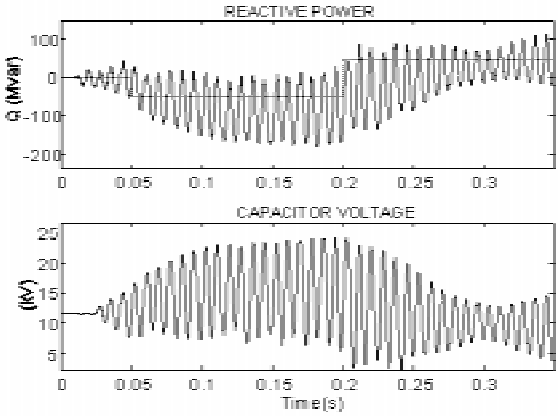

Fig. 11. STATCOM, unbalanced system (Negative Seq.).

The negative sequence component in the voltage produce a negative sequence current that makes the reactive power and the dc voltage oscillatory. According to the instantaneous power theory, current and voltage negative sequence components (V_-, I_-) produce an average real power $\overline{p}_-$, which may charge or discharge the dc capacitor. The dc capacitor voltage controller offsets this problem. On the other hand, the current negative sequence (I_-) with voltage positive sequence (V_+) and current positive sequence (I_+) with voltage negative sequence (V_-) produce oscillating real power, $\tilde{p}$. This power component is totally uncontrolled and is the cause of the oscillatory voltage and reactive power.

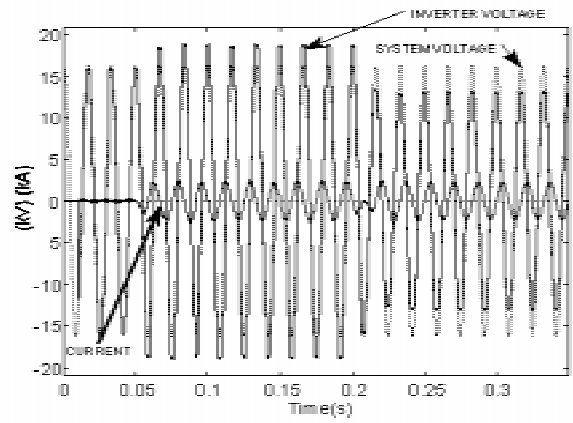

Fig. 12. STATCOM, unbalanced system (Zero Seq.).

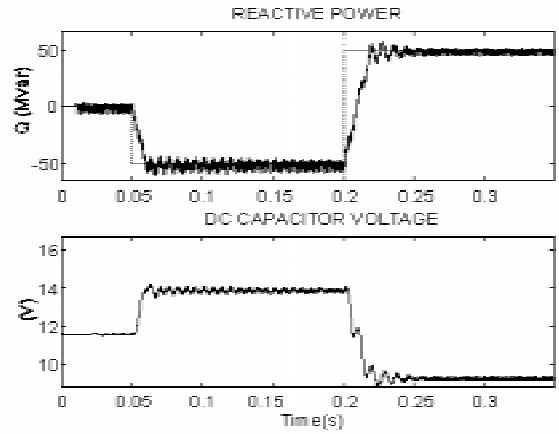

Fig. 13. STATCOM, unbalanced system (Zero Seq.).

The results in an unbalanced system due to the introduction of zero sequence components in the voltages fed to the compensator are shown in the Figures 12 and 13. They do not differ in any point from those obtained in balanced system conditions. This was expected since the topology used has only three wires. The zero sequence was tested to observe if it was able to interfere with control system.

IV. THE PWM STATCOM

The PWM STATCOM that will be analyzed in this paper assumes that the inverter switches at high frequency. There is one example of PWM STATCOM operating at line frequency [9] in each inverter. This STATCOM uses 3 single phase full bridge inverters to synthesize a three-phase inverter and uses in total 8 of these three-phase inverters with 7.5° phase shift between each of them to form a 48 pulse converter. Therefore the equivalent switching frequency is, in fact, 48 times the line frequency, which is high enough to avoid low frequency harmonics and no filter is necessary.

In the present paper, special attention will be given to the compensator based on one 6-pulse inverter only and with high switching frequency. For the conventional STATCOM, a 12-pulse inverter was considered. For the PWM STATCOM we chose to use a 6-pulse inverter because it can produce in theory, voltage with acceptable harmonic content if switched at high frequency. The basic structure of these two compensators does not differ much, however the control methods used are quite different.

The control of the PWM STATCOM is based in the pq theory [6, 7, 8] and in the adaptive current control method.

Figure 14 illustrates the PWM STATCOM control system. In this control, first, a positive sequence detector, equipment, also used in the STATCOM, senses the grid voltages and sends the voltage positive sequence frequency, phase and amplitude signals to the reactive control block.

The reactive control block uses the instantaneous power theory (pq theory). This block uses, as reference signals, a reactive power value that can be set arbitrarily. This is done this way because only the compensator is being studied in this work. In case of a real application, the reactive power reference would be provided by another control block. The measured voltages are transformed to v_α and v_β in the αβ0-frame (4). For this study, first, it was considered that there would be no zero sequence components. Considering that the reference of the desired reactive power, q_c, and the αβ voltages, the equations (5) and (6) can be used to calculate the current references signals, as given bellow:

$$i_{c\alpha} = \frac{1}{\Delta}.(v_\alpha.p_c + v_\beta.q_c)\,, \qquad (5)$$

$$i_{c\beta} = \frac{1}{\Delta}.(v_\beta.p_c - v_\alpha.q_c)\,, \qquad (6)$$

where, $$\Delta = v_\alpha^2 + v_\beta^2\,. \qquad (7)$$

Using the measured voltages and the reference of reactive power, the reactive control generates compensating current references. The current references, calculated in the αβ frame are transformed back to the abc coordinates and

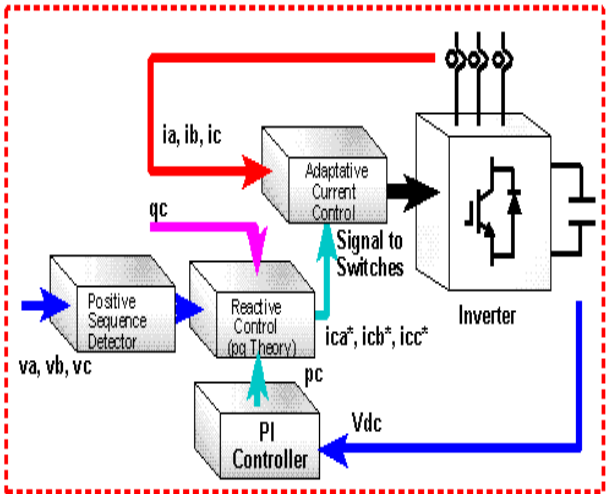

Fig. 14. PWM STATCOM Control System.

fed to the adaptive current control block. Then, the inverter synthesizes these currents, through the adaptive control.

Ideally, there would be no necessity of a reference signal for the active power, p_c. However, due to losses in the inverter this control of the active power flow is necessary to regulate the dc capacitor voltage at a fixed value.

It is important to note that in the STATCOM this voltage is variable and had to be controlled all the time. In the PWM STATCOM, this voltage is kept constant by controlling the amount of active power p_c flowing to or from the inverter.

Into the PWM STATCOM control system, this regulation is made through a PI (proportional-integral) controller. It senses the dc capacitor voltage and feeds the reactive power controller with an active power signal that regulates the voltage level reference.

A. Simulation of the PWM STATCOM

A model for the PWM STATCOM was developed using the described characteristics and simulated in the ATP program. The ac system to which this PWM STATCOM was connected is the same as in the previous case. The voltage of 18kV and the power of 400 MVA also were maintained in this simulation. All the tests with balanced and unbalanced conditions done using the STATCOM were repeated for the PWM STATCOM.

The switching frequency of the modeled PWM STATCOM was limited at 8kHz. This switching frequency is quite high and possibly not feasible in practice today at very high power. However, it may be used in lower power, for instance, at distribution or industrial systems where the power range is bellow MW range. The simulation was made considering a very high power just to be in the same range as for the STATCOM.

B. Results of the PWM STATCOM – Balanced System

Figures 15 and 16 show that the PWM STATCOM operating in a balanced system. Figure 15 shows the grid voltage and the compensating current. Figure 16 shows the results observed in the reactive power and dc capacitor.

These results demonstrates that the PWM STATCOM has a very good performance in balanced systems and has a very fast response to changes in the reactive reference commands. The response delay is less than 2ms. Both inductive and capacitive reactive powers are obtained

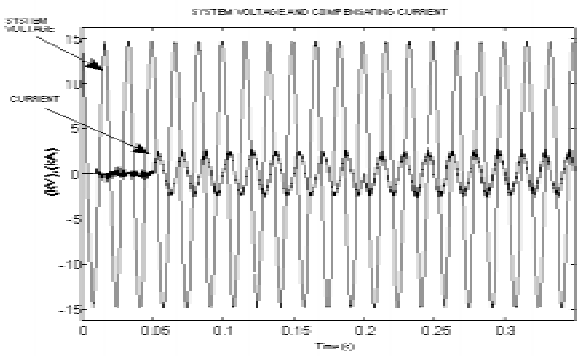

Fig. 15. PWM STATCOM, balanced System.

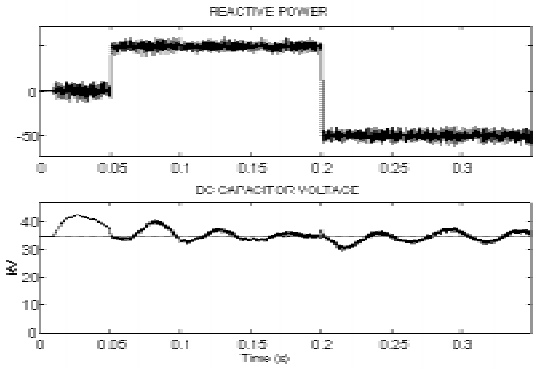

Fig. 16. PWM STATCOM, q, vdc, balanced System.

through the synthesized compensating currents.

C. Results of the PWM STATCOM – Unbalanced System

Figures 17 and 18 show the results for the PWM STATCOM when it was introduced in the voltages fed to the compensator, negative sequence components in the order of 10% of the positive sequence amplitude. Figures 17 and 18 repeat the same variables observed in Figures 15 and 16.

The principal differences comparing the results obtained in balanced and unbalanced systems are seen over the reactive power and dc capacitor voltages. There, the presence of oscillations in 120Hz is an effect of high rates of negative sequence components introduced in the system for this simulation. However, although there are 120Hz components over the reactive power and dc capacitor voltage, the results are far better than those obtained with lower rates of negative sequence introduced in the STATCOM simulation.

The difference in the behavior of the STATCOM and

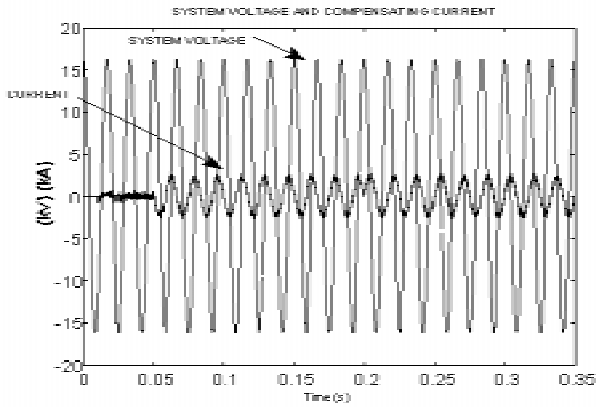

Fig. 17. PWM STATCOM , unbalanced (Negative Seq.).

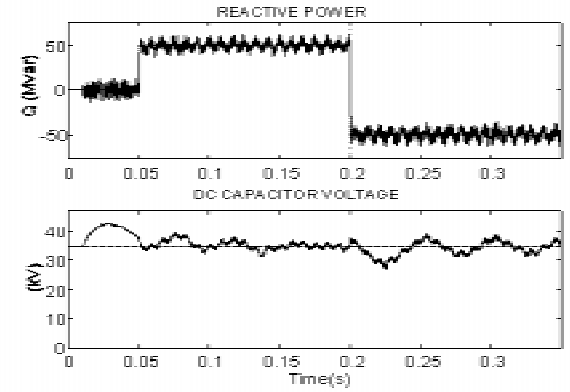

Fig. 18. PWM STATCOM, unbalanced (Negative Seq.)

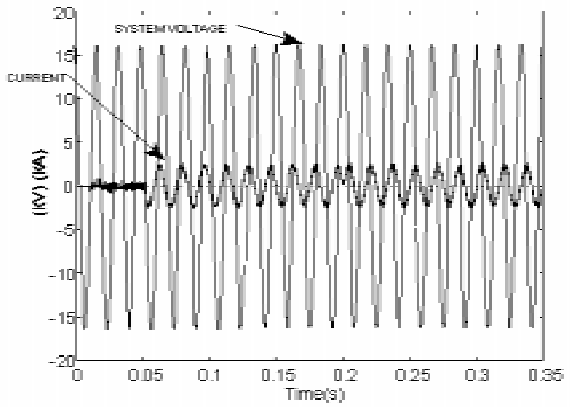

Fig. 19. PWM STATCOM, unbalanced system (Zero Seq.).

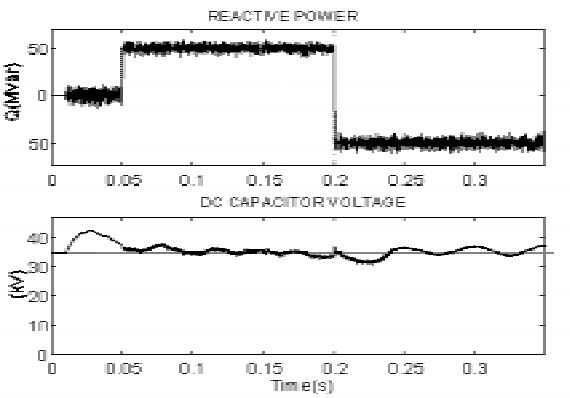

Fig. 20. PWM STATCOM, unbalanced (Zero Seq.).

the PWM STATCOM is quite understandable. The STATCOM, due to its principle of operation, is not able to control the flow of power due to the negative sequence components in the voltage. This explains the fact that at least one actual STATCOM [9] is shut down every time the voltage in the system presents unbalances greater than 5%. This is one drawback for this compensator, because generally, when unbalances are present is exactly when the compensator is more necessary. On the other hand, the PWM STATCOM, with the control based on the pq-theory, by principle, is able to ignore the negative sequence components in the voltage and calculate the correct current reference for the inverter. With this control the oscillating power due to the current negative sequence component (I_-) and the voltage positive sequence component (V_+) does not appear. The oscillating real power due to the current positive sequence component (I_+) and the voltage negative sequence component (V_-) still exists and produces oscillations in the dc capacitor voltage. For 10% unbalance the results is shown in Fig. 12, which is acceptable.

Figures 19 and 20 show tests done introducing zero sequence components in the voltage. These figures present the case were a zero sequence component unbalance with a value equal to 10% of the positive sequence amplitude was introduced. Again, the introduction of zero sequence components in the voltage does not change the results obtained during the balanced system. This fact was also expected for the PWM STATCOM because of the converter has three wires only.

V. Conclusions

Based in the simulations results, it is possible to conclude that the STATCOM has a good performance in balanced ac systems but, with the control studied (widely used), cannot work properly in presence o negative sequence components. The PWM STATCOM operates very well in balanced system. This compensator has also the capability to reject well the effects of the negative sequence component in the voltage. However the PWM compensator produces more switching losses.

In this way, the use of one or other compensator to control reactive power will be dependent on the system characteristics. The PWM STATCOM seems to be a good choice, with better dynamic performance, but probably with higher losses.

Both compensators can operate without problem in the presence of zero sequence components in the voltage.

VI. Acknowledgement

The authors gratefully acknowledge the contributions of Prof. Pedro G. Barbosa during the preparation and execution of the simulation cases developed for this work.

VII. References

[1] N. G. Hingorani, "Power Electronics in Electric Utilities: Role of Power Electronics in Future Power Systems," *Proceedings of the IEEE*, Vol. 76, Nº. 4, April, 1988.

[2] L. Gyugyi, "Solid-State Synchronous Voltage Sources for Dynamic Compensation and Real-Time Control of AC Transmission Lines," Emerging Practices in Technology, IEEE - Transmission Lines, IEEE Standards Press, Piscataway, USA, 1993.

[3] E. H. Watanabe, R.M. Stephan, C. M. J. Portela e M. Aredes, "Relatório COPPETEC: Pesquisa para Avaliação Preliminar da Tecnologia FACTS Aplicada na Exploração de Energia Elétrica na Região Amazônica", COPPE/UFRJ COPPETEC, Maio, 1992.

[4] E. H. Watanabe and P. G. Barbosa, "Principles of Operation of FACTS Devices," Revista Eletro-Evolução: Sistema de Potência, Nº. 6, pp. 73-82, 1996.

[5] O. I. Elgerd, *Energy Systems Theory*, McGraw-Hill, 1978

[6] H. Akagi, Y. Kanagawa and A. Nabae, "Instantaneous Reactive Power Compensator Comprising Switching Devices Without Energy Storage Components", *IEEE Trans. Industry Applications*, vol. IA-20, May-Jun. 1984.

[7] E. H. Watanabe, R. M. Stephan and M. Aredes, "New Concepts of Instantaneous Active and Reactive Powers in Electrical Systems with Generic Loads," *IEEE Trans. Power Delivery*, vol. 8, No. 2, pp. 697-703, April 1993.

[8] M. Aredes and E. H. Watanabe, "New Control Algorithms for Series and Shunt Three-Phase Four-Wire Active Power Filters," *IEEE Trans. Power Delivery*, vol. 10, No. 3, pp. 1649-1656, July 1995.

[9] S. Mori, K. Matsuno, T. Hasegawa, S. Ohnishi, M. Takeda, M. Seto, S. Murakami, F. Ishiguro, "Development of a Large Static Var Generator Using Self-Commutated Inverters for Improving Power Systems Utility " *IEEE Trans. Power Delivery*, vol. 8, No. 1, Feb. 1993, pp. 371- 377.