Comparative Analysis of Three High Power Factor Single Phase 200 W Rectifiers

Alexandre Ferrari de Souza and Ivo Barbi
Federal University of Santa Catarina – Electrical Engineering Department
INEP – Power Electronics Institute – P.O. Box 5119 – Florianópolis – SC – Brazil - 88.040-970
Phone: 55.48.331.9204 – Fax: 55.48.234.5422 – e-mail: alex@inep.ufsc.br
Internet: http://www.inep.ufsc.br

***Abstract* – This paper presents a comparison among three different topologies (SEPIC, Flyback and ZETA) applied as preregulators with high power factor. Unlike the boost converter, in which the output voltage is always larger than the input voltage, the three proposed rectifiers can operate with an output voltage higher or smaller than the sinusoidal input voltage, with reduced harmonic content of the input current. The three presented rectifiers employ the average current mode control in the input current to obtain a high power factor. The three prototypes of 200W were designed and tested at laboratory.**

I. Introduction

The great development of static converter technology and semiconductor components made it possible the use of the power electronics in AC-DC conversion for several industry applications. The use of rectifiers with large filter capacitors in the output draws a non-sinusoidal current waveform from the AC mains with large harmonic content, resulting in a very low power factor. To this distorted current, that represents electric power grid pollution, electromagnetic interference, losses in the transmission and distribution lines and voltage distortion are associated. The use of high power factor rectifiers has become an important requirement for power supplies, especially when international harmonics standards, like the IEC-61000-3-2 must be satisfied [1].

The front end rectifier followed by the boost converter operating in continuous current mode with average input current control is the most used high power factor rectifier [2]. The drained current from the AC mains is sinusoidal, with a very low harmonic content. However, the output voltage of this converter must be higher than the AC input voltage. This feature limits the use of this preregulator in situations where it is desirable to obtain an output voltage smaller than the AC input voltage.

In order to obtain an output voltage smaller than the input voltage, several papers have presented solutions based on the SEPIC, ZETA and other converters [3], [4], [5], using average input current control and other control techniques. This paper proposes to compare three step-up step-down high power factor rectifiers, based on the SEPIC, ZETA and Flyback converters. The comparison will take account the efficiency, power factor, simplicity, device rating and conducted noise. The presented rectifiers also present high efficiency and low cost, allowing their use in industrial applications.

II. Analysis of the Topologies

The power stage of the three converters is presented in Fig. 1. In Fig. 1.a, the SEPIC converter is presented. It is composed of two inductors (L_1 and L_2), a switch (S), two capacitors (C_1 and C_2) and a diode (D). It is an inductive and capacitive accumulation converter, and its principle of operation is described in [3]. The SEPIC converter presents a current source characteristics, which is suitable for high power factor applications with low current harmonic content.

The ZETA converter, shown in Fig. 1.b, is composed of the same number of components of SEPIC converter, presenting, however, the switch in series with the input current flow path. This characteristic will lead to the use of an input filter to attenuate the high order current harmonics.

The Flyback converter (Fig. 1.c) is composed of a transformer (T_1), a switch (S) a diode (D) and a Capacitor (C_2), presenting, therefore, less components than the previous ones. The Flyback converter, however, also presents a switch in series with the input current flow path.

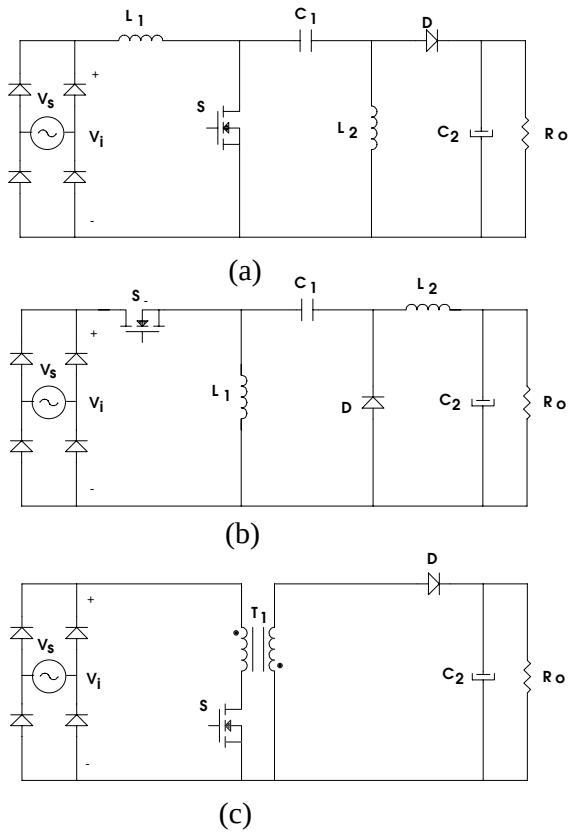

Fig. 1 – (a) SEPIC, (b) ZETA and (c) Flyback Rectifiers

The output static characteristics for the SEPIC, ZETA and Flyback converters operating in continuous current mode are represented by equations (1), (2) and (3), respectively. Where **D** is the duty cycle, $\mathbf{V_o}$ is the output voltage, $\mathbf{V_i}$ is the input voltage and **n** is the transformer turns ratio of the Flyback converter. The employed turns ratio for the Flyback's transformer is unity, therefore the output static characteristics for the three converters are the same.

$$\frac{V_o}{V_i} \equiv \frac{D}{1-D} \tag{1}$$

$$\frac{V_o}{V_i} \equiv \frac{D}{1-D} \tag{2}$$

$$\frac{V_o}{V_i} \equiv \frac{n \cdot D}{1-D} \tag{3}$$

Fig. 2 presents the three rectifiers with the inclusion of the input LC filter. This filter must be designed in order to reduce input current harmonics. It can be noticed that this filter is not necessary in the SEPIC converter, once the converter presents a behavior of current source in the input.

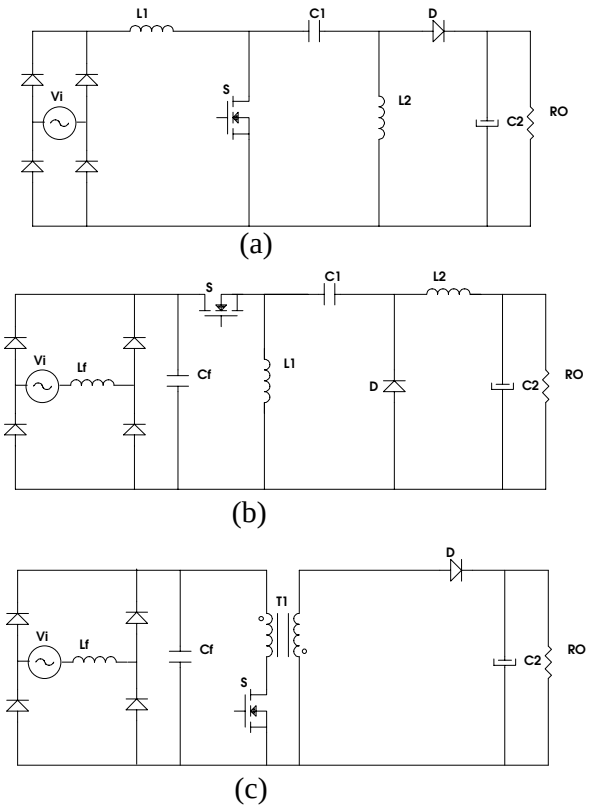

Fig. 2 – (a) SEPIC, (b) ZETA and (c) Flyback rectifiers with input filters.

III. Average Input Current Mode Control

In order to implement the average input current mode control for the three converters, an integrated circuit of Unitrode, UC3854 [6] was used. The operation of this circuit is based on the comparison of a sinusoidal current reference (I_{ref}) with the input current (I_i). An appropriated two zero, one pole regulator is used in the current regulator.

The current reference results of a multiplier-divider with the following inputs (Fig.3):

- Waveform Input (input A): it defines the shape and the frequency of the reference current;
- Voltage regulator error (input B): it adjusts the amplitude of the reference current according to load variation;
- Voltage feed-forward (input C): it adjusts the amplitude of the reference current according to input voltage variations.

The input current is sampled through a sensor and compared with the current reference. The output of the current regulator will be proportional to the necessary instantaneous duty cycle to keep the input current sinusoidal and in phase with the AC mains voltage.

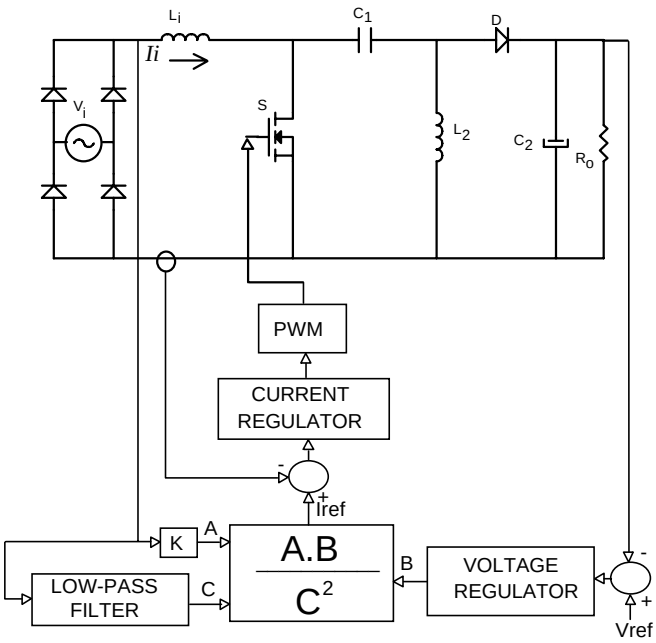

Fig. 3 – Control strategy applied to the SEPIC converter.

IV. Experimental Results

Three prototypes were implemented in laboratory, with the following specifications:

- V_S = 110 V_{rms} (Input Voltage)
- P_O = 200 W (Output Power)
- $V_{O\ min}$ = 100 V (Minimum Output Voltage)
- $V_{O\ max}$ = 200 V (Maximum Output Voltage)

It can be noticed that the ouput voltage of the implemented prototypes can be varied from 100 V up to 200 V. The switching frequency is 25kHz, and the used power switches were MOSFET's.

Fig.4 shows the electrical diagram of the implemented SEPIC converter. It can be observed that for the SEPIC converter it was not necessary the use of in-rush protection circuit.

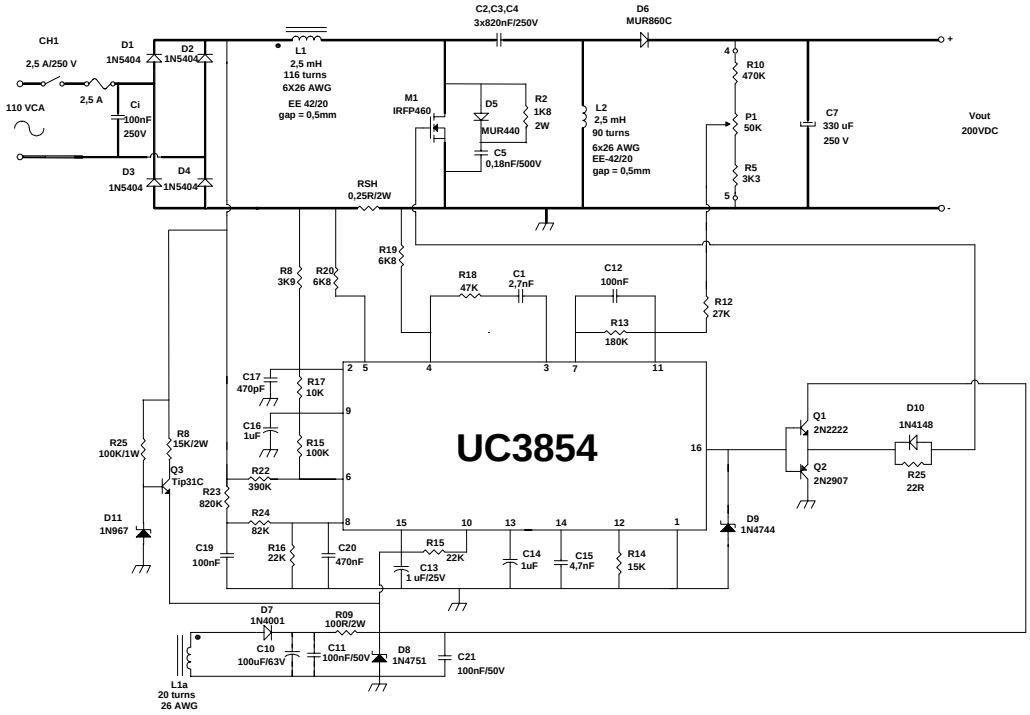

Fig. 4 – Electrical diagram of the high power factor SEPIC rectifier.

The electrical diagram of the ZETA converter is presented in Fig.5. As well as for the SEPIC converter SEPIC, it was not necessary to use the in-rush protection circuit. For both ZETA and SEPIC converters, snubber circuits were used in the MOSFET's.

The electrical diagram of the Flyback converter is presented in Fig. 6. In this converter it was used a clamping circuit for the MOSFET.

It can be noticed that the auxiliary power supplies were obtained from auxiliary windings of inductors in SEPIC and ZETA converters and of the transformer in the Flyback converter. In order to supply the necessary energy for the operation of the integrated circuit UC3854 and to the gate drives during start-up, an auxiliary circuit formed by two resistors, a zener and a transistor were used, which are inhibited after this start-up.

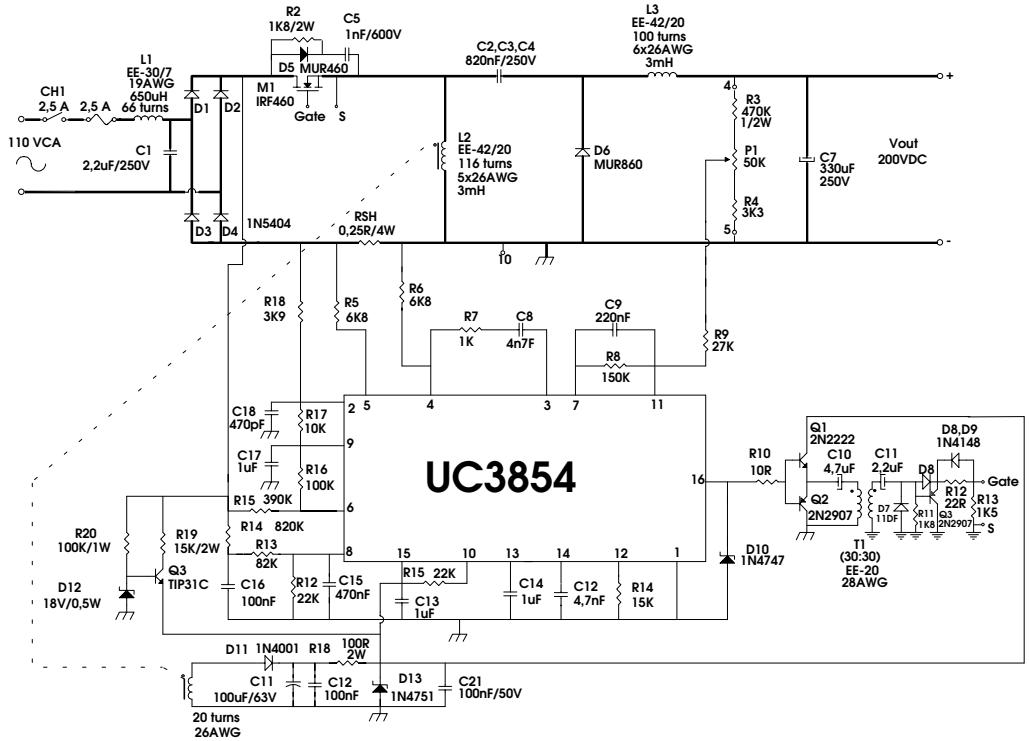

Fig. 5 – Electrical diagram of the high power factor ZETA converter.

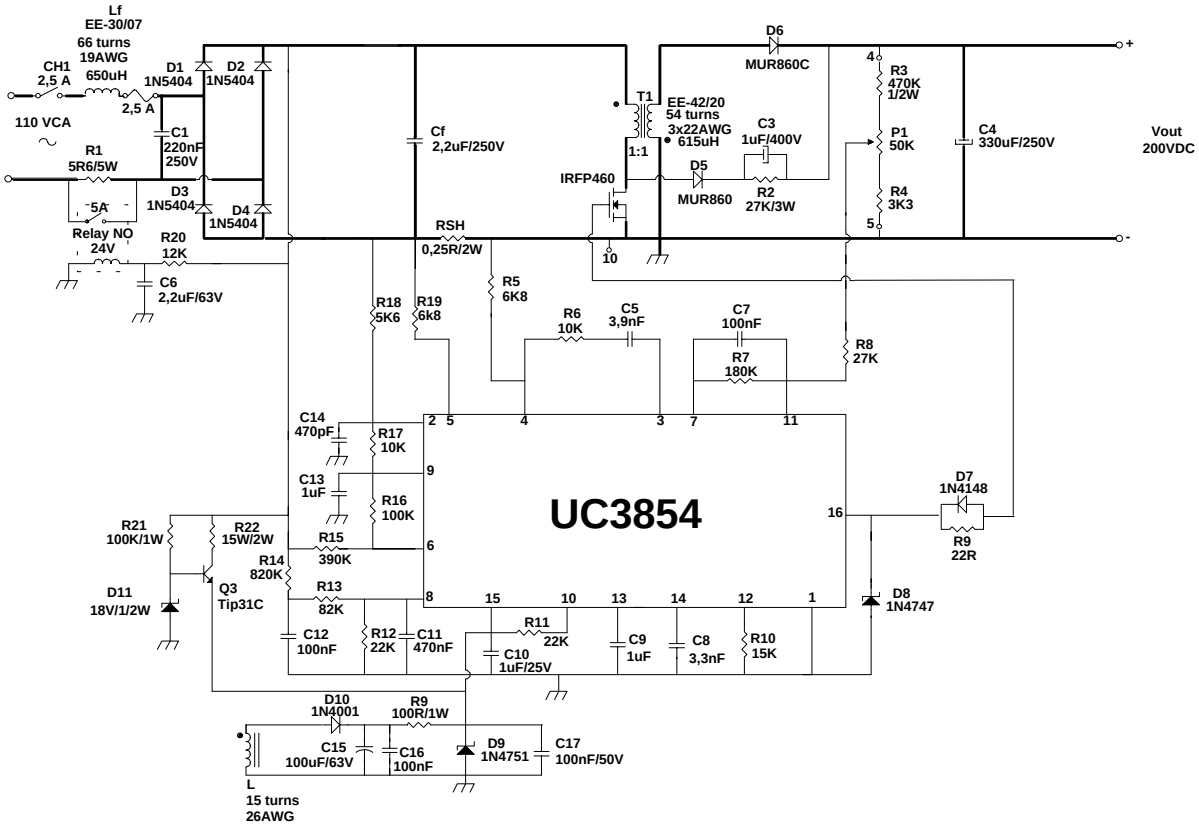

Fig. 6 – Electrical diagram of the Flyback converter.

The input voltage and input current waveforms for the SEPIC preregulator are shown in Fig. 7. The input current is almost sinusoidal, with low current harmonics. The high frequency components can be eliminated through the use of a small filter capacitor in the input.

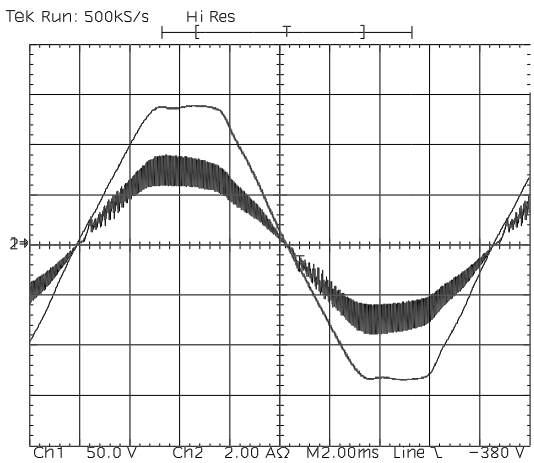

Fig. 7 – Input voltage (50V/div) and input current (2A/div.) of the SEPIC converter.

The input voltage and current waveforms for the ZETA and Flyback converters are presented in Fig. 8 and Fig. 9, respectively.

It can be observed that all the converter presented high power factor and low current harmonic distortion.

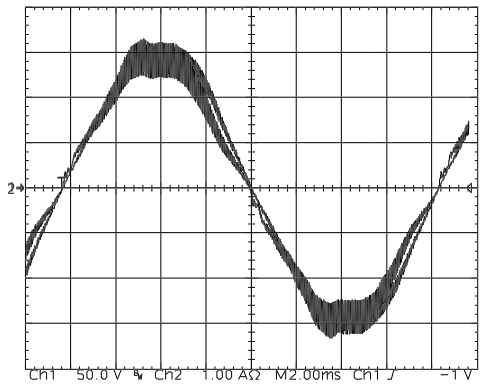

Fig. 8 – Input voltage (50V/div) and input current (2A/div.) of ZETA converter.

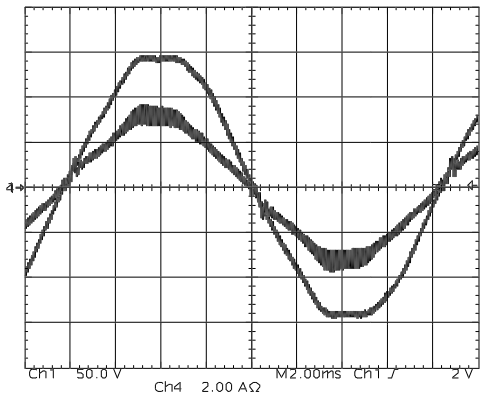

Fig.9 – Input voltage (50V/div) and input current (2A/div.) of Flyback converter.

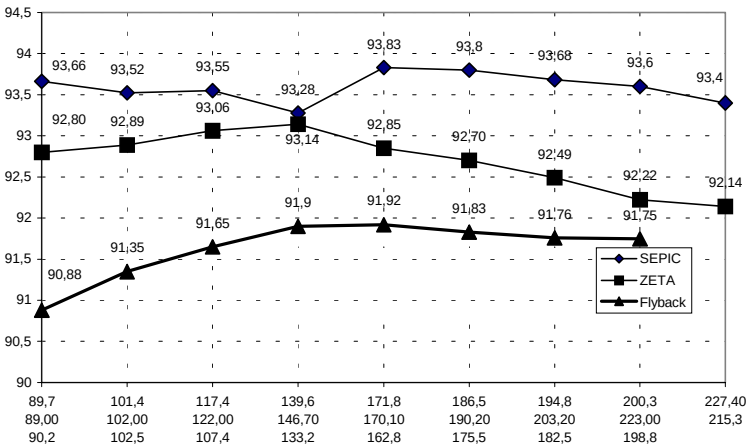

Fig. 10 – Efficiency comparison of the three converters.

Table I – Comparison of the three converters: SEPIC, ZETA and Flyback.

	Po(w)	TDH V (%)	TDH I (%)	FP	η%
SEPIC	**200**	**3,76**	**3,80**	**0,994**	**93,6**
ZETA	**200**	**3,85**	**5,00**	**0,986**	**92,49**
Flyback	**200**	**3,81**	**6,30**	**0,980**	**91,75**

VI. Comparative Analysis

Fig. 10 presents the efficiency as function of the processed power for the three preregulators. The converter that presented better efficiency in the whole load range was the SEPIC converter.

Table I presents the comparison of the input voltage and input current Total Harmonic Distortion (THD), Power Factor (PF) and efficiency for the three rectifiers.

It can be noticed that the results for the three converters are excellent. However, the SEPIC converter presented the best results in efficiency, THD and power factor.

It was also performed an EMI test (conducted noise) in the three converters. The converters input currents were tested according to CISPR 22 standard. Fig. 11 shows the limits in dBμV for this standard.

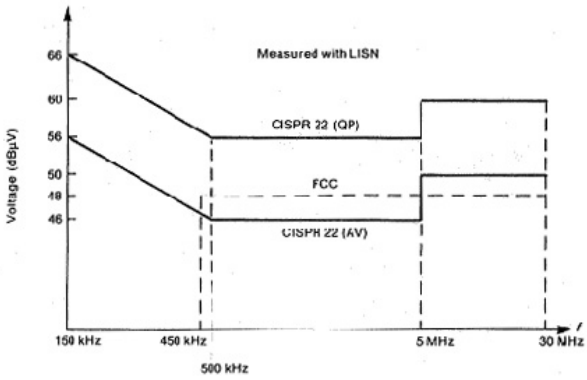

Fig. 11 – Limits for CISPR22 standard.

The conducted noise test for the SEPIC converter is shown in Fig. 12. It can be noticed that this converter complies with the CISPR22 standard without the addition of any EMI filter.

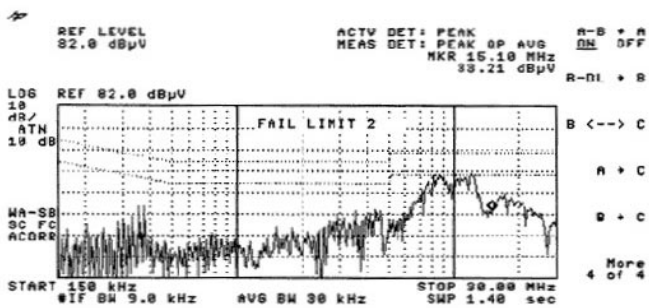

Fig. 12 – EMI conducted noise for the SEPIC converter.

The conducted noise test for the ZETA converter is shown in Fig. 13. It will be necessary an EMI filter in this converter in order to reduce the conducted noise around the frequency of 10 MHz.

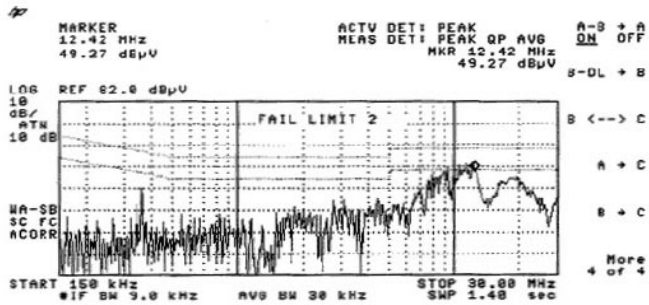

Fig. 13 – EMI conducted noise for the ZETA converter.

The conducted noise test for the Flyback converter is shown in Fig. 14. It can be noticed that this converter complies with the CISPR22 standard without the addition of any EMI filter.

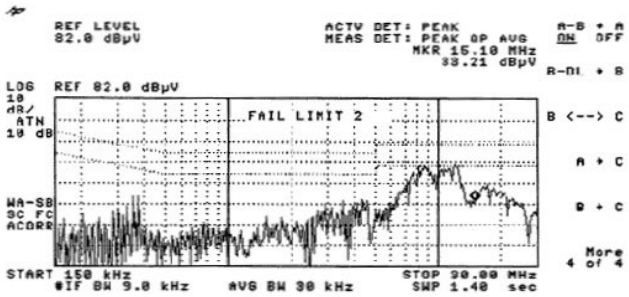

Fig. 14 – EMI conducted noise for the Flyback converter.

According to the experimental results and the EMI tests performed in the three converters, it can be verified that the SEPIC converter presented the best results in step-up step-down applications. The number of magnetic components is the same in all the converters, once the Flyback and ZETA converters need input filters for the current harmonics.

The volume of the three converters for the rated power is practically the same. In Fig. 15 it is shown the implemented SEPIC converter. Efforts can be made in order to reduce the size of the magnetics.

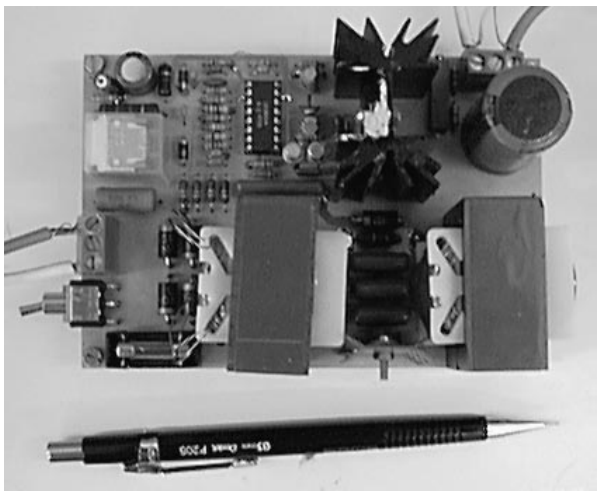

Fig. 15 – Photography of the implemented SEPIC converter.

VII. Conclusion

In this paper the excellent operation of the SEPIC, ZETA and Flyback converters operating in continuous conduction mode as power factor preregulators were verified. It was verified that the SEPIC converter presented the best results in efficiency, THD, power factor and conducted noise.

In order obtain better performances, EMI filters must be designed.

These converters constitute an excellent alternative in high power factor applications where the output voltage must be larger or smaller than the input voltage.

VIII - References

[1] International Electrotechnical Comission, Electromagnetic Compatibility, IEC 61000-3-2 – Ed. 1.2, Switzerland, 1998.

[2] L. Dixon, “High Power Factor Preregulators for off-line Power Supplies”, Unitrode Power Supply Design Seminar, Topic 6, 1988, pp. 6.1-6.16.

[3] C. A. Canesin, and I. Barbi, “A Unity Power Factor Multiple Isolated Outputs Switching Mode Power Supply Using a Single Switch”, *IEEE APEC Records*, 1991, pp. 430-436.

[4] M. J. Kocher and R. Steigerwald, “An AC to DC Converter with High Quality Input Waveforms”, *IEEE PESC Records*, 1982, pp. 63-75.

[5] Campos, F. S., “*Estudo do Conversor Zeta Operando em Condução Contínua Aplicado à Correção do Fator de Potência Utilizando o Método de Controle de Corrente por Valores Médios Instantâneos*”, Master Degree Dissertation, Florianópolis, 1995.

[6] Unitrode Corporation, “UC3854 Controlled Power Factor Correction Circuit Design”, Application Note U-134, USA, 1996, pp. 303-322.