Balanced Operation of Three-Phase Cage Induction Generator Directly Connected to Single-Phase Utility Grid

Ricardo Quadros Machado(1), Enes Gonçalves Marra(2) and José Antenor Pomilio(1)

(1) School of Electrical and Computer Engineering
State University of Campinas - UNICAMP
C. P. 6101 - CEP: 13081-970 - Campinas-SP - Brazil
e-mail: {ricardom, antenor}@dsce.fee.unicamp.br

(2) School of Electrical Engineering
Federal University of Goiás - UFG
Goiânia-GO Brazil
e-mail: enes@dsce.fee.unicamp.br

***Abstract* – This paper presents a new solution for the direct connection of a three-phase induction generator to a single phase grid. This low cost, high power quality system is intended to be used in micro-hydro plants, without control of the turbine. The generated power that is not consumed by the local load is send to the single-phase grid. The power flux control is provided by a three-phase PWM inverter, working as a shunt active filter. This converter allows balancing the induction generator currents and voltages, while frequency and voltage stability is provided by the connection to the grid. The inverter control strategy is based in a modification of the instantaneous power theory.**

I. Introduction

The attempt to use the Induction Generator (IG) as a cost-advantageous alternative has been the goal of several investigations, which has been carried out since long ago [1-6]. The many well known advantages of the three-phase cage rotor induction machine has encouraged significant efforts in seeking suitable approaches which are able to overcome the IG poor voltage regulation characteristics as well as synchronous frequency variation. Some advantages of the induction machines are its robustness, simple construction, little maintenance requirements, wide availability, low cost, and higher power-weight ratio ($W \cdot kg^{-1}$) than other kind of electrical machines.

In residential areas, light commercial, light manufacturing, and rural areas, the electric power available usually are single-phase. Customers in these areas may request three-phase from the utility and find that it is uneconomical for the utility to meet a relatively small three-phase need [7]. On the other side, there might be energy sources available in some of these areas to produce electric power. Considering this scenario, some authors have proposed the direct connection of the induction generator to the single-phase utility grid, as a mechanism to obtain three-phase balanced voltages [8-11]. This connection is the so-called 'Steinmetz' connection which has been used for three-phase motors [8]. However, these proposed alternatives are able to operate only under strict circumstances and are unfavorably affected by the AC load impedance variations.

The purpose of this work is to present a simple and feasible methodology to balance the IG voltages and currents, when the generator is connected to the single-phase grid. This methodology relies on the instantaneous power theory, as proposed by Akagi et al. [12], to assess the suitable line currents which will lead to balanced voltages and currents at the IG terminals.

This research is supported by FAPESP (proc. 98/11170-2) and CAPES.

II. Methodology

The direct connection of an IG to the single-phase utility grid, as shown in Fig. 1, causes strongly unbalanced line voltages and currents at the generator terminals. Fig. 2 presents the IG voltages and the currents at the stator obtained through simulation of the system described in Fig. 1.

The analysis carried out in this work are based on simulation results. The three stationary-axis model (αβγ model) of the induction machine was employed in the simulations [13]. The induction machine parameters used are presented in Table I. The single-phase rms grid voltage was 220 V and the synchronous frequency 60 Hz.

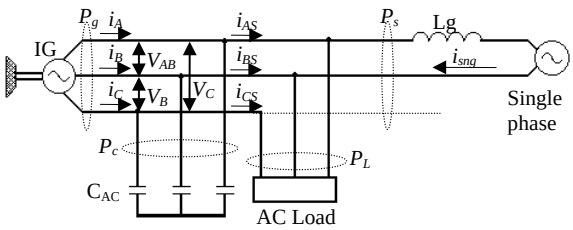

Fig. 1. IG directly connected to the single-phase utility grid.

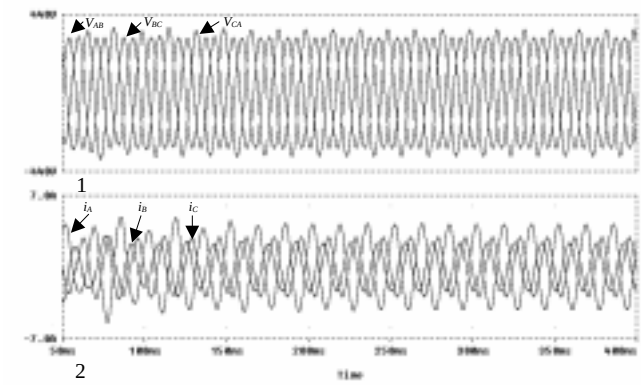

Fig. 2. IG line voltages (1) and currents (2) at the uncompensated system.

III. The Proposed System

The system proposed comprises an induction generator directly connected to the single-phase grid and an AC capacitor bank, which provides the IG magnetization

current, similarly to the system described in Fig. 1. Additionally, a Static Power Converter (SPC) shunt connected with the grid will be controlled in order to balance the IG currents and, as a consequence, its terminal voltages. A single and a three-phase inverter are be studied as possible SPC topologies.

Let us initially consider that no load is connect to the IG. In this case, all the generated power must be send to the single-phase line (neglecting the system losses). Otherwise the power would be absorbed by the SPC, and should be consumed anyway. Remember that the generated power is not controlled and depends on the IG rotor speed, that will determine the slip, once the stator frequency is kept constant by the grid.

TABLE I
Induction Machine Parameters Referred to the Stator (60 Hz)

Stator resistance (r_S)	4.4 Ω
Rotor resistance (r_r)	5.02 Ω
Leakage stator reactance (X_S), (2p.60.L_{ls})	5.9 Ω
Leakage rotor reactance (X_r), (2p.60.L_{lr})	5.9 Ω
Linkage reactance (X_m), (2p.60.M)	70.53 Ω
Iron and mechanical losses resistance (R_m)	582 Ω
Rated power	½ hp
Number of poles (P)	4
Rotor inertia (J)	0.0006 kg·m^2

A. Single-phase converter

In this case the single-phase grid is connected to phases 'A' and 'B'. The current imposed by the SPC at phase 'C' is called the compensation current (i_{CCP}). This current is assessed by sampling the phase-voltages at the IG terminals (V_A, V_B and V_C) and the line-currents of two different phases ('A' and 'C'), as presented in Fig. 3. In case of load connection, it should be connected the point in which the currents measurement are done. In this case the SPC could compensate unbalanced loads.

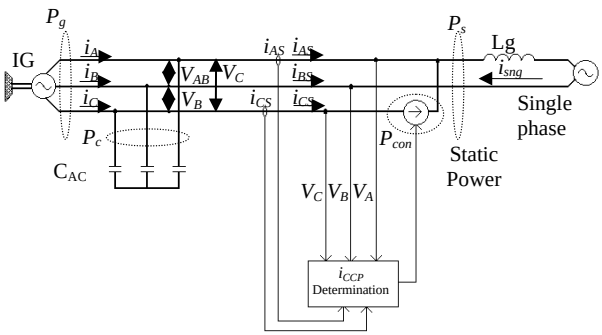

Fig. 3. General structure of the single-phase converter.

Assuming that the line-currents at phase 'A' and 'C' (i_{AS} and i_{cs}, respectively) are known by sampling, the line-current at phase 'B' is determined as in (1).

$$i_{BS} = -(i_{AS} + i_{CS}) \tag{1}$$

The instantaneous power provided by the induction generator to the single-phase utility grid is assessed according to the three-wire Instantaneous Power Theory (IPT), presented by Akagi et al. [12]. Once the instantaneous power provided to the grid is known, it is possible to assess the line-current which there would be at phase 'C' if the system were balanced. Such a line-current at phase 'C' is the compensation current imposed by the SPC (i_{CCP}).

The SPC function in this system is just balancing the IG line currents, but is not concerned with any kind of reactive power or waveform distortion compensations. A significantly favorable feature that comes out from this approach is that it is not necessary to separate the oscillating and the average values of the instantaneous active and reactive power, which avoids delays and the characteristic drawbacks of filter tuning.

As the system is three-wire three-phase, there are not neutral or zero-sequence voltage or current components. The voltages and currents can be transformed to the αβ domain as in (2) and (3), respectively.

$$\begin{bmatrix} V_\alpha \\ V_\beta \end{bmatrix} = \sqrt{\frac{2}{3}} \cdot \begin{bmatrix} 1 & -\frac{1}{2} & -\frac{1}{2} \\ 0 & \frac{\sqrt{3}}{2} & -\frac{\sqrt{3}}{2} \end{bmatrix} \cdot \begin{bmatrix} V_{AS} \\ V_{BS} \\ V_{CS} \end{bmatrix} \tag{2}$$

$$\begin{bmatrix} i_\alpha \\ i_\beta \end{bmatrix} = \sqrt{\frac{2}{3}} \cdot \begin{bmatrix} 1 & -\frac{1}{2} & -\frac{1}{2} \\ 0 & \frac{\sqrt{3}}{2} & -\frac{\sqrt{3}}{2} \end{bmatrix} \cdot \begin{bmatrix} i_{AS} \\ i_{BS} \\ i_{CS} \end{bmatrix} \tag{3}$$

The instantaneous real (p) and imaginary power (q) are derived by substituting (2) and (3) in (4).

$$\begin{bmatrix} p \\ q \end{bmatrix} = \begin{bmatrix} V_\alpha & V_\beta \\ -V_\beta & V_\alpha \end{bmatrix} \cdot \begin{bmatrix} i_\alpha \\ i_\beta \end{bmatrix} \tag{4}$$

The compensation currents are determined using balanced three-phase voltages (V'_A, V'_B, V'_C), as if the generator already produced these voltages. The balanced three-phase voltages at the αβ domain (V'_α, V'_β) are determined as in (2).

The compensation currents at the αβ domain are assessed as in (5).

$$\begin{bmatrix} i_{\alpha CP} \\ i_{\beta CP} \end{bmatrix} = \frac{1}{\left(V'^{\,2}_\alpha + V'^{\,2}_\beta \right)} \cdot \begin{bmatrix} V'_\alpha & -V'_\beta \\ V'_\beta & V'_\alpha \end{bmatrix} \cdot \begin{bmatrix} p \\ q \end{bmatrix} \tag{5}$$

The compensation current to be imposed in phase 'C' by the SPC (i_{CCP}) is given by (6).

$$i_{CCP} = -\sqrt{\frac{2}{3}} \cdot \left(\frac{1}{2} \cdot i_{\alpha CP} + \frac{\sqrt{3}}{2} \cdot i_{\beta CP} \right) \tag{6}$$

The action of the SPC in imposing the desired balanced line-current at phase 'C' will drive the system to balanced operation conditions, during steady-state operation.

The fluxogram that describes this procedure is shown at the end of the paper, in Fig. 17.

Fig. 4 exhibits the IG terminal voltages and currents, obtained from the simulation of the system including the SPC. Notice how the compensation was effective in balancing the generator terminal voltages and line-currents.

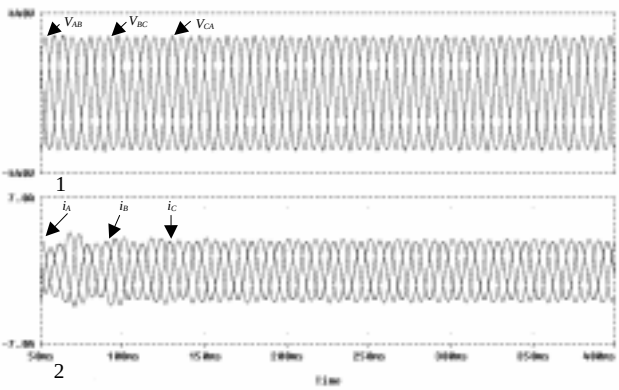

Fig. 4. IG line voltages (1) and currents (2) with single-phase SPC.

Nevertheless, taking into account the average power absorbed by the SPC, $\overline{p}_{con}$, its value is not zero, what means that part of the generated power flows to the converter. Fig. 5 shows the current injected in the grid, the instantaneous power and the respective average values.

This structure would be useful only if the power absorbed by the SPC could be dissipated [5] or delivered to the line through another converter [6].

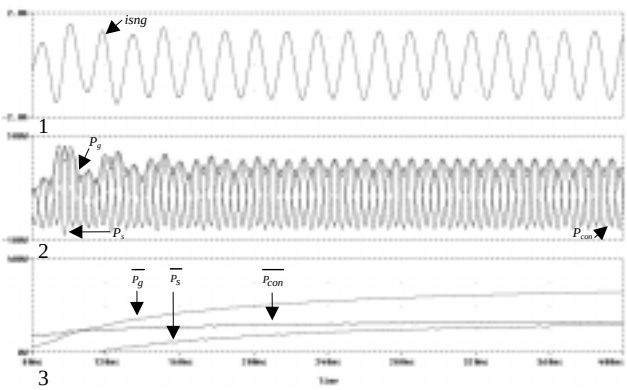

Fig. 5. Single-phase line currents (1), instantaneous power (2), and average power (3) at the single-phase compensated system.

B. Three-phase converter

In this case additional current measurements are necessary to allow the correct operation of the SPC. The current i_{CCP} continues being the one that must appear at phase 'C'. But the current at the SPC respective output, i_{Ccon}, will be given by (7). Where i_{CL} is the load current at that phase.

$$i_{con} = i_{CCP} - i_{CL} \tag{7}$$

The instantaneous power absorbed by the SPC, is given by:

$$P_{con} = (V_A - V_B) i_{Acon} - (V_B - V_C) i_{Ccon} \tag{8}$$

In steady-state this power must be zero. Otherwise the SPC would store energy, what is not possible.

The current at the 'B' branch is determined in order to cancel this power. The control circuit is shown in Fig. 6. A low-pass filter retains only the average value of the instantaneous power, that corresponds to the active power. A PI compensator produces an output that, multiplied by a sinusoidal signal (proportional to V_{AB}) defines the current to be injected by the SPC through its 'B' terminal i_{Bcon}.

The current i_{Acon} is defined according to (9).

$$i_{Acon} = -(i_{Bcon} + i_{Ccon}) \tag{9}$$

The whole system, including the three-phase SPC is shown in Fig. 7.

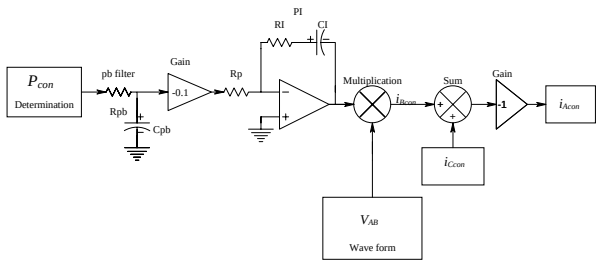

Fig. 6. Block diagram of the currents to converter.

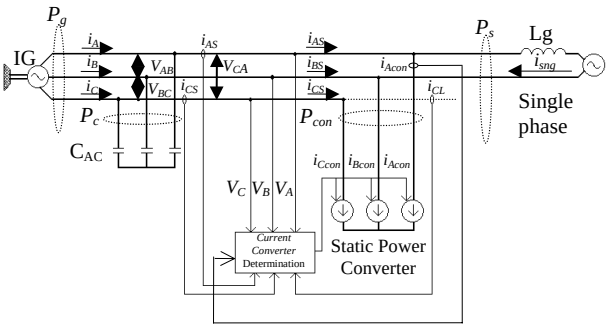

Fig. 7. General structure of the three-phase converter without load.

C. Static Power Converter Implementation

The implementation of the SPC is achieved by means of a three-phase voltage-fed inverter. The converter allows bi-directional energy flow from the DC side to the AC side. The general configuration of the system comprising the inverter is presented in Fig. 8.

The converter output currents are accomplished using hysteresis control of the currents at the output filter inductances, L_f, using i_{Acon}, i_{Bcon}, *and* i_{Ccon} as the reference values.

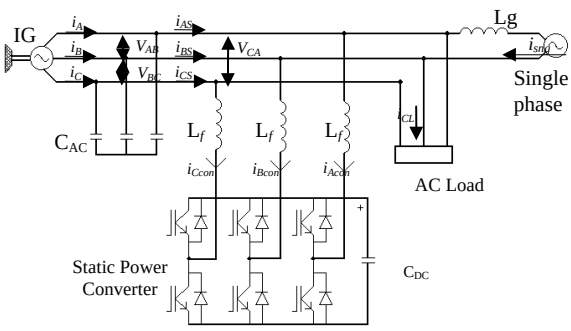

Fig. 8 General configuration of the proposed system comprising the Static Power-Compensator with load.

IV. Simulation Results

The whole system (except for the inverter) was simulated to verify the effectiveness of the control strategy. Three cases were studied, analyzing the system ability to balance the IG operation and to control the power flux to the single-phase grid.

A. IG, SPC, and single-phase grid

Fig. 9 displays the results of the case shown in Fig. 7, what means, without any load connected to the IG terminals. It is clear the action of the SPC balancing the IG output currents and consequently its voltages. Fig 10 shows the sinusoidal current injected in the single-phase grid. Can be noticed in the same figure that the generated power flows almost totally to the grid. The small difference is due the small resistances included in series with the excitation capacitors. The SPC average power goes to zero in steady-state.

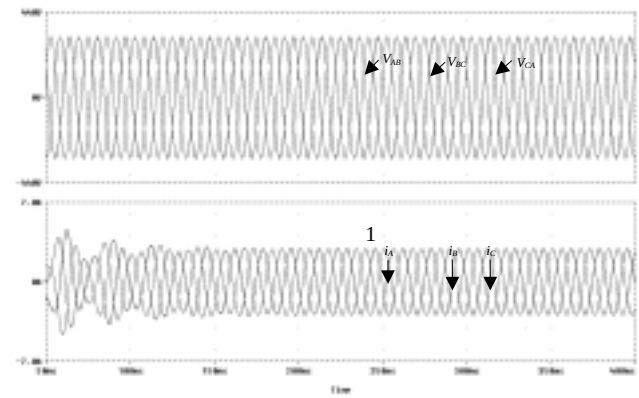

Fig. 9. IG line voltages (1) and currents (2) at the three-phase compensated system without load.

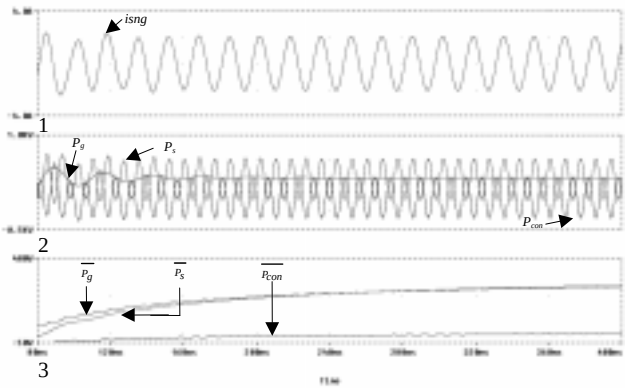

Fig. 10. Single-phase line currents (1), instantaneous power (2), and average power (3) at the three-phase compensated system without load.

The small distortion observed in the grid current is due to the control circuit (Fig. 6) response. If the PI block output presents any AC component, the phase 'B' reference will not be exactly sinusoidal, distorting also the other currents. Decreasing the low-pass filter cut-off frequency or increasing the integral time solves this problem, but produces a slower dynamic response.

B. IG, SPC, balanced AC load, and single-phase grid

A three-phase balanced load is connected at the IG terminals, as shown in Fig. 11. Fig. 12 shows the system ability to maintain the balanced operation even after the connection of the load. In this case it is expected that the total amount of power to be sent to the single-phase grid be the difference between the generated power and the load consumption. Fig. 13 shows the reduction of the single-phase grid current when the load is connected. The instantaneous and average power calculated at different points of the system confirms the expectation that the control strategy while zeroes the SPC average power balance the IG currents and, as a consequence, balance the respective voltages.

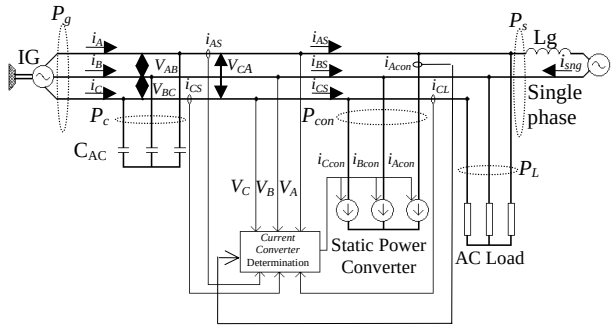

Fig. 11 General structure of the three-phase converter with three phase load.

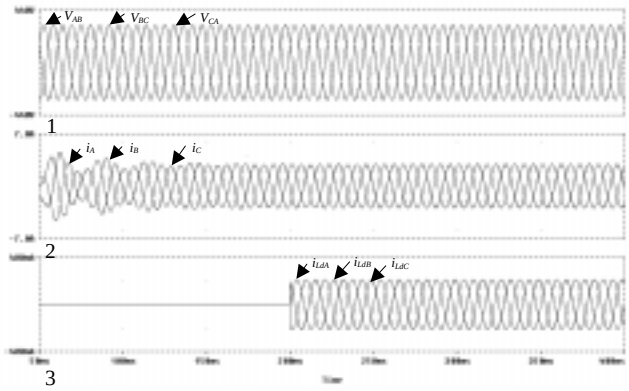

Fig. 12. IG line voltages (1), currents (2), and three phase load currents (3) at the three-phase compensated system with three phase load.

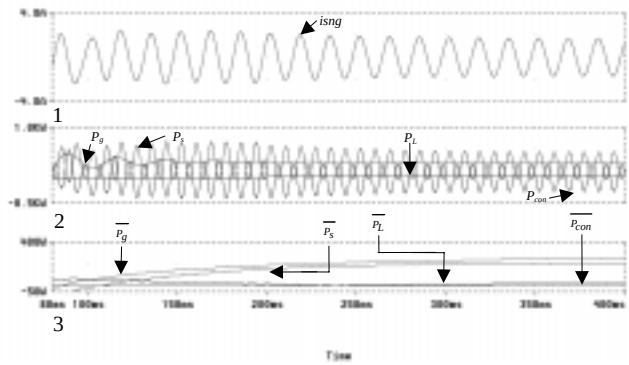

Fig. 13. Single-phase line currents (1), instantaneous power (2), and average power (3) at the three-phase compensated system with three phase load.

C. IG, SPC, unbalanced load, and single-phase grid

In this case a single-phase load is connected to the system, as shown in Fig. 14. The control strategy has shown to be effective also in this situation, balancing the IG currents and voltages, as Fig. 15 indicates.

The power balance is shown in Fig. 16. Before the load connection, the generated power flows to the single-phase line. After the load connection, note that the grid current presents a phase inversion. This means that the generated power is not sufficient to feed the load and the additional power comes from the line, as can be seen by the negative value of P_s. Also in this case the IG operation is balanced.

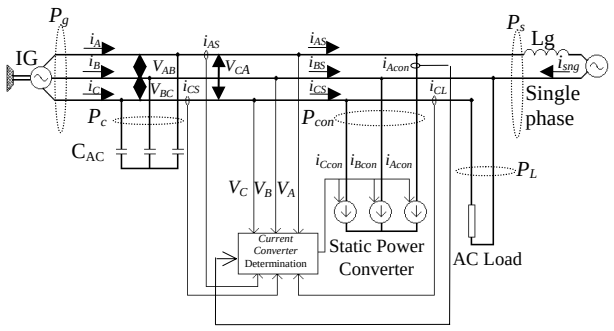

Fig. 14 General structure of the system with single phase load.

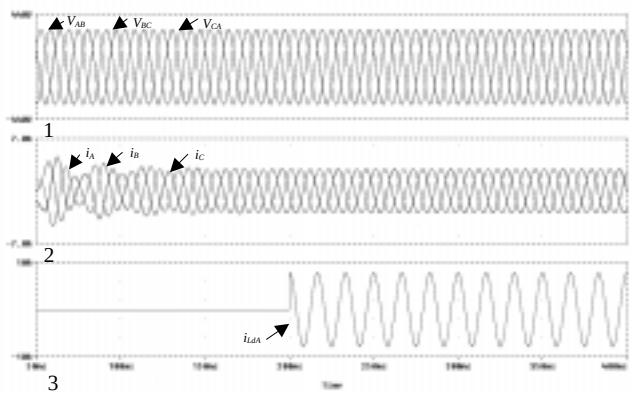

Fig. 15. IG line voltages (1), currents (2), and single phase load currents (3) at the three-phase compensated system with single phase load.

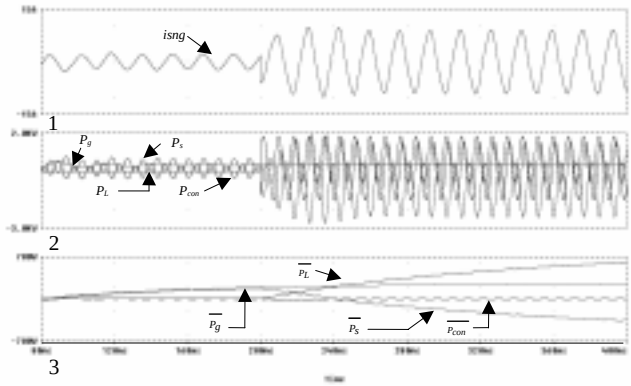

Fig. 16. Single-phase grid current (1), instantaneous power (2), and average power (3) at the three-phase compensated system with single phase load.

V. Conclusions

This article proposes a new strategy to compensate unbalanced operation of an induction generator when connected to a single-phase grid (Steinmetz connection).

A DC/AC static power converter, as used in shunt active power filters generates the currents necessary to equalize the IG currents and, consequently, its voltages.

The current references to the SPC are generated using the instantaneous power theory.

A single-phase SPC has shown to be not adequately due to the fact that the power converter absorb part of the generator power. In a three-phase topology it is possible to circulate this energy producing a quite effective system operation.

The control system is going to be implemented using a DSP (TMS320F240) to sense the necessary input signals and generate the current references, and will be applied to a experimental set-up.

VI. Acknowledgement

The authors would like to acknowledge CAPES and FAPESP (proc. 98/11170-2) for supporting to this project, and Texas Instruments for the DSP donation.

VII. References

[1] D. E. BASSETT and M. F. POTTER, “Capacitive excitation for induction generators,” *AIEE Transactions*, vol. 54, pp. 540-543, 1935.

[2] C. F. WAGNER, “Self-excitation of induction motors,” *AIEE Transactions*, vol. 58, pp. 47-51, Feb. 1939.

[3] E. H. WATANABE and A. N. BARRETO, “Self-excited induction generator force-commutated rectifier system operating as a DC power supply,” *IEE Proceedings*, vol. 134, Pt. B, no. 5, pp. 255-260, 1987.

[4] L. WANG and S. JINA-YI, “Effects of long-shunt and short-shunt connections on voltage variations of a self-excited induction generator,” *IEEE Transactions on Energy Conversion*, vol. 12, no. 4, pp. 368-374, Dec. 1997.

[5] E. G. Marra and J. A. Pomilio, “Self-excited induction generator controlled by a VS-PWM bi-directional converter for rural applications,” *Proceedings of APEC’98*, pp. 116-122, Anaheim, USA, Feb. 1998.

[6] E. G. Marra and J. A. Pomilio, “Self-Excited induction generator controlled by a VS-PWM converter providing high power-factor current to a single-phase grid,” *Proceedings of IECON’98*, Aachen, Germany, pp. 703-708, Aug. 1998.

[7] W. A. Moncrief, “Practical application and selection of single-phase to three-phase converters,” *Proceedings of IEEE/IAS Rural Electric Power Conference*, pp. D3-1/D3-9, 1996.

[8] T. F. Chan, “ Effect of rotational direction on the performance of a three-phase induction generator connected to a single-phase power system,” *IEEE International Electrical Machines and Drives Conference Record (IEMDC’97)*, pp. MB1-6.1-MB1-6.3, Milwaukee, USA, May. 1997.

[9] J. L. Bhattacharya, J. L. Woodward, “Excitation balancing of a self-excited induction generator for maximum power output,” *IEE Proceedings*, vol. 135, Pt. C, no. 2, pp. 88-97, Mar. 1988.

[10] M. O. DURHAM., R. RAMAKUMAr, “Power system balancers for an induction generator,” *IEEE Transactions on Industry Applications*, vol. IA-23, no. 6, pp. 1067-1072, Nov. 1987.

[11] O. J. M. SMITH, “Three-phase induction generator for single-phase line,” *IEEE Transactions on Energy Conversion*, vol. 2, no. 3, Sep. 1987.

[12] H. AKAGI, Y. KANAZAWA and A. NABAE, “Instantaneous reactive power compensator comprising switching devices without energy storage components,” *IEEE Transactions on Industry Applications*, vol. IA-20, no. 3, pp. 625-630, 1984.

[13] R. Szczesny and M. A. Ronkowski, “New equivalent circuit approach to simulation of converter - induction machine associations,” *Proceedings. of the European Conf. on Power Elec. and Applic. (EPE'91)*, pp. 4/356-4/361, Firenze, Italy, 1991.

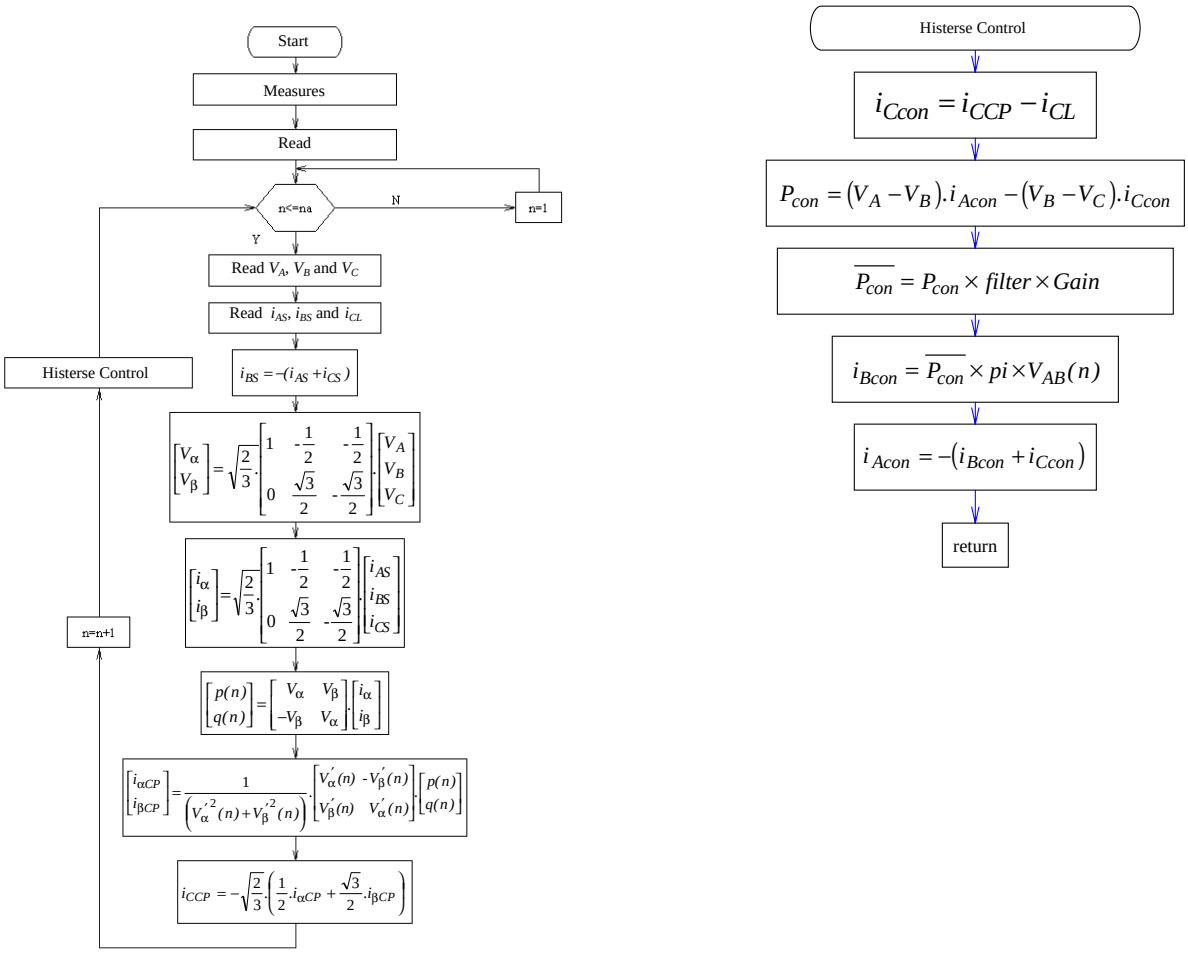

Fig. 17 – Fluxogram of the current references determination.