A 6kW RECTIFIER, UNITY POWER FACTOR, THREE-PHASE, NON-DISSIPATIVE COMMUTATION IN DC-DC CONVERTER AND SYNCHRONISED CONTROL IN FREQUENCY.

CARLOS HENRIQUE G. TREVISO

Departamento de Engenharia Elétrica
Centro de Tecnologia e Urbanismo
Universidade Estadual de Londrina.
Campus Universitário - Rod. Celso Garcia Cid
(PR 445), Km 380, CEP 86051-990
Londrina - PR - Brasil
E-mails:treviso@uel.br

V. J. FARIAS, J. B. VIEIRA Jr., L. C. de FREITAS

Departamento de Engenharia Elétrica
Centro de Ciências Exatas e Tecnologia
Universidade Federal de Uberlândia
Campus Sta. Mônica - Bloco 3N - CEP 38400-902 -
Uberlândia - MG - Brasil

Abstract - **This paper presents a three-phase rectifier, unity power factor, non-dissipative commutation in DC-DC converter and synchronized control in frequency, working with 89% of global efficiency and low level do RFI. The proposed structure allows the operation with high switching frequency. The output voltage is controlled by PWM with a constant frequency. The operation principle, theoretical analysis from DC converter, relevant equations, current balance control technique and experiences results, are showed in this paper.**

I. INTRODUCTION

In Brazil, a few sectors really worry about RFI. Only national industries that produces equipment's for the exacting international markets and for the telecoms are obrigated to realize RFI tests in your equipment's.

Contacts with very important manufacturers in rectifier productions, concluded that the building of a rectifier able to supply a 100A output current and 60V output voltage in direct current, over the characteristics showed in resume, and being careful with the RFI noises, with semi-industrialist finishing, would be a valious contribution technical-scientific for the national market.

In the order to illustrate this paper objectives, Fig. 1 shows a block diagram of proposed rectifier.

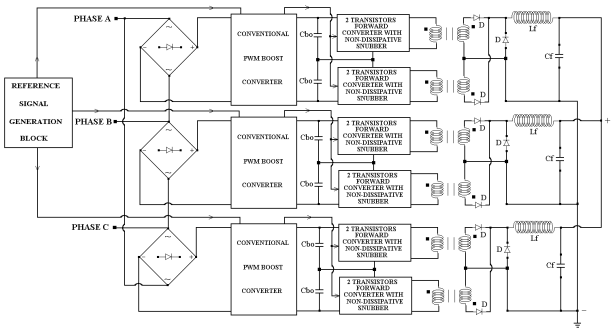

Fig. 1 - Block Diagram of Three-Phase Rectifier.

For the stage AC-DC, the converter Boost PWM conventional as pre-regulator, very known in specialized literature is used. For DC-DC converter is used a two transistors multi-level Forward converter with non-dissipative snubber, being a important contribution for the scientific world.

The frequency "wedding" puts the noise in a well-defined spectrum, becoming easier the attenuation, being that another contribution.

II. SIGNAL GENERATION CIRCUIT

This circuit is implemented to have necessary reference signals to do the "wedding" of frequency from all converters of three-phase rectifier.

Fig. 2 shows the electric scheme circuit.

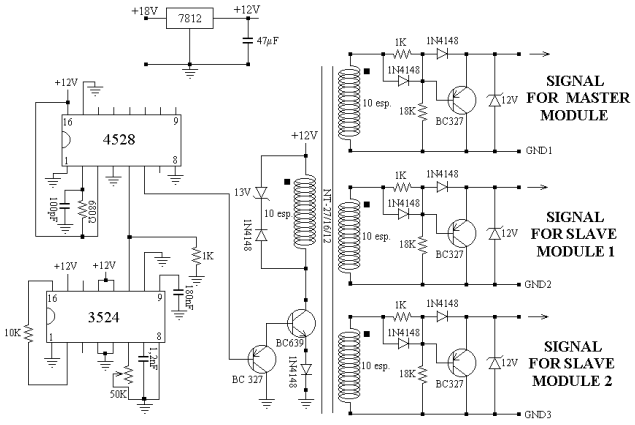

Fig. 2 - Electric Scheme Circuit of Signal Generation.

This circuit is put in a whole AC-DC and DC-DC and will be called master module and the others whole will be the slave module.

III. THE BOOST CONVERTER LIKE PRE-REGULATOR

The Boost converter with right control technical allows to have a sinusoidal input current and in phase with the voltage, besides having a output voltage control.

To produce the pre-regulator control was used the CI3854, which block diagram is showed in Fig. 3.

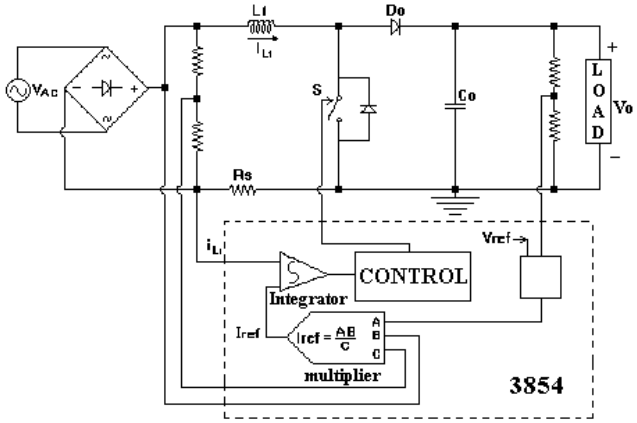

Fig. 3 - Block Diagram Control in Boost Converter.

The CI3854 use the mode average current control.

The complete electric scheme circuit with all the projected components for a 2200W power and output voltage of 185 a 250 VAC, is showed in Fig. 4.

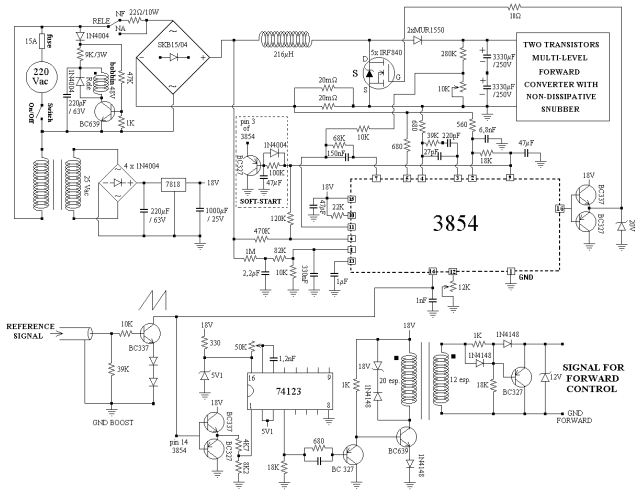

Fig. 4 - Complete Electric Scheme.

In the Fig. 4, the reference signal coming from signal generation circuit, makes the BC337 transistors to discharge the capacitor in pine 14 (3854), "wedding" the frequency and the 12K "trimpot" in pine 12 (3854) adjust the sawtooth amplitude. From the sawtooth, makes the signal isolation that will be used in the DC-DC converter control.

The existent circuit before the rectifier bridge in Fig. 4, makes the current inrush limitation, which time for short-circuit the 22Ω resistor is defined for 9K resistor and 220μF capacitor, with acting time about 2s.

IV. THE DC-DC CONVERTER

For DC-DC converter is used a two transistors multi-level Forward converter with non-dissipative snubber, that consists in two converters of two transistors Forward converter with non-dissipative snubber in primary side and the secondaries connected. Fig. 5 shows the simplified circuit.

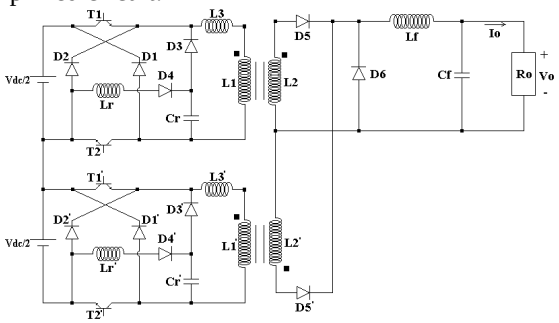

Fig. 5 - Simplified Electrical Circuit For DC-DC Converter.

The advantages of topology in Fig. 5 are: 50% of input voltage (output of Boost converter) in switches and output inductor is projected for double of switching frequency from each Forward converter. The Boost converter works in 100KHz frequency, while each converter primary side works in 50 KHz, however different in 180 degree.

To illustrate the non-dissipative commutation operating from two transistors Forward converter, will be done the structure analysis in Fig. 6.

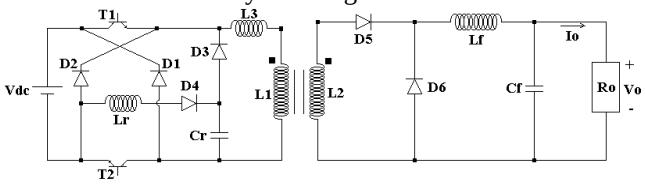

Fig. 6 - Simplified Circuit From Two Transistors Forward Converter With Non-Dissipative Snubber.

The non-dissipative snubber elements in Fig. 6 are: Lr, D3, D4, Cr and L3.

This topology advantage are: a reduce number of components and without a auxiliary transistor to obtain the resonance and for a correct project, to keep the same characteristics from conventional two transistor Forward converter from the control point of view.

For the analysis are made the following considerations:

- All the semiconductors are ideal;
- The input voltage is constant;
- The magnetizing inductance is very big;
- The transformer leakage inductance is negligible;
- Constant output current;
- N1 = N2.

This converter has six work stages for a switching cycle.

FIRST STAGE, **(t_0, t_1)** - Linear stage of current in L3 inductor. It begins when the T1 and T2 transistors are turned on in the same time with zeros currents (ZCS) because L3 inductance. In this stage starts the resonance between Lr and Cr, with voltage in the Cr capacitor

changing from -Vdc to VCr1 value, while the current in the inductor Lr change form zero to iLr1 value, finishing this stage when the D6 diode is blockaded.

SECOND STAGE, **(t_1,t_2)** - This is the PWM stage. Keep occurring the resonance between Lr and Cr, with voltage in Cr, changing from VCr1to +Vdc and the iLr1 current reach the top and decrease to zero, finishing this stage when the T1 and T2 transistors are turned off.

THIRD STAGE, **(t_2, t_3)** - In this stage occur the linear discharging of resonance capacitor. It begins when T1 and T2 transistors are turn off in the ZVS form, due the Cr capacitor be charged in Vdc. The constant output current make the voltage on the resonant capacitor decrease linearly, arriving the zero voltage when finish this stage.

FOURTH STAGE, **(t_3, t_4)** - In this stage occur the resonance between the Cr capacitor and the transformer magnetizing inductance. This stage begins when the voltage in the capacitor become null, polarizing directly the diode D6, due the Io output current. The transformer energy is transferred to the Cr capacitor, finishing this stage when the voltage to reach -Vdc.

FIVETH STAGE, **(t_4, t_5)** - In this stage, the voltage in Cr capacitor is -Vdc polarizing directly D1 and D2 diodes. The current magnetizing flow across D1, D2 and Vdc, diminishing until zero, when finish this stage.

SIXTH STAGE, **(t_5, t_6)** - In this stage occur the clamping of voltage of Cr capacitor in -Vdc. It begins when the magnetizing current becomes null, keeping in this way until to occur turn on of transistors, when finishes this stage, closing the switching cycle.

Fig. 7 shows the equivalents circuits for each stage.

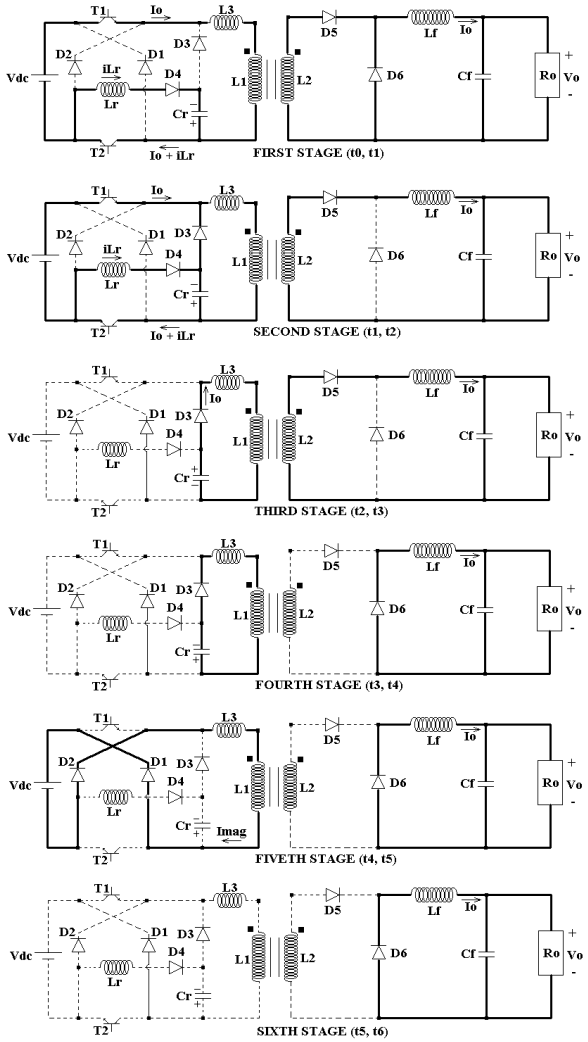

Fig. 7 - Equivalents Circuits For Each Stage.

Fig. 8 shows the theoretical waveforms of one switching cycle.

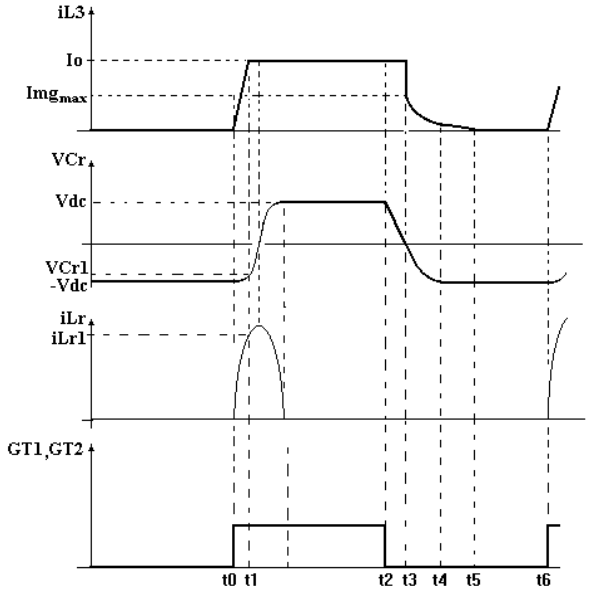

Fig. 8 - Principal Waveforms For The Equivalents Circuits.

The output voltage Vo, can be obtained through operation stage analysis with the assumptions showed previously for the analysis.

Taking the assumptions above, comes the (1):

$$\boxed{\frac{Vo}{Vdc} = g = D - Fs.\frac{\alpha}{\omega o} + \frac{Fs}{2.\omega o.\alpha}}$$

(1)

Where:

Fs = switching frequency;

Fo = resonant frequency;

$$\omega o = 2\pi Fo = \frac{1}{\sqrt{L_R C_R}}$$

(2)

$$\alpha = \frac{(I_0)}{Vdc}\sqrt{\frac{L_R}{C_R}} = \text{normalized conductance} \qquad (3)$$

Fig. 9 shows the conversion range g for equation (1).

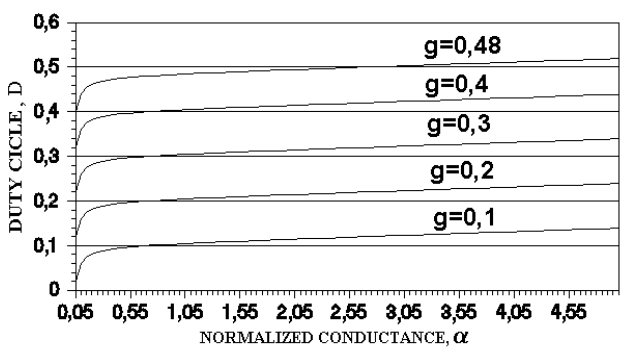

Fig. 9 - Conversion Range of The Converter.

How was showed in the Fig. 9, this converter presents the decrease of gain static in relation the duty cycle for α's bigger. That happens because, for bigger loads, resonant capacitor discharge times become smaller, resulting in a positive medium voltage smaller in the primary transformer.

V. THE CONTROL STRATEGY FOR DC-DC CONVERTER

To do the DC-DC conversion control of each module is used the CI3525. The DC-DC converter switching frequency synchronism with Boost converter frequency is made through of electric circuit showed in Fig. 10.

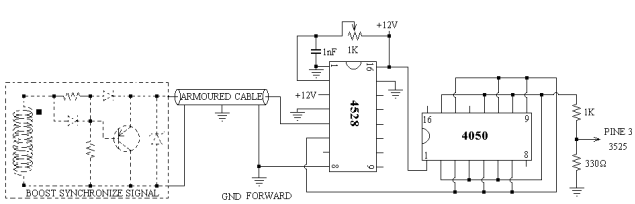

Fig. 10 - Circuit to Synchronize Boost Converter Frequency.

The pine 3 from CI3525 is the entrance to do the synchronism. The signal coming from Boost converter (Fig. 4) has a galvanic insulation end enters in the monostable, producing pulses of 2,8V and 0,5μs large, doing this way the frequency "wedding".

Fig. 11 shows the block diagram for master module control realization.

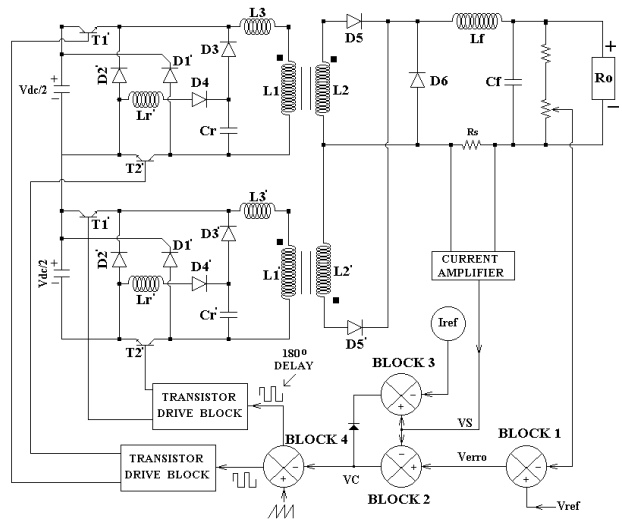

Fig. 11 - Block Diagram of Control Strategy.

The output voltage is showed and compared with a reference voltage producing a Verro signal (block 1). The current amplifier produces a VS voltage signal propositional to output current. The Vs signal is compared with the Verro signal (block 2) and Iref (block 3). The Vc signal can be generated from blocks 2 or 3, depending of the Iref value and compared with a sawtooth (block 4), producing the pulses for the switches. The transistor drive block makes the galvanic pulse isolations.

The Fig. 12 shows the block diagram for the three-phase rectifier.

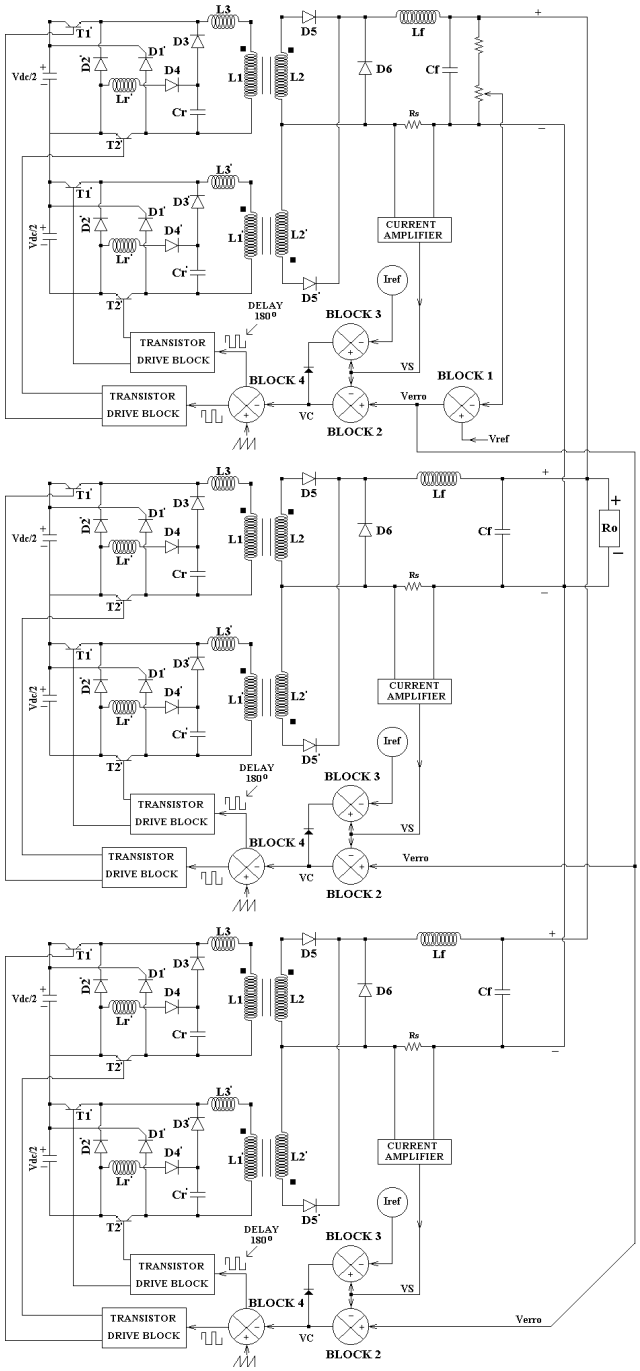

Fig. 12 - Block Diagram For Control of Three-Phase Rectifier.

The outputs from each module are putting in parallel, consequently to the same potential. Considering equals the current sensor values, just put in the master module the block 1 that produces Verro voltage and make the responsible circuit for procurement of the VS voltage signal accompanies the Verro signal. These blocks must have the same gain. Therefore, the Verro signal is more common to the three modules. The same beginning is valid for the Iref, means, Iref is common to all the modules.

VI - RFI SUPPRESSION TECHNIQUES

Adopted some techniques for conducted and radiated emissions noise reductions such as: special worry with the lay-out, separation between primary and secondary, use of capacitors kind X and Y for common and differential noise suppressions, armourplating in transforms and inductors, module armourplating, armourplating input filter and dissipation snubber in all semiconductors of potency.

Fig. 13 shows the electric circuit projected for a module, adopting all the technique for RFI noise reductions.

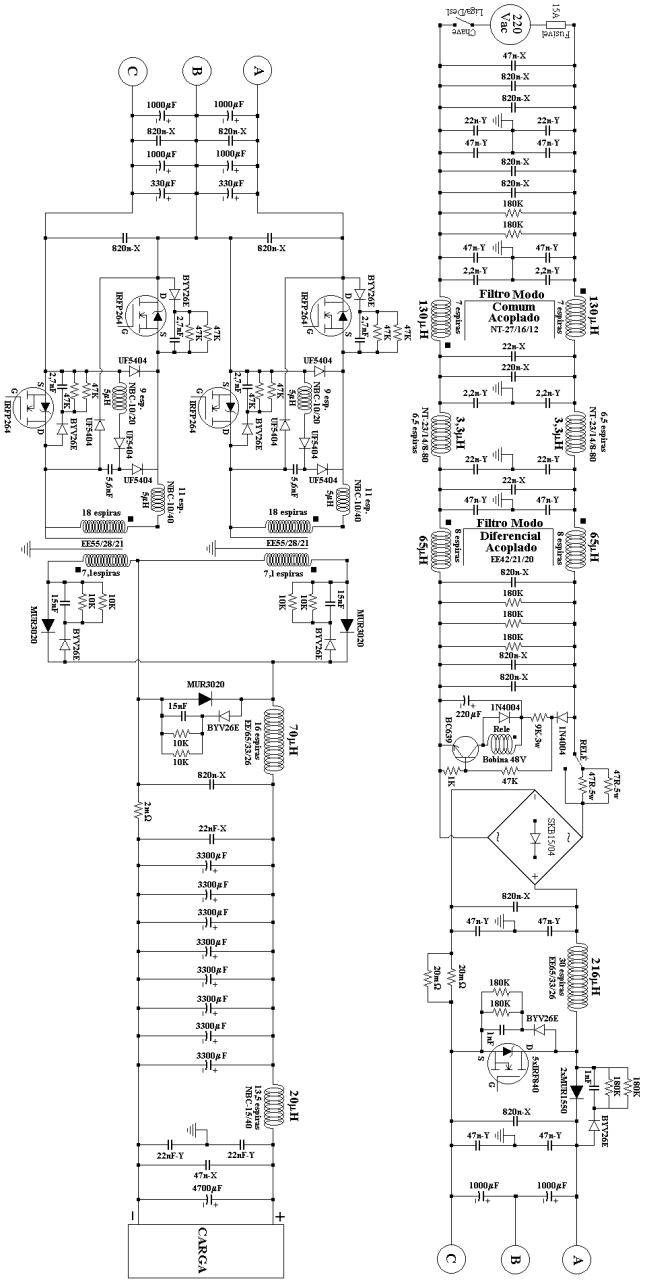

Fig. 13 - Electric Scheme of Each Module Power.

VII - EXPERIMENTS RESULTS

The experiments results were obtained from master module, because the others modules will have the same conducts and the dynamics answer for the three-phase rectifier.

Fig. 14 shows the voltage waveform and the input current for 2000W power output.

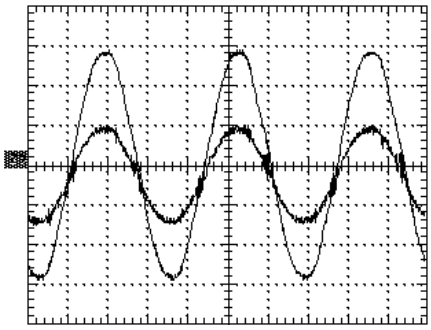

Fig. 14 - Waveform of Input Current and Voltage For 2000W Output Power.

Fig. 15 presents the power factor curve varying from 300W to 2000W power output.

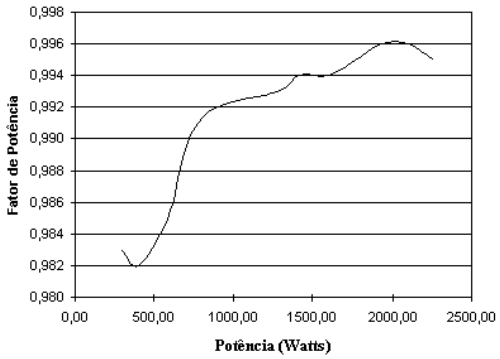

Fig. 15 - Power Factor Curve.

Fig. 16 presents the voltage and current waveforms in the mosfet that makes part of two transistors Forward converter with non-dissipative snubber resonant circuit.

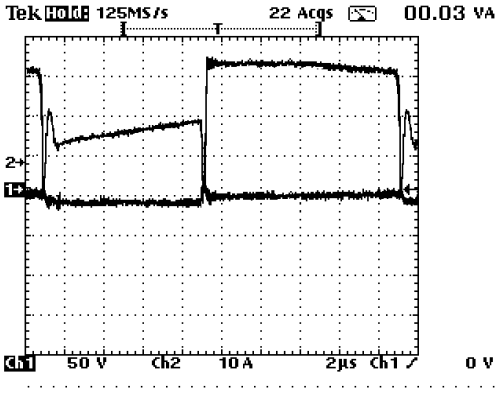

Fig. 16 - Current and Voltage Waveforms in The Mosfet of Resonant Circuit

The Fig. 17 give the efficiency for each module.

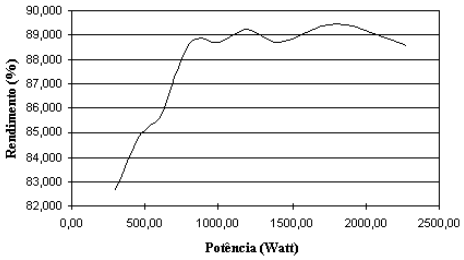

Fig. 17 - Global Efficiency of Master Module.

Fig. 18 shows the dynamics answer for three-phase rectifier, from 50% to 100% load change and 1KHz frequency.

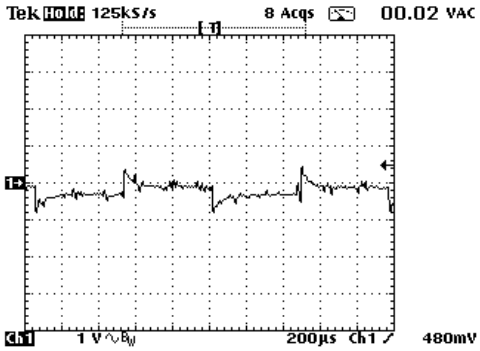

Fig. 18 - Dynamics Answer of Three-Phase Rectifier With 3000W to 6000W Load Changing.

It is worth noting that the control had a great performance, because no oscillation was observed in load change moment.

Fig. 19 shows the three-phase rectifier photography.

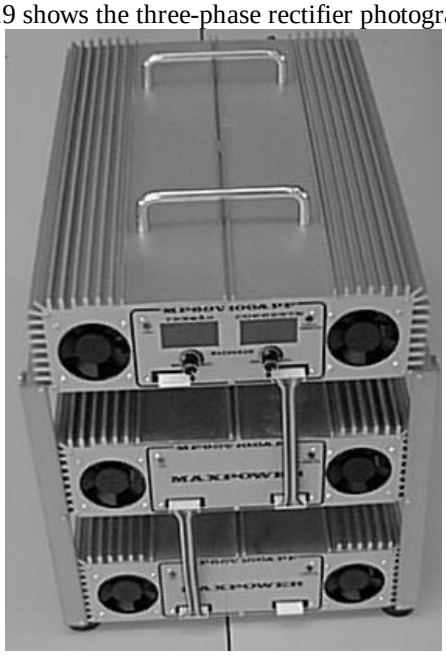

Fig. 19 - Three-Phase Rectifier Photography.

VIII. CONCLUSIONS

This paper had as objective to present a three-phase rectifier with power factor unity, low harmonic distortion current, reduced conducted and radiated emissions noise level, high efficiency, output voltage with galvanic isolation and 6KW output power.

This became possible a conventional PWM Boost converter used as pre-regulator and for DC-DC converter, 2 two transistors Forward converter with non-dissipative snubber with secondary together, means, multi-level.

The rectifier material cost was estimated in US$1.326,13 dollars, quoted in São Paulo. Considering the company gain that varies from 40% to 50%, the equipment material cost would be reduced if it was made in mass production and acquired the components directly from the manufactures.

The experiment results prove the three-phase rectifier has global efficiency in 89% and power factor in 0,996 for nominal power.

The rectifier structure put in modules with power divisions makes possible to specify a rectifier for any power zone, no just limited in the three-phase structure.

This rectifier can be used in telecom companies, experiment labs and so even in metallic part solderation.

IX. REFERENCES

[1] TREVISO, C. H. G.; “Retificador de 6KW, Fator de Potência Unitário, trifásico, Comutação não Dissipativa na Conversão CC/CC e Controle Sincronizado em Freqüência.”, Tese de Doutorado, Uberlândia - MG, Março/99.

[2] de FREITAS, L.C.; GOMES, P.R.C.; " A High-Power High-Frequency ZVS-ZCS-PWM Buck Converter Using a Feedback Resonant Circuit", IEE PESC'93 Record, pp. 330-336.

[3] PROFESSIONAL EDUCATION SEMINARS WORKBOOK; " Power factor Correction Circuits - Topologies & Control - Section 4", APEC'93.

[4] de MELLO, L.F.P.; "Projetos de Fontes Chaveadas", Érica, 3ª Edição.

[5] e SILVA, C. de S.; "Power Factor Correction With The UC3854", UNITRODE, pp. 9/287-9/296.

[6] da CRUZ, D.F.; "Contribuição ao Estudo dos Fenômenos de Radio-Interferência Provocados Por Fontes Chaveadas: Análise, Propostas de Solução e Resultados Experimentais.", Dissertação de Mestrado, Uberlândia, 1996.

[8] TREVISO, C.H.G.; da COSTA, A.V.; de FREITAS, L.C.; "A New ZVS-ZCS-PWM Boost Converter With Unit Power Factor Operation", IEEE APEC'94, pp. 404-410.

[9] TREVISO, C.H.G.; PEREIRA, A. A.; FREITAS, L. C.; FARIAS, V. J.; VIEIRA Jr., J. B.; “A 1,5 KW Two Transistors Forward Converter Using Non-Dissipative Snubber”, IEEE PESC’98, pp. 696-700, Maio/98, Fukuoka, Japão.