A Switched Power Amplifier for Audio Applications

C.A. Bissochi Jr, F. Vincenzi R. S., J.B. Vieira Jr, V.J. Farias and L. C. Freitas

Universidade Federal de Uberlândia – DEENE

Uberlândia - MG, Brazil

***Abstract* – A new switched power amplifier for audio applications is presented in this paper. This new topology is derived from a forward converter and its principle of operation is very simple, described in only two stages. This new amplifier has higher efficiency than other commercially available power amplifiers with the same output characteristics. Operating principles and theoretical analysis are described and verified by simulation. A 10W prototype was built and experimental results are shown. The efficiency measured was around 80%. This paper also suggests other applications to this same converter. Moreover, other topologies also derived from the forward converter such as multi level converters are presented.**

I. Introduction

Early audio amplifiers used tubes (valve, vacuum tube, triode, pentode, etc.). Throughout the years, solid state devices started to replace the tubes, but it was only a few decades ago that solid state amplifiers achieved a grasp on the market.

Amplifiers are classified by the characteristics of its output stage. Class A is defined as a conduction angle of 360 degrees. Class B is defined as a conduction angle of 180 degrees. Class C is defined as a conduction angle of less than 180 degrees.

The important factor of class A operation is that both devices are always on. There is no condition where one or the other is turned off. Class A is the most inefficient of all power amplifier designs, averaging only around 20%. Because of this, these amplifiers are large, heavy and run very hot, due to its continuous operation at full power. Despite the disadvantages, Class A designs are inherently the most linear, return very clean signals and are usually employed in the pre amplification stage.

Class AB operation allows only a small amount of current to flow through both devices, but enough to keep each device operating so they respond instantly to input voltage demands. The inherent non-linearity of class B designs is eliminated, without the gross inefficiencies of the class A design. It's this combination of good efficiency (around 50%) and linearity that makes class AB the most popular audio amplifier design.

Class B and Class C amps aren't used in audio.

The switched power amplifier proposed here has the same output characteristic of a Class A amplifier, since it amplifies the input signal along 360 degrees. Another outstanding feature of this power amplifier is its higher efficiency when compared to conventional audio amplifiers. Also, the distortion measured is very low when the converter operates in the band width for which it was designed.

II. Audio Switched Amplifier

The topology proposed to implement the switched power amplifier [1] consists of four power switches arranged in a half-bridge configuration which imposes current to modulate the voltage on capacitor V_C. The basic structure is shown in Fig. 1.

L_{F1} and L_{F2} constitute two current sources which allow the voltage modulation across the output capacitor C.

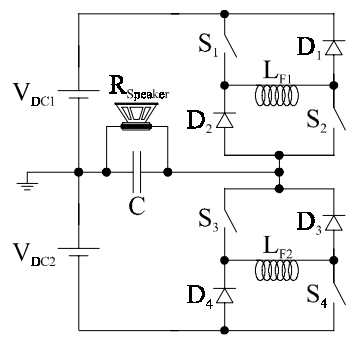

Figure 1 - Proposed converter circuit

III. Principle of Operation

The operating principle is described in two stages for each switching cycle, as follows:

First stage - When switches S_1 e S_2 are turned on, the voltage across the capacitor rises due to the current source I_{LF1}, implemented by V_{DC1} and L_{F1}. In this case, the voltage ΔV_C on the capacitor increases, as indicated in Fig 2. During this stage, if there is energy stored in the filter inductor L_{F2}, the diodes D_3 and D_4 are directly polarized. This energy returns to the power supply V_{DC2} through the output capacitor C, contributing to increase its voltage ΔV_C, as indicated in Fig 2. If there isn't energy in the inductor L_{F2}, it will not contribute to the capacitor output voltage.

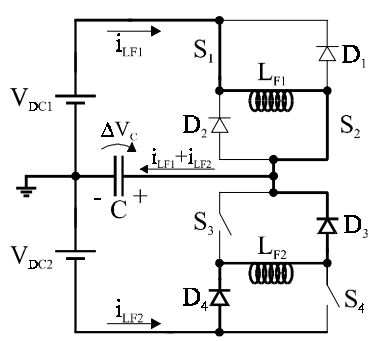

Fi0gure 2 – Converter on first operation stage

Second stage – This stage is the complement of the first stage. When switches S_3 and S_4 are turned on, the current source (V_{DC2} and L_{F2}) forces the voltage on the capacitor to decrease, indicated in Fig. 3 by ΔV_C. The diodes behavior is the same as described in the first stage. If there is no energy in the inductor L_{F1}, it will not contribute to the capacitor output voltage.

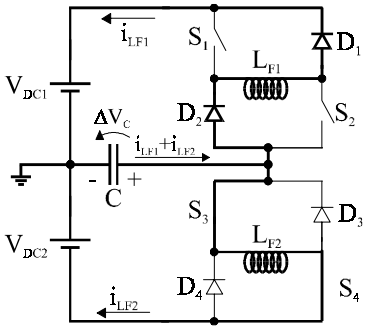

Figure 3 – Converter on second operation stage

IV. Simulation Results

In order to illustrate the operation of the proposed power amplifier, a simulation was performed using the following parameters:

$V_{DC1} = V_{DC2} = 12V$
$L_{F1} = L_{F2} = 1mH$
$C = 8\mu F$

The voltage sources V_{DC1} and V_{DC2} receive and supply energy and the power flows in both directions. The output voltage follows the input reference signal.

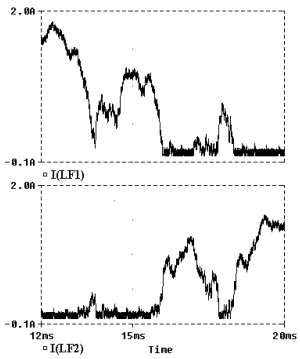

(a) I_{LF1} (top) and I_{LF2} (bottom)

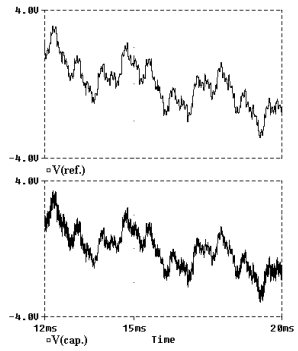

(b) V_{ref} (top) and $V_{Cap.}$(bottom)

Figure 4 – Simulation waveforms of the power amplifier

V. Control Strategy

For reproducing music as naturally as possible, simplicity and a minimum number of components is a key element in the amplifier design, and is well reflected in the quality of amplifier designs. The fewer pieces in series with the signal path, the better [2].

According to the mentioned above, an extremely simple control circuit was developed, constituted of a comparator with a narrow hysteresis band, as illustrated in Fig. 5.

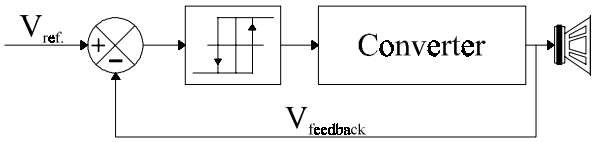

Figure 5 – Control circuit block diagram

VI. Experimental Results

In order to verify the theoretical analysis and simulation results, a 10W prototype of the audio amplifier was implemented according to Fig.1. The circuit parameters are as follows:

$V_{DC1} = V_{DC2} = 12V$
$L_{F1} = L_{F2} = 1mH$
$C = 8\mu F$

The switches are MOSFET IRFZ 48 and the diodes are MBR 1045.

The amplifier input received an audio signal from a CD player and it was connected to two 8Ω, 12'' sub woofer speakers, two 8Ω, 6'' mid range speakers and two 8Ω tweeters connected in parallel.

From Fig. 6 one can see that the output voltage follows the reference signal. Experimental and simulated results cannot be directly compared, since the experimental reference signal is an audio signal generated from a CD player. For simulation, a reference signal was generated through software by the addition of different frequency waveforms, simulating a random signal.

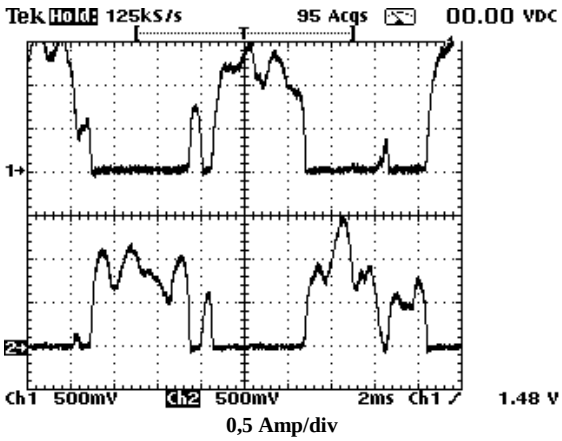

(a) I_{LF1} (top) and I_{LF2} (bottom)

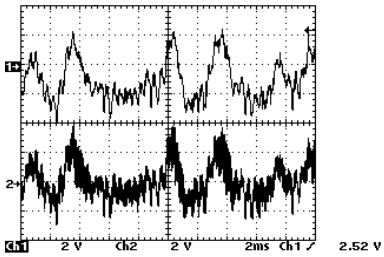

(b) $V_{ref.}$ (top) and $V_{Cap.}$ (bottom)

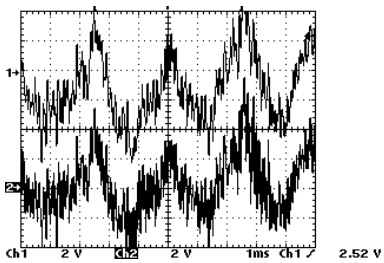

(c) $V_{ref.}$ (top) and $V_{Cap.}$ (bottom)

Figure 6 – Experimental waveforms of the power amplifier

The prototype was not fully explored because a 10W power input was enough to produce a good and high level of sound.

For a better understanding of the converter's behavior, Bode plots were drawn from experimental raw data. For the experiment, a reference sinusoidal signal of 1V amplitude was provided by a signal generator and a dc input voltage of 70V was supplied by the symmetric sources, for a voltage gain of 10, 20, 30, 40 and 50.

The data shown in Tables 1, 2 and 3 below were collected for three different load conditions. Table 1 refers to no load operation. Table 2 refers to a 100Ω resistive load operation and Table 3 refers to a 10Ω resistive load operation.

From the Bode plots it is observed that the curve falls in a rate of approximately 12dB/octave, characterizing a 2nd order system response. It can also be observed from the Bode plots that for higher gains the cut off frequency decreases as load increases.

TABLE 1 – No load condition

GAIN: 10		**GAIN: 20**		**GAIN: 30**		**GAIN: 40**		**GAIN: 50**	
Freq *kHz*	Ampl *V*	Freq *kHz*	Ampl *V*	Freq *kHz*	Ampl *V*	Freq *kHz*	Ampl *V*	Freq *kHz*	Ampl *V*
1	10	1	20	1	30	1	40	1	50
2	10	2	20	2	30	2	40	2	50
3	10	3	20	3	30	3	40	3	50
4	10	4	20	4	29	3,5	40	3,2	52
5	10	5	21	5	28	3,8	38	3,4	54
6	10	6	21	6	24	4	38	3,6	52
7	10	7	19	7	18	4,4	36	3,8	52
8	10	8	14	8	14	4,8	34	4	50
9	10	9	12	9	13	5,5	28	4,4	44
10	9	10	10	10	8,5	6	25	4,8	40
11	8	11	8	12	7	7	18	5,5	30
12	6.8	12	6,4	15	5,5	8	14	6	26
14	4.8	15	5,2			9	12	7	17
16	4	20	3			10	9	8	13
20	3					12	6	9	10
						15	4	10	8,7
						20	2,8		

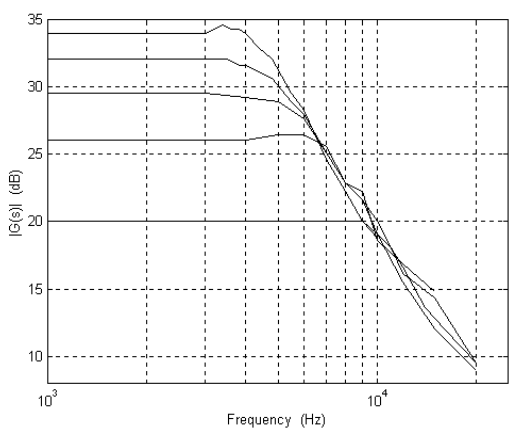

Figure 7 – Bode plot for no load condition

TABLE 2 - 100Ω resistive load

GAIN: 10		**GAIN: 20**		**GAIN: 30**		**GAIN: 40**		**GAIN: 50**	
Freq *kHz*	Ampl *V*	Freq *kHz*	Ampl *V*	Freq *kHz*	Ampl *V*	Freq *kHz*	Ampl *V*	Freq *kHz*	Ampl *V*
1	10	1	20	1	30	1	40	1	50
2	10	2	20	2	30	2	40	2	50
3	10	3	20	3	30	3	40	3	48
4	10	4	20	4	29,5	4	40	4	50
5	10	5	19	5	28	5	32	5	36
6	10	6	19	6	24	6	26	6	26
7	10	7	17	7	19	7	19	7	18,5
8	10	8	15	8	15	8	15	8	14
9	10	9	12	9	13	9	13	9	12
10	9	10	10	10	10	10	10	10	10
11	7,7	11	8	11	8	11	8	12	7
12	6,8	12	7	12	7			15	5
13	6	15	5	15	5			20	3
15	4,4	20	3	20	3				
20	3								

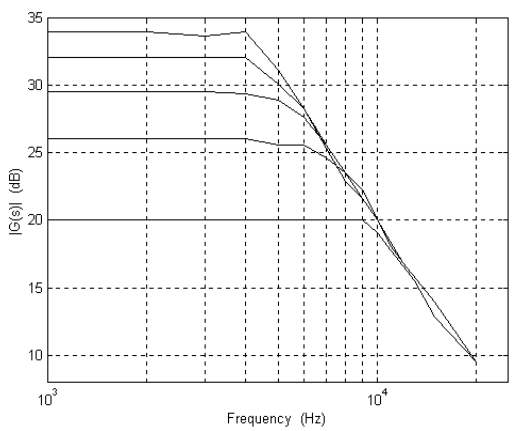

Figure 8 – Bode plot for 100Ω resistive load

TABLE 3 - 10Ω resistive load

GAIN: 10 220mA		GAIN: 20 460Ma		GAIN: 30 750mA		GAIN: 40 1,15A		GAIN: 50 1,45A	
Freq *kHz*	Ampl *V*	Freq *kHz*	Ampl *V*	Freq *kHz*	Ampl *V*	Freq *kHz*	Ampl *V*	Freq *kHz*	Ampl *V*
1	10	1	20	1	30	1	40	1	50
2	10	2	20	2	30	2	40	2	50
3	10	3	20	3	28	3	36	3	40
4	10	4	20	4	26	4	30	4	31
5	10	5	19	5	22	5	24	5	24
6	10	6	18	6	18	6	19	6	19
7	10	7	15	7	15	7	15	7	15
8	10	8	13	8	12	8	12,5	8	13
9	9,5	9	10	9	10	9	10	9	10
10	8,6	10	9	10	8,5	10	8	10	8
11	7	11	7,3	11	7	11	7	11	7
12	6	12	6,4	12	6	12	6	15	4,5
15	4	15	4,8	15	4,4	15	4,5	20	2,5
20	2,5	20	2,5	20	2,5	20	2,5		

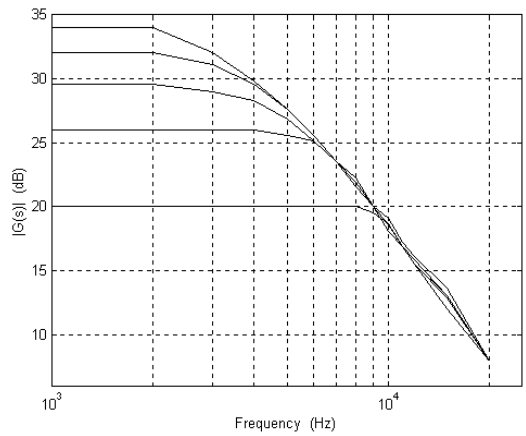

Figure 9 – Bode plot for10Ω resistive load

Fig. 10 shows the efficiency versus the output voltage peak and the input voltage ratio. In order to obtain the data to plot this graph, the voltages V_{DC1} and V_{DC2} were fixed at 80V, the output power was maintained constant at 40W and the reference signal used in this experiment was a 60Hz sinusoidal waveform.

When the output voltage peak is slightly lower than the input voltage (V_{DC1} and V_{DC2}), the converter operates with higher efficiency. For this particular experiment the efficiency measured was around 75%. Higher efficiency can be obtained for greater power and voltage operation.

The load used was a variable resistance.

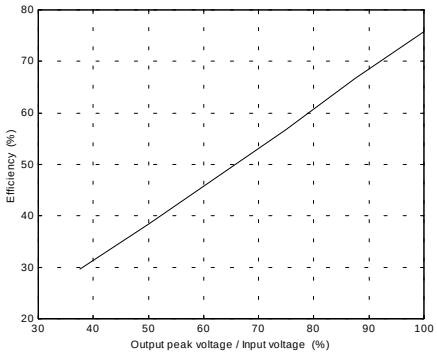

Figure 10 – Efficiency versus
Output voltage peak / V_{DC} input voltage source

The proposed power amplifier can also operate over a large power range and with high output voltage. Moreover, this power amplifier is able to operate in all load range, i.e. from no load to full load.

VII. OTHER APPLICATIONS

In addition to audio applications, the converter proposed here can also be employed in:

- No-breaks
- Electronic ballast
- Motor drives
- AC/AC regulator[1]

[1] See "A New AC/AC Serial Regulator Using a Capacitor as the Serial Component" in this same Conference.

Furthermore, the topologies shown in Figs 12, 13, 14, 15, 16 and 17, can be implemented from the basic cell (Fig. 11), derived from the forward converter.

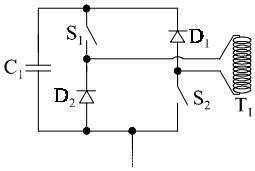

Figure 11 – Basic cell derived from the forward converter

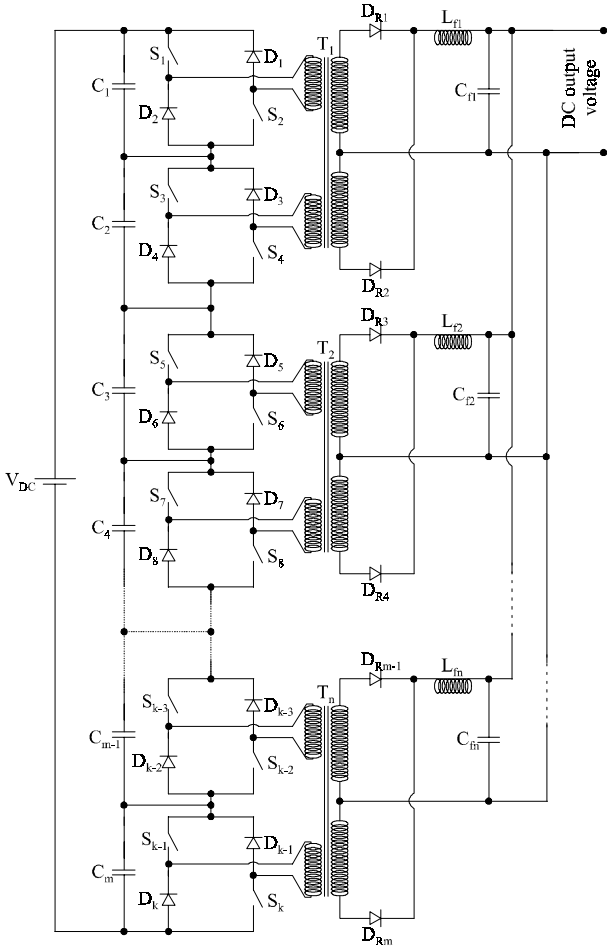

Figure 12 – Multi level full-bridge converter
for current sharing operation [3]

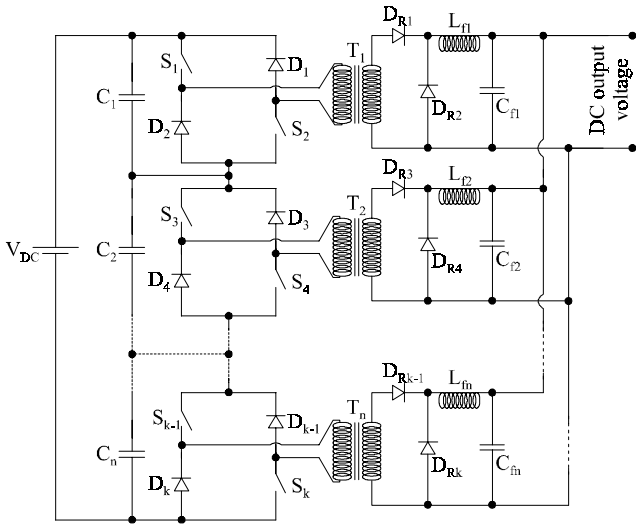

Figure 13 – Multi level forward converter for current sharing operation mode [4]

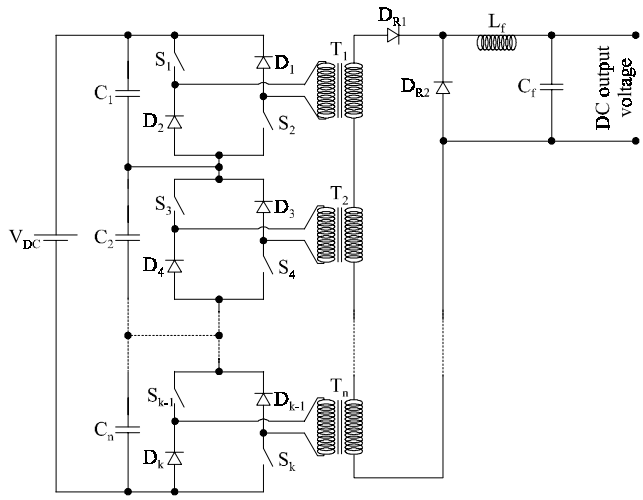

Figure 15 – Multi level forward converter for high voltage application [4]

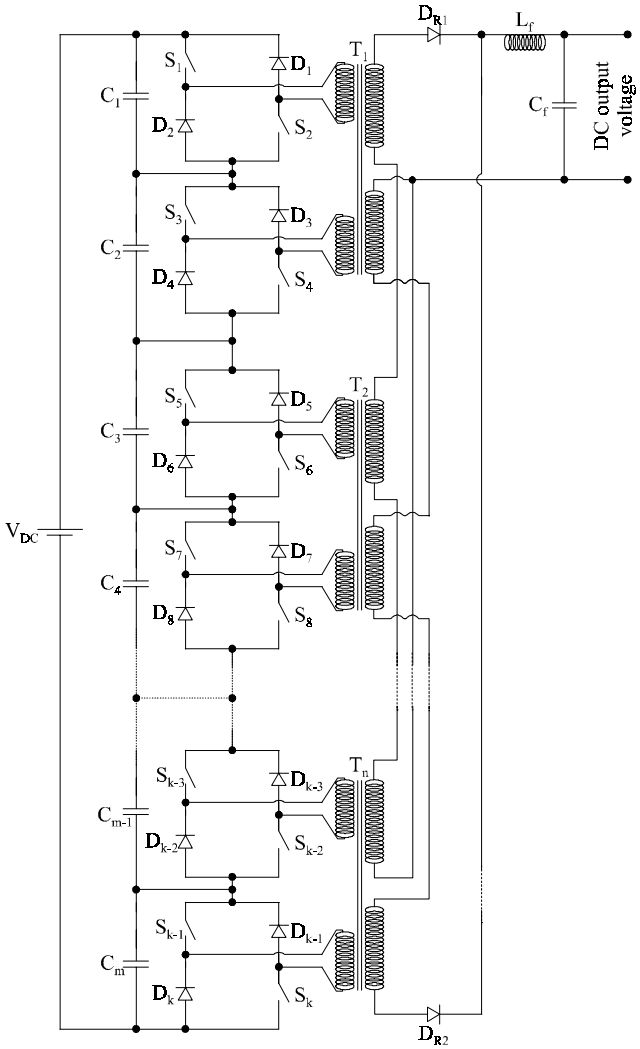

Figure 14 – Multi level full-bridge converter for high voltage application [3]

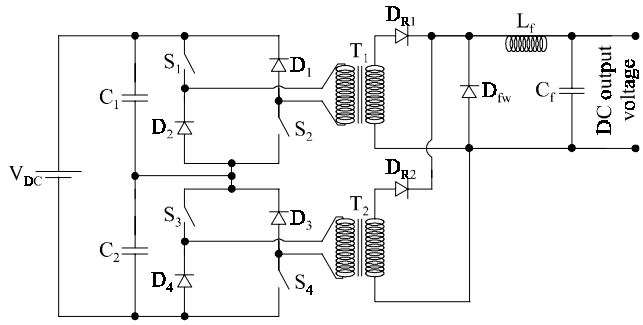

Figure 16 – Two level forward converter

For the converter in Fig. 16, the output filter is designed for two times the switching frequency.

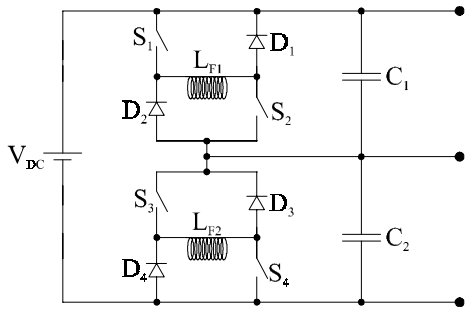

Figure 17 – Stabilized symmetric power supply [5]

VIII. CONCLUSION

To verify the relevance of the proposed power amplifier, operating principles and the control strategy were described and verified by simulated and experimental results obtained from a 10W prototype. The efficiency measured was around 75%.

As it is clearly observed from the waveforms, the output voltage follows the input reference signal in all frequencies depending only on the capacitor and inductor specification, according to the frequency response plotted above.

The proposed switched power amplifier has the same output characteristic of a Class A amplifier, but presents higher efficiency.

Furthermore, due to the nature of the load, undesirable high frequency ripple is naturally filtered and does not interfere the reproduction of the input signal.

With a suitable design, the hysteresis comparator can be easily replaced by a fixed switching frequency control. This strategy is being implemented and results will be presented in future work.

IX. BIBLIOGRAPHY

[1] – Brazilian Patent Pending – number: MU7900538-1

[2] – http://www.passlabs.com/seclassa.htm

[3] – Brazilian Patent Pending – number: MU7900543-8

[4] – Brazilian Patent Pending – number: MU7900539-0

[5] – Brazilian Patent Pending – number: MU7900544-6

[6] – Mohan, N.; Underland, T.M.; Robins, W.P.; "Power Electronics: Converters, Applications and Design" , John Wiley & Sons, Singapore, 1989.

[7] – Presmman, A. I.; "Switching Power Supply Design", McGraw Hill International Editions, Engineering Series, Singapore, 1992.