Three-Phase Rectifier Unit for Telecommunication Applications Using Single-Phase Rectifier Modules

Marcelo Lobo Heldwein, Alexandre Ferrari de Souza and Ivo Barbi
Federal University of Santa Catarina – Electrical Engineering Department
INEP – Power Electronics Institute – P.O. Box 5119 – Florianópolis – SC – Brazil - 88.040-970
Phone: 55.48.331.9204 – Fax: 55.48.234.5422 – Internet: http://www.inep.ufsc.br

Abstract **– This paper presents a three-phase rectifier unit composed of single-phase modules, directed to attend the demands of the telecommunications standards. The use of single-phase modules in this application brings the need of controlling the power flow, which must be balanced among the phases. In order to obtain equal power processing in each phase, the condition of equal output currents in each single-phase module suffice, once the output voltage is common to all of them. A simple technique is used to attend this condition, which consists in the application of current mode control in the output stages. Theoretical analysis and simulation, along with experimental results are provided in this digest.**

I. Introduction

The use of three-phase rectifier units with high quality currents and excellent output regulation is an obligation if one intends to meet telecommunications standards for high power. These standards demand size, weight, performance, harmonic distortion, load and line regulation, low levels of EMI and in the case of three-phase rectifiers the restriction of three-wire supply, without neutral connection.

In order to meet these standards one can chose basically:

1. One three-phase rectifier followed by one DC-DC insulated converter;
2. One three-phase rectifier followed by several DC-DC insulated converters with paralleled outputs;
3. Three or more one-phase rectifiers followed by three or more DC-DC insulated converters with paralleled outputs [1];
4. One single topology, capable to comply all requirements.

The power factor correction stages, commonly use controlled switches, most of them bi-directional. This requirement is also extended for the output stages.

If the approach (1) is chosen, one should use very high capacity semiconductors or utilize parallel techniques. In many techniques there is low frequency commutation that leads to big volumes, weight and expressive current harmonics. The topologies that operate at high frequency commonly lead to complex control and modulation. With approach (2) the same rectifier techniques must be used and limitations are very similar to option (1) techniques. Option (4) leads to high capacity components and, depending on the employed techniques, there are some difficulties with control, input currents or physical dimensions.

The option (3) schematic is presented in Fig. 1. In this approach, the application of well-known single-phase power factor techniques is then possible and the good characteristics of dividing the power flow in three phases are maintained. But other difficulties appear and depending on the application these are more or less expressive.

This option has its main disadvantage the high number of semiconductors used, which leads often to a high cost. The main advantages are:

- small physical dimensions;
- possibility of operation with two phases;
- modularity;
- high quality currents drained from the AC mains;
- good overall efficiency.

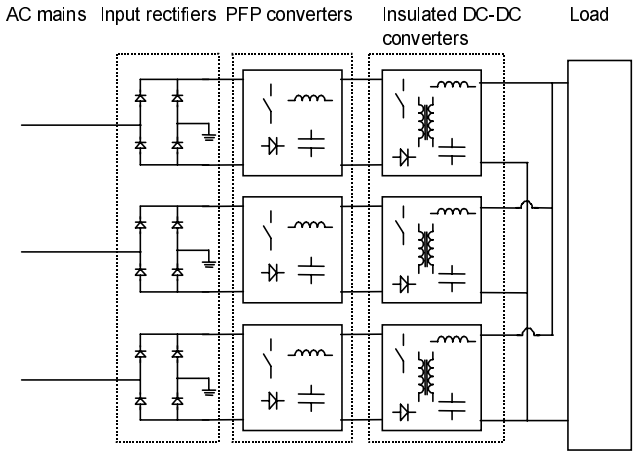

Fig. 1 – Three single-phase high power factor rectifiers followed by three DC-DC converters with paralleled outputs.

The fact that limits the use of this technique is the complexity inherent to the control circuits usually employed, once that the power flow control in each phase must be precise in order to maintain zero neutral current.

This work presents a simple way to overcome this difficulty through the use of current mode control applied to the output stages.

II. Proposed Topology and Control Strategy

A. Proposed Topology

The chosen topology for the proposed rectifier unit is presented in Fig. 2. It can be noticed that there isn't any connection to the neutral of the AC mains.

The topology chosen for the proposed rectifier presents a Y connection on the input, so that the voltages on the front-end rectifier are phase voltages. Accomplished this, current and voltage specifications to each module are still the same to those of a single-phase rectifier unit.

In the pre-regulation stages, the boost converter operating at continuous conduction mode with average current mode control is used due to its high efficiency and high quality input current. A lossless snubber [5] for di/dt limitation during switch turn-on is used in order to lower commutation losses from boost diode reverse recovery.

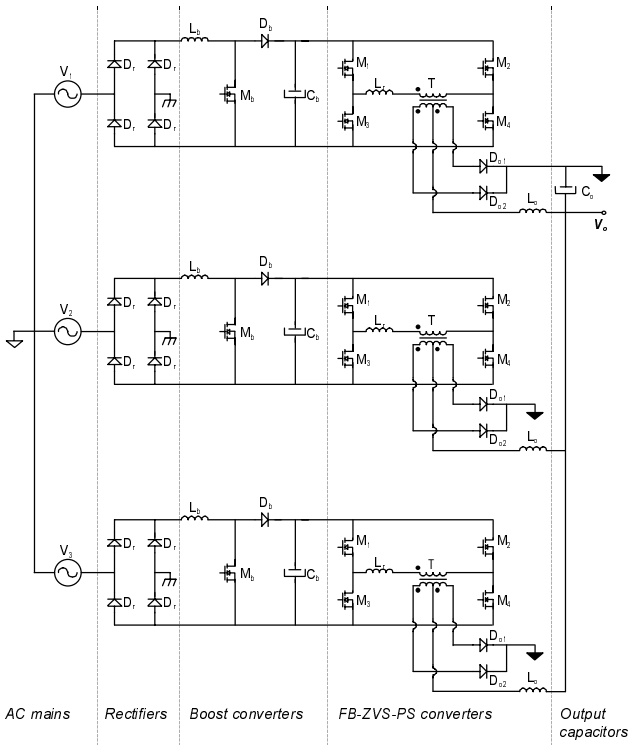

Fig. 2 – Simplified diagram for the proposed three-phase rectifier unit.

B. Control Strategy

The control strategy employed is based on current mode control that makes each DC-DC converter with an output characteristic of a current source with controlled voltage. This control is applied only to the output stages while the pre-regulator stages are completely independent.

This technique consists on the linkage of current and voltage control loops, where the current loop is faster and the voltage loop serves for generation of current reference. To ensure equal output currents in all the DC-DC converters, only one voltage loop is responsible for the reference generation. Therefore, all three modules have the same current reference and once it is guaranteed equal gains on current feedback loop the output currents will be equal.

The block diagram for the proposed control system is shown in Fig. 3. All compensation is made with zeroes and poles, using classical control compensation techniques.

III. Relevant Analysis

A. Input Current Analysis for the Proposed Rectifier

The input current analysis for the proposed rectifier considers differences among output voltages in the power factor pre-regulators. The Fig. 4 is used to accomplish this analysis.

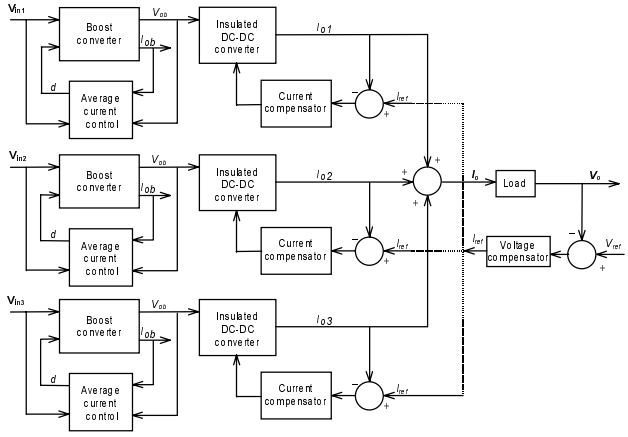

Fig. 3 – Block diagram for the proposed control strategy.

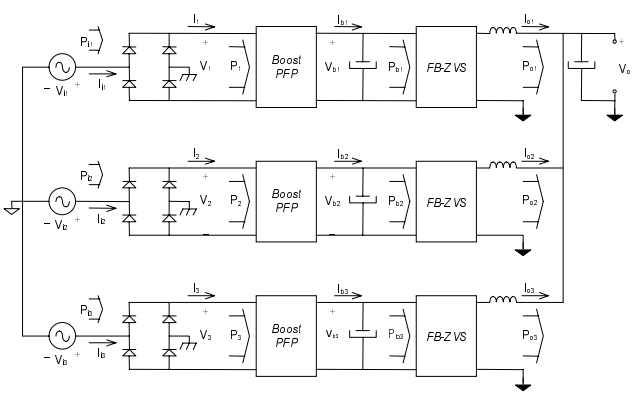

Fig. 4 – Power flow in each single-phase rectifier unit.

In order to simplify the analysis, the following assumptions are made:

Input voltages are considered equal, sinusoidal and displaced by 120°;

The input stages (*Boost PFP*) generate input currents that are also sinusoidal.

Input voltages are given by:

$$v_{ij}(t) = V_p \cdot \sin(\omega \cdot t + \phi_j) \quad [1]$$

Where "j" is the phase number ($j = 1,2,3$) and ϕ_j is the displacement angle

$$(\phi_1 = 0^o,\ \phi_2 = -120^o,\ \phi_3 = +120^o) \quad [2]$$

The output voltage is common to all the modules. Through the application of current mode control on the output stages (FB-ZVS), equilibrium in output currents is obtained. Thus:

$$v_{o1}(t) = v_{o2}(t) = v_{o3}(t) = V_o \quad [3]$$

and, $$i_{o1}(t) = i_{o2}(t) = i_{o3}(t) = \frac{I_o}{3} \quad [4]$$

Therefore the power delivered of each module are equal:

$$P_{o1} = P_{o2} = P_{o3} = \frac{P_o}{3} \quad [5]$$

Considering that the efficiency of each single-phase rectifier unit are almost the same:

$$P_{i1} = P_{i2} = P_{i3} = \frac{P_i}{3} \quad [6]$$

The input power of each module is given by:

$$P_{ij} = \frac{1}{T} \cdot \int_0^T I_{pj} \cdot V_p \cdot \sin(\omega \cdot t + \phi_{Ij}) \cdot \sin(\omega \cdot t + \phi_j) dt \quad [7]$$

Which gives as result:

$$P_{ij} = I_{pj} \cdot V_p \cdot \cos(\phi_{Ij} - \phi_j) \quad [8]$$

Through the power factor pre-regulators, equality between ϕ_{Ij} and ϕ_j is obtained, hence:

$$I_{p1} = I_{p2} = I_{p3} = I_p \quad [9]$$

The analysis of this result implies in that the input currents have the same amplitude and the displacement angle is equal to the input voltages ones.

The application of boost power factor pre-regulators followed by DC-DC insulated converters with current mode control guarantees equilibrated input currents and equal power distribution among each module.

B. Effect of Unbalanced Input Currents

The Fig. 5 (a) presents the input module for the proposed rectifier unit. The input is Y connected, without neutral connection.

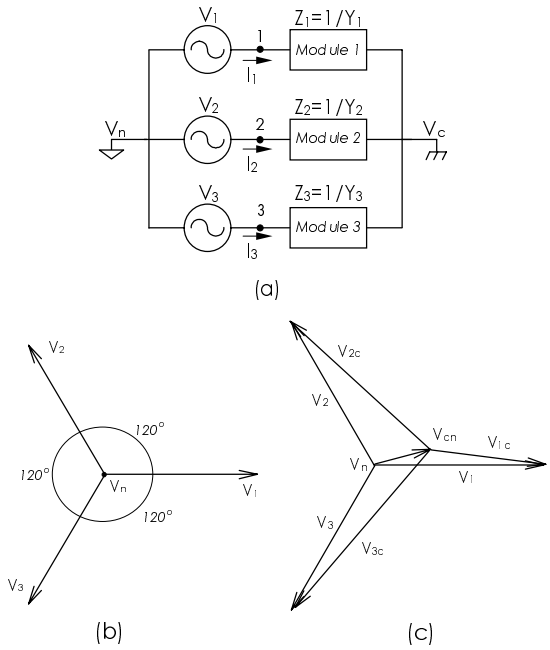

Fig. 5 – (a) Proposed rectifier unit input model, (b) fasorial diagram of input voltages, (c) fasorial diagram of a three phase unbalanced system.

With the knowledge that input currents have approximately the same format that input voltages, due to the action of PFP's, one can represent the modules as impedances with resistive nature. The fasorial analysis can then be used to represent the involved quantities.

The fasorial diagram presented in Fig. 5 (b) shows the input voltages with respect to neutral power mains. It is considered that three voltages are equilibrated, neglecting differences and imperfections that do not invalidate this analysis.

If the input impedances are unbalanced and no neutral connection is established, the voltage between "c" and "n" is different from zero, and this difference is then called neutral displacement voltage. The Fig. 5 (c) shows the fasorial diagram in a three-phase unbalanced system.

Therefore, the neutral displacement voltage is given by:

$$V_{cn} = \frac{V_1 \cdot Y_1 + V_2 \cdot Y_2 + V_3 \cdot Y_3}{Y_1 + Y_2 + Y_3} \quad [10]$$

One can then verify that an unbalanced system can generate input voltages larger and smaller than the expected ones. The limit values are presented in Table I.

TABLE I
LIMIT VALUES FOR UNBALANCED SYSTEMS

	Limit value
Neutral displacement voltage (V_{cn})	$V_{IN\text{-}peak}$ [V]
Input voltage (V_{1c}, V_{2c} and V_{3c})	1.732·$V_{IN\text{-}peak}$ [V]
Displacement angle among (V_{1c}, V_{2c} and V_{3c}) and (V_1, V_2 and V_3)	30 [°]

If the power delivered by each phase is equal, then the neutral displacement voltage is zero and therefore the system will not present any over or under voltages. It can also be seen that unbalance may bring input currents with displacement angles different from zero with respect to power mains voltages, and this fact leads to power factors different from the unity in each phase. With respect to this analysis one can see the importance of controlling the power flow in each phase module.

IV. EXPERIMENTAL RESULTS

In order to verify the proposed control strategy a prototype was built with the following specifications:

- Input voltage: 220V
- Output voltage: 60V
- Rated output current: 75A
- Efficiency: greater than 90 %
- High quality input currents

Each phase module is composed of a boost PFP followed by a FB-ZVS-PS converter.

A. Pre-regulation stages

The complete power stage for the boost converter used on the pre-regulation stages is shown in Fig. 6.

The lossless snubber is composed of L_a, C_a, D_{a1} and D_{a2}. This snubber is used to limit the current slope during reverse recovery of the diode D_b over the switch M_p. A high efficiency can then be achieved, once that the main loss in the boost converter is that due to the recovery of the boost diode.

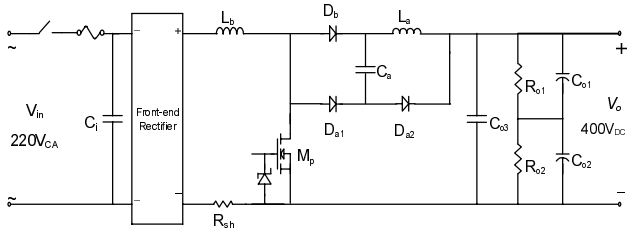

Fig. 6 – Power diagram of the pre-regulation stages.

Used components:

- M_b : IRFP460
- D_b , D_{a1} , D_{a2} : MUR860
- L_a : EE-30/07 Thornton – N = 5 turns – 4 x 24AWG
- C_a : 100nF/250V
- C_{o1} , C_{o2} : 2 x 680μF/250V
- R_{o1} , R_{o2} : 180K/½W
- C_i : 2μF/250V
- R_{dc} : 100R/10W
- C_{o3} : 270nF/630V

Fig. 7 presents input current and voltage in one of the modules. It can be noticed that the drained current follows the input voltage, achieving a power factor close to the unity.

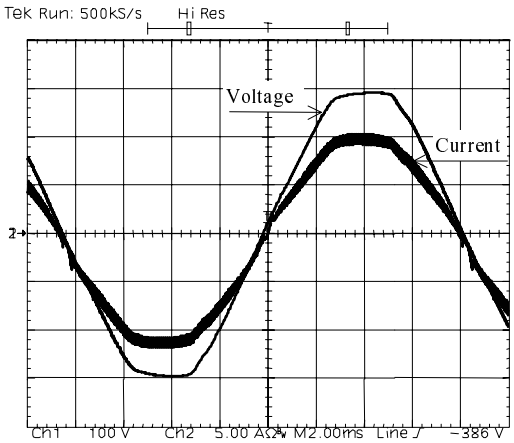

Fig. 7 – Input current (5A/div) and voltage (100V/div) in one of the modules.

The details of the commutation, close to the peak value of the input voltage, in the switch are shown in figures 8 and 9. The turn-on (Fig. 8) is clearly non-dissipative, once the current raises with a limited slope. The switch turn-off is dissipative, but as can be seen in Fig. 9, the time taken during this commutation is very small so that the losses do not justify the presence of any kind of additional circuitry, which would certainly increase the conduction losses in the converter.

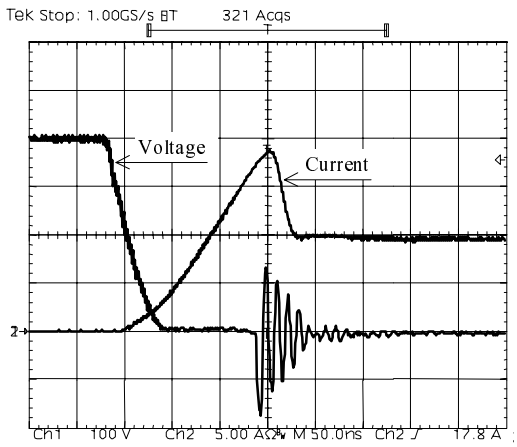

Fig. 8 – Turn-on in the switch M_p(b). Current (5A/div) and voltage (100V/div).

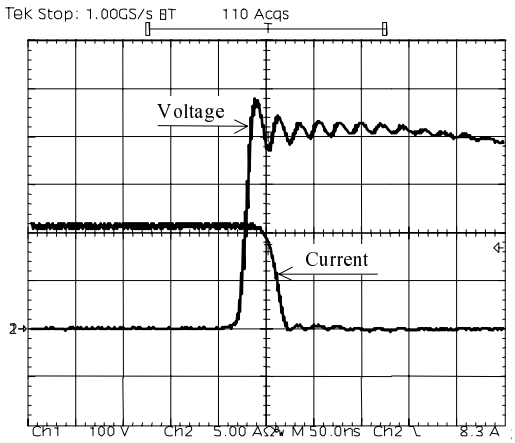

Fig. 9 – Turn-off in the switch M_p(b). Current (5A/div) and voltage (100V/div).

Fig. 10 shows the achieved efficiency for the boost converter with the lossless snubber. The efficiency is approximately 97%.

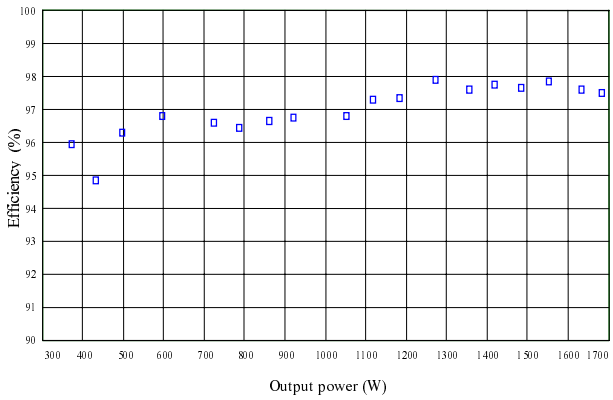

Fig. 10 – Efficiency of the boost converter with snubber.

B. Output stages

The complete power stage for the CC-CC converter used on the output stages is shown in Fig. 11. No auxiliary circuit is used in this converter in order to facilitate commutations at light load.

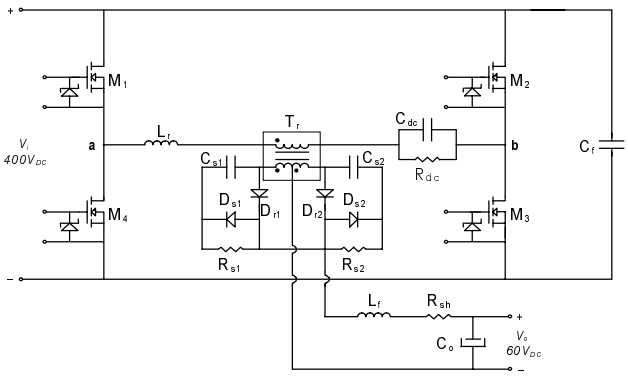

Fig. 11 – Power diagram of the FB-ZVS-PS converter used in the output stages.

Used components:

- M_1 , M_2 , M_3 , M_4 : IRFP460
- D_{r1} , D_{r2} : MUR1530
- L_r: EE-42/15 Thornton
  N = 44 turns 3 x 26AWG
- T_r: EE-65/39 Thornton
  N_1 = 20 turns 17 x 26AWG
  N_2 = 5 turns 46 x 26AWG
  N_3 = 5 turns 46 x 26AWG
- C_{s1} , C_{s2} : 10nF/400V
- R_{s1} , R_{s2} : 33K/3W
- D_{s1} , D_{s2} : MR854
- C_{dc} : 2*u*F/250V
- R_{dc} : 100R/10W
- C_f : 270nF/630V

Current and voltage across one switch of the non-critical leg are presented in Fig. 12. Fig. 13 presents the waveforms for a switch of the critical leg. In these figures, it can be noticed that the commutation on the critical leg is more difficult, once the load current does not help this commutation.

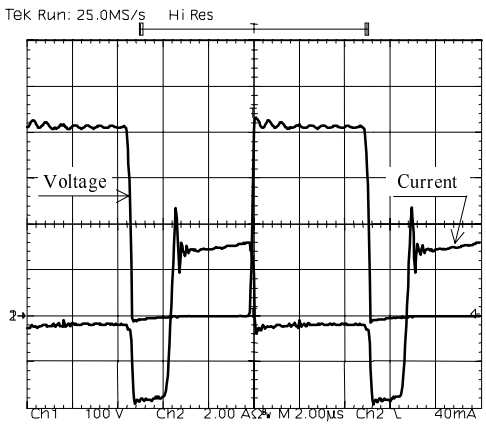

Fig. 12 – Current (2A/div) and voltage (100V/div) in one of the switches of the non-critical leg.

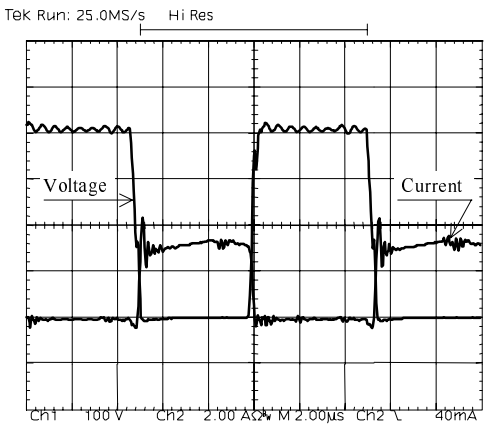

Fig. 13 – Current (2A/div) and voltage (100V/div) in one of the switches of the critical leg.

Voltage V_{ab} and the current flowing in the primary are shown in Fig. 14.

The three modules were connected to a same phase for verification of the balance of the drained currents and this result is shown in Fig. 15, where it is noticed that the three currents are put upon practically.

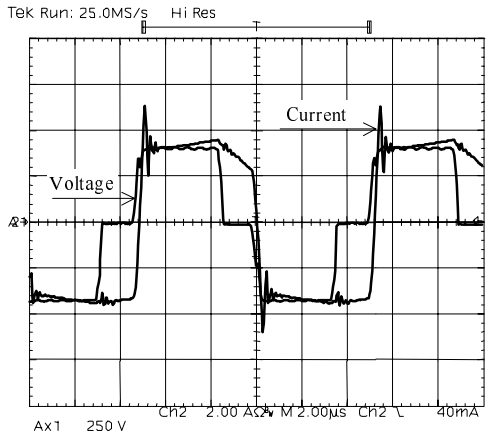

Fig. 14 – Current in the primary (2A/div) and voltage V_{ab} (250V/div).

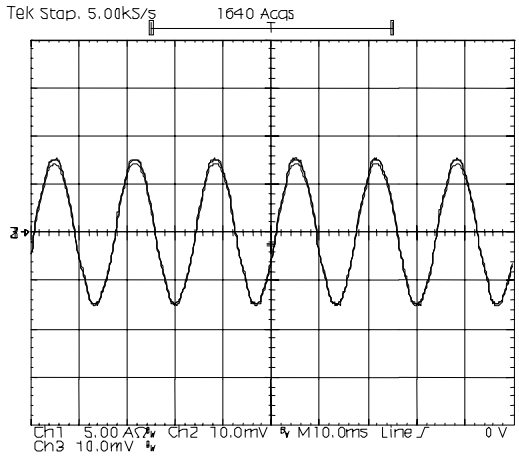

Fig. 15 – Input currents (5A/div) with all modules connected to the same phase.

In Fig. 16 are shown the input currents and the voltage in one of the phases, obtained with the prototype for a delivered power of 4300W, with neutral connection. The differences among the currents come from the difference among the input voltages that, besides the format, also present amplitude variation, what explains the differences among the amplitudes of the currents.

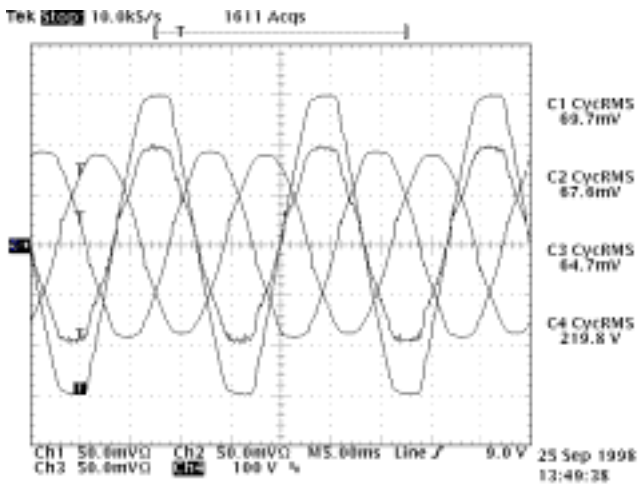

Fig. 16 – Input currents (5A/div) and voltage in one of the phases (100V/div), for the proposed rectifier unit.

The control technique guarantees that the power flow in each phase is practically the same, that is to say, the phase has the greater input voltage will present minor current. It was obtained an efficiency of approximately 90% and THD of input currents smaller than 4.5%, while for the input voltages this rate was of up to 2.9%.

Figures 17, 18 and 19 illustrate the input currents of the prototype in operation, without the neutral connection. In these illustrations the balance can be observed among the drained currents, attesting the effectiveness of the control strategy. The maximum power obtained in the output, without the neutral connection, was of approximately 2000W.

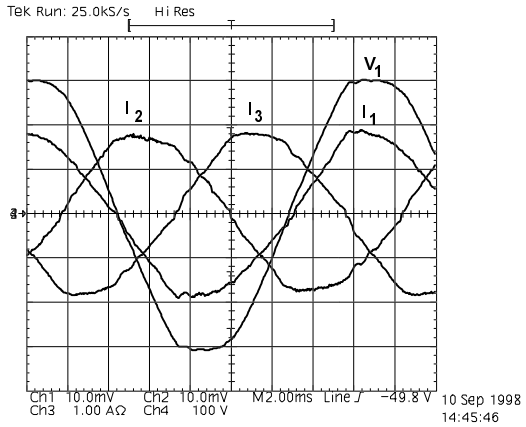

Fig. 17 – Waveforms without neutral connection. Input currents (1A/div), voltage in phase 1 (100V/div).

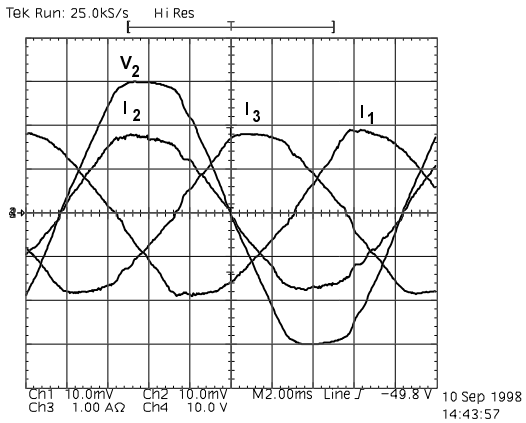

Fig. 18 – Waveforms without neutral connection. Input currents (1A/div), voltage in phase 2 (100V/div).

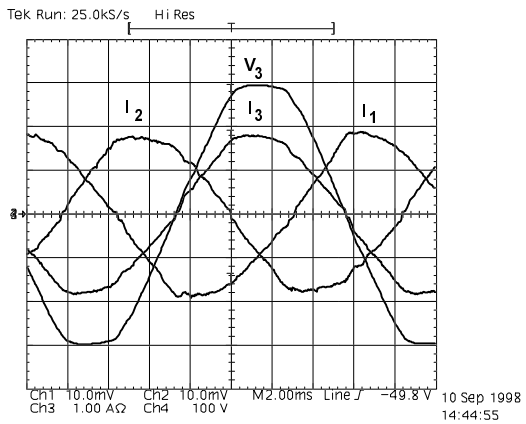

Fig. 19 – Waveforms without neutral connection. Input currents (1A/div), voltage in phase 3 (100V/div).

V. CONCLUSION

This work presented the theoretical and practical study of a three-phase rectifier unit for application in telecommunications. It was proposed simple control strategy to guarantee balanced input currents in three-phase rectifier that are composed of one-phase modules.

The main characteristics of the proposed system are: its modularity, the employment of simple and well-known techniques, high quality of the input currents and of the output voltage, good efficiency and possibility of continuity in the operation with fall of phase or module fail. Experimental results were presented to confirm the accomplished theoretical analysis.

VI. REFERENCES

[1] C. DENIS, J. DAVE & C.J. TUCK, "A High Density 48V 200A Rectifier with Power Factor Correction – an Overview", IEEE – INTELEC`93, pp. 118–125.

[2] R. A. FISCHER, K. D. T. NGO, M.H. KUO, "A 500 kHz, 250 W DC-DC Converter with Multiple Outputs Controlled by Phase-Shifted PWM and Magnetic Amplifiers", HFPC'88 Records, pp. 100-110

[3] J.L.F. VIEIRA, I. BARBI, "On the Design of a High Performance 25A/48V Rectifier Unit". IEEE – INTELEC'92, pp. 540–547.

[4] R. REDL, N.O. SOKAL, L. BALOGH, "A Novel Soft-Switching Full-Bridge DC/DC Converter: Analysis, Design Considerations and Experimental Results at 1.5 kW, 100 kHz", PESC'90, pp. 162-171

[5] N. MACHIN, T. VESCOVI, "Very High Efficiency Techniques and their Selective Application to the Design of a 70A Rectifier", IEEE – INTELEC`93, pp. 126–133.

[6] GAIDZINSKI. P. R. "Unidade retificadora de alta performance, 1500W – 25A, para telecomunicações", Florianópolis, 1993. Dissertation (Electrical Engineering Master Degree) – INEP/EEL, Federal University of Santa Catarina.