Project Development and Construction of the Three Phase PWM Power Supply with Power Factor Correction for Use with the Plasma Ion Nitriding Reactor

Jean-Paul Dubut*, Andrés Ortiz Salazar, Alexandre Magnus F. Guimarães,
Marcos Silva de Santana e Clodomiro Alves Júnior
INPE/CRN*
CEP: 59001-970 – Natal, RN – Brazil
jean@jerimum.crn.inpe.br
UFRN/DEE/LECA
CEP: 59072-970 – Natal, RN – Brazil
andres@leca.ufrn.br, magnus@leca.ufrn.br,
santana@leca.ufrn.br, alvesjr@dfte.ufrn.br

***Abstract* - This paper describes the project development and the construction of a 25 kW AC/DC three-phase PWM power supply with power factor correction for use with the plasma ion nitriding reactor. The main power circuitry is built on a industrial IGBT's three-phase bridge rectifier module configured in a boost regulator topology and supplies by means of an electronic chopper, the -850 Vdc pulsated output voltage. To attend the Brazilian electrical standard with regard to power factor and harmonic current injection in the electrical line, this power supply is provided of three independent circuits for power factor correction, one in each phase. The control strategy employed is the average current-mode control and is implemented using PWM techniques to control the line current. The events sequence, tasks control, functional management of the modules, activation and protection subsystems are executed by a dedicated microcontroller unit which provides the stand alone operation of the equipment. The control of the nitriding process, if required, is accomplished by an external PC microcomputer connected to the RS 232 serial port of the three-phase PWM power supply. The project implementation, circuits simulation and results prediction were carried out using specific computational tools such as MatLab, PSpice, LabView and programming in C-language.**

I. INTRODUCTION

In order to understand the purpose of this development [1], it is necessary to remind the importance of the textile industry in the regional economy of the states in the northeast of Brazil. Due to the high level competition established by the globalization market surge the necessity to operate more efficient textile machines, using inexpensive and reliable components and requiring less maintenance. This has led these industries to use alloy components and the new treated materials to increase the superficial hardness and, this way, resist better to the mechanical wear. In the last years the processing techniques for hardening materials using the plasma as source of energy [2] has been diffused enough for offering a clean and efficient process. Within the main industrial applications, we can mention the polymerizing and the hardening of surfaces by nitriding or cementation, superficial coating with titanium nitrate, metallic and ceramic powders sinterization, metallic oxides reduction, etc., become this technology extremely attractive and substituting the conventional thermal heating techniques.

The aim of three-phase PWM power supply described in this paper is to furnish the high voltages and currents to produce the plasma in a medium power ion nitriding reactor. Since the plasma presents an unstable physical state, it is necessary to perform the constant monitoring operational conditions in order to guarantee its maintenance. This requires the permanent adjustment of the power supply electrical parameters in function of the pressure, temperature and current conditions that exist in the nitriding chamber. In order to minimize the plasma discharge instability in the nitriding chamber, high voltage pulses are applied instead of a continuous DC high voltage [3]. With this artifact, the possibilities of electrical arcs surge in holes, tips and edges due to accumulation of static charges in the pieces to be treated are largely reduced.
The figure 1 illustrates the block diagram of a plasma ion nitriding reactor and the associated three-phase PWM power supply.

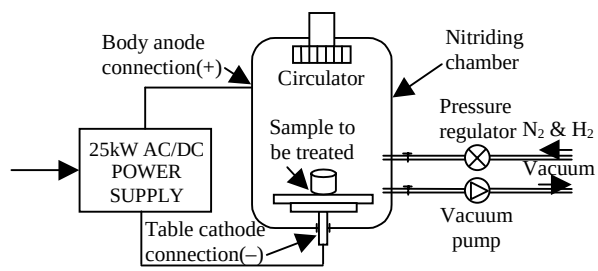

Fig. 1 - Ilustrative block diagram of the nitriding reactor and associated PWM power supply

After experimental and characterization phase in our University laboratory (UFRN/LECA), this three-phase PWM power supply will be installed in a textile industry of our state, Rio Grande do Norte (RN). The focus given in this paper is mainly descriptive to facilitate the understanding of the global system and architecture adopted in the project development and construction of the three-phase PWM power supply. The design details of the main elements, components, circuits and control strategy will be presented at the final of the paper.

II. THREE PHASE PWM POWER SUPPLY PROJECT DESCRIPTION

The definition of the project and the implementation scheme for a 25 kW three-phase PWM power supply and associated subsystems attend the following criteria's:

a) The galvanic isolation between the primary line and the secondary circuitry in order to eliminate the leakage possibilities to produce electrocution of the operator;

b) The continuous and automatic adjustment of the power factor near to the unity value and the maintenance of the harmonic current level within the limits allowed by the Brazilian electrical standard;

c) The possibility to adjust and control the electrical parameters in stand alone mode;

d) The automatic protection and alarm system for all main power circuits, ion nitriding reactor, vacuum pump and associated equipments with the visual and sound warning anomalies;

e) The detection and automatic suppression of voltaic arcs inside the ion nitriding chamber;

f) The acceptance of remote programming through the RS-232 serial port for industrial treatment process control by means of an auxiliary PC microcomputer;

g) To offer good mechanical modularity in a way to permit fast intervention and maintenance "in situ" as well as to facilitate the future system evolution.

With regards to initial requirements, the more suitable topology for the three-phase PWM power supply project was defined [4], [5], giving special attention to configuration choice and the design of the power factor preregulator, boost rectifier and chopper.

The figure 2 presents the simplified block diagram of the three-phase PWM power supply and its associated subsystems.

An insulated transformer is used at the input converter to attend the required galvanic isolation between the primary electrical line and the DC output of the PWM power supply. This 30 kVA three-phase transformer was built locally and it has a winding relationship of 1:1 with the primary connected in a delta and the secondary in a wye connection. This connection scheme allows the free circulation of the third harmonic caused by the magnetizing currents in the primary phases and provides a neutral reference point at the secondary windings for internal connection circuits. Each column behaves as an independent single-phase transformer facilitating this way the power factor correction of the group. The nominal input line voltage is 220Vac and 380Vac at the secondary windings transformer.

The three-phase 50A low-pass filter is inserted in series with the three secondary windings in order to reduce the injection of high frequency harmonic currents and transients caused by the IGBT's three-phase bridge rectifier switching at 15 kHz operation frequency.

The absorbed phase currents are measured by three magneto-resistive hall sensors inserted in serie with each branch of the secondary windings of the transformer. After having rectified, amplified and processed current samples are used to perform the power factor correction of the three-phase PWM power supply. In addition, these current samples are used for the current protection circuits and subsystem units. The voltage samples of the secondary windings are obtained by means of the three auxiliary small transformers.

The energy storage is provided by three booster inductors [6] built on ferrite core with double-wire windings in order to minimize the losses due to skin effect at operation frequency.

The rectifier is constituted by an IGBT's three-phase bridge 75A/1700V industrial module including internally the anti-parallel diodes.

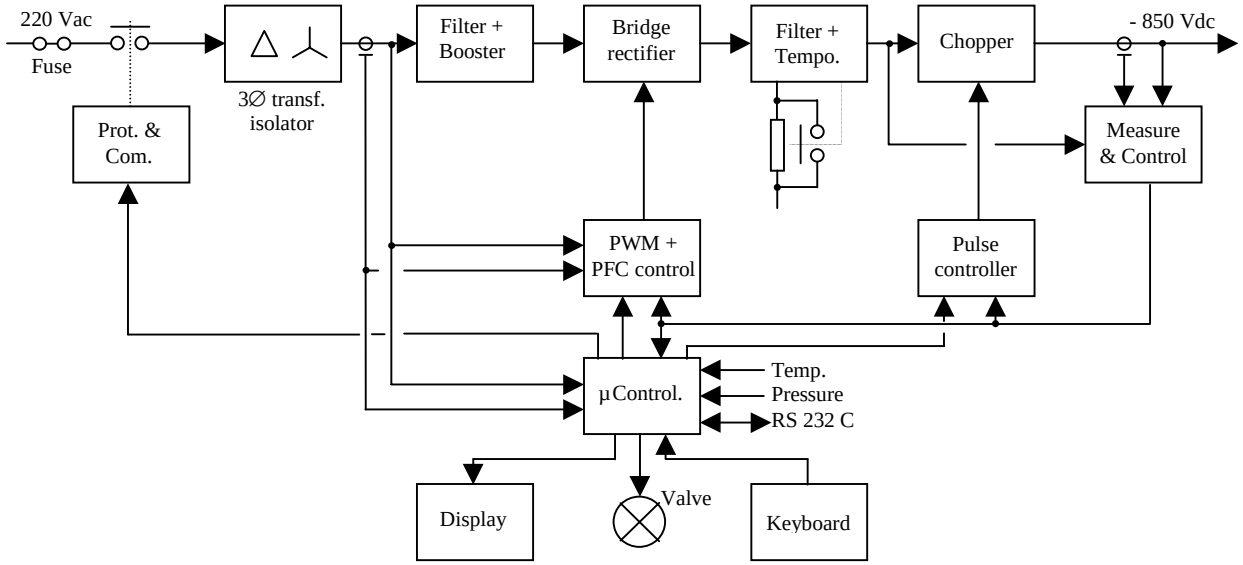

Fig. 2 - Simplified block diagram of the PWM power supply and associated subsystems

These devices are mounted on an aluminum heatsink with forced air cooling. Three driver modules are used for driving the IGBT's pairs and are mounted on the heatsink block. These driver modules perform the interface and drive to the IGBT's and provide the necessary isolation between the command and power circuits. These modules also incorporate the several current protection circuits for the IGBT's bridge rectifier. The PWM boost rectifier permits a continuous adjustment of the DC output voltage from -700V up to -1.000V with compensation margin enough to accommodate a ±15% variation line voltage. Since it operates exclusively resistive loads with not having possibility of reverse power flow from the load to the source a DC rail diode was included in the DC bus of the power supply [7]. The use of this DC rail diode allows to simplify the control strategy scheme of the rectifier and to eliminate any possibilities of the IGBT's bridge short-through. A 200A/1600V ultra fast recovery diode is used for the application. This diode is mounted also on the main heatsink of the three-phase rectifier module.

The figure 3 shows the simplified electrical diagram of the boost rectifier, DC rail diode and chopper of the three-phase PWM power supply.

The PWM and control unit is built on three high power factor preregulator dedicated devices UC3854. These integrated circuits and associated circuitry generates the PWM complementary pulses to command the IGBT's bridge rectifier. By comparison of the current and voltage samples the necessary corrections is introduced to maintain the power factor of each phase near to the unity and reduced, this way, the injection of harmonic currents in the line [8]. It also executes, by means of the received information of the main controller unit, the adjustment of the pulse width in a way to maintain the output voltage at scheduled level and compensate variations of the electrical lines or load. Additionally, it implements the current and voltage protection functions, disabling or limiting the PWM applied to the IGBT's bridge rectifier. The DC voltage obtained at output filter is stored by a 2.200uF/1.350Vdc bank of electrolytic capacitors sized to supply the current picks required by the load. During the initial power rise and stabilization phase of the three-phase PWM power supply the charge of the capacitors bank is limited by a 5Ω/500W power resistor. After some seconds delay, this resistor is short-through by a contactor and the nominal tension of the bridge rectifier is applied to capacitors.

The chopper function is implemented by a 200A/1700V IGBT switch module. Under command and control of the pulse generator unit, this switch provide the transfer of the DC voltage existing on the capacitors bank to output of the three-phase PWM power supply. This IGBT module is mounted on an aluminum heatsink that is cooled with forced air and incorporates a driver module. This driver module performs the IGBT interface and drive and it provides the necessary isolation with the pulse generator unit.

The pulse generator unit, under command of the main controller unit, produces the stream pulses necessary to drive the chopper. These pulses have its frequency and duty cycle determined by the main controller unit by means of keypad programming, in stand alone mode, or by the external PC microcomputer, in slave mode. The chopper frequency is programmable between 100 Hz and 10 kHz with a duty cycle of 10% to 100%. It is, also, responsible for the IGBT switch turn-off in case of voltaic arcs surge in the nitriding chamber or short-through on the output of the power supply. It also generates the alarms for indication in the display.

The protection and command unit implements the functional powering sequence of the three-phase PWM power supply and the temporization of its several circuits. The power segment this unit is constituted essentially by the eletro-mechanicals contactors. It implements, also, the general protection of the three-phase PWM power supply by means of a direct action on the main disjunctor. Fuses in the primary line complements the protection of the system. The several current, voltage, temperature and pressure sensor elements acts directly at level of its respective units. The voltaic arc protection is implemented by detection of an overload current rising in the nitriding chamber by means of hall current sensor. This protection act on the pulse generator unit.

The functional programming parameters, management functions and protection activation are executed by the main controller unit. This module is based on a 16 bit microcontroller board used for industrial automation application. Using a 68C16 microcontroller, this module contain a great quantity of memory for programming and it offers the 10 bit A/D input ports, 12 bit D/A input ports, I/O ports and RS-232/RS-485 serial ports as well as provision for keypad and liquid crystal display. It offers, also, a specific port for the debug programs.

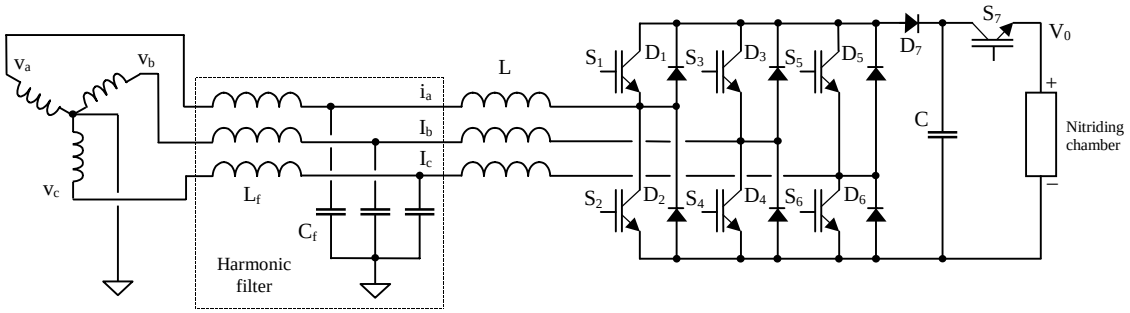

Fig. 3 - Simplified electric diagram of the boost rectifier and associated chopper

The microcontroller is programmed in C-language, using the predefined functions. The use of this unit allows to operate the three-phase PWM power supply in the stand alone mode or in the slave mode by means of an external PC microcomputer, through the RS-232 serial port.
The three phase PWM power supply is conditioned in two 36U standard racks with several shielding plates in order to minimize the EMI due to high power management. Each module unit is enclosed in a 19" standard drawer and uses the shielded cables to interconnect the units.

III. HIGH POWER FACTOR PREREGULATOR TOPOLOGY

An average current mode scheme is used to control the line currents. The advantages of this control scheme include constant switching frequency, improved noise immunity and thrue average current control. Three UC 3854 PFC dedicated integrated circuits are used to implement this function in each one of the line currents of the three-phase PWM power supply [9] [10] [11]. This integrated circuit incorporates the analog multiplier, references, comparators, fixed-frequency PWM and several amplifiers to implement all the control functions necessary to built a power supply capable of optimally using available power line current while minimizing line current distortion. The PWM operates at nominal frequency of 15 kHz and the three devices are synchronized to avoid harmonic beatings between phases. Additional circuitry generates the complementary signals for drive the IGBT's bridge. The IGBT's are controlled using a pulse width modulation control scheme and force the line current to be controlled as required according to a sinusoidal modulation law.
The figure 4 shows the simplified block diagram of the high power factor preregulator control circuit used in each phase of the three-phase PWM power supply.

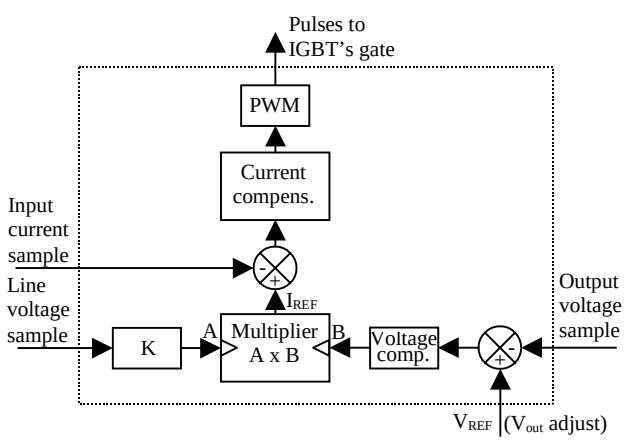

Fig. 4 – The simplified block diagram of the power factor preregulator circuit

IV. VOLTAGE COMPENSATOR PROJECT

The power circuit to be controlled consists basically a three-phase PWM boost rectifier as shown the figure 3. The system output is the voltage V_0 on the load R_L; this should be controlled through an IGBT's three-phase bridge rectifier. For modeling this system it was defined as state variables the inductor current ($x_1 = i_L$) and the capacitor voltage ($x_2 = v_C$). The description of variables [12] [13] for the system of having been is accomplished starting from the equations (1) and (2),

$$\begin{bmatrix} \dot{x}_1 \\ \dot{x}_2 \end{bmatrix} = A_n \cdot \begin{bmatrix} x_1 \\ x_2 \end{bmatrix} + B_n \cdot V_E \tag{1}$$

$$V_S = C_n \cdot \begin{bmatrix} x_1 \\ x_2 \end{bmatrix} \tag{2}$$

where the index n indicates the relative parameter to the two states of the circuit, "on" for n=1, inductor keeps energy, and "off" for n=2, inductor transfers energy to load, respectively. Considering the capacitor equivalent serie resistance $R_S << R_L$ where R_L is the load resistance. It is obtained the next groups of matrixes (A1, B1 and C1) and (A2, B2 and C2):

$$A_1 = \begin{bmatrix} 0 & 0 \\ 0 & -\dfrac{1}{CR_L} \end{bmatrix};\ B_1 = \begin{bmatrix} \dfrac{1}{L} \\ 0 \end{bmatrix};\ C_1 = \begin{bmatrix} 0 & 1 \end{bmatrix} \tag{3}$$

$$A_2 = \begin{bmatrix} -\dfrac{R_S}{L} & -\dfrac{1}{L} \\ \dfrac{1}{C} & -\dfrac{1}{CR_L} \end{bmatrix};\ B_2 = \begin{bmatrix} \dfrac{1}{L} \\ 0 \end{bmatrix};\ C_2 = \begin{bmatrix} R_S & 1 \end{bmatrix} \tag{4}$$

where C, R_L, R_S and L are capacitor of output filter, load resistance, capacitor equivalent serie resistance and booster inductance, respectively. The components values choose are:

C = 2.200 μF R_L = 30 Ω
R_S = 0.2 Ω L = 2 mH

Starting from these matrixes, it can be obtained the plant transfer function from:

$$\frac{V_O(s)}{d(s)} = C \cdot (sI - A)^{-1} \cdot [(A_1 - A_2) \cdot X + (B_1 - B_2) \cdot V_S] + (C_1 - C_2) \cdot X$$

where $V_0(s)$ it is the output voltage, d(s) it is the average duty cycle of the IGBT's and X it is the medium value of the state vector.
Substituting the terms for the values used in the real plant, it was found the following function of transfer of the system:

$$\frac{V_0(s)}{d(s)} = 2{,}4 \cdot 10^5 \cdot \frac{s + 85}{s^2 + 60 \cdot s + 25.700}, \tag{5}$$

Therefore, a zero in -85 and two poles in –30±j150, approximately. Thus, the system is stable.
With the transfer function and experimental tests were determined the PI controller parameters.

The figure 5 represents the feedback system. The reference value, that is the continuous tension expected for the exit V_0; it is defined inside of the own program that implements the PI controller.

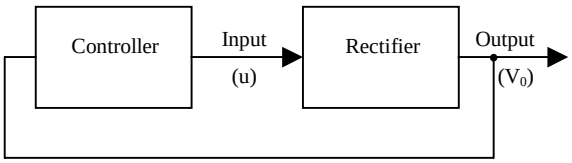

Fig. 5 – System with feedback loop

The input controller is the output voltage switching supply, that it is V_0 over the load, and the output is the signal (u). However, the internal processing of the program that accomplishes the control it has as input variables the difference between the reference and the tension V_0 and derived it of the error, called δ error, defined as the subtracted current error of the previous error.

V. RESULTS

The validity of the implemented topology was verified with aid of several simulations in Pspice software. On figures to proceed, are presented the experimental results obtained in the phase A. The results obtained in the other two phases are identical since of the power factor correction is independent in each one of them.

The figure 6 shows, after normalization of the scales, an overlap of the voltage V_A and current I_A waveforms at the isolation transformer secondary for a 25 kW resistive load. The fast convergence of the current I_A for its regime value is observed after initial powering the PWM rectifier.

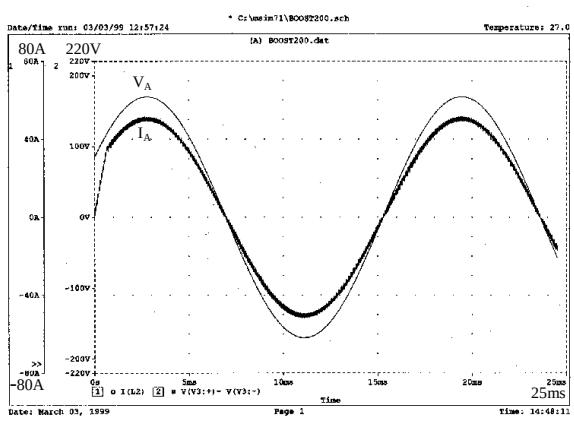

Fig. 6 - Voltage and current waveforms observed in phase A

The figure 7 presents a zoom view of interval near the zero crossing voltagem. We can see the switching effect over the booster inductor current, where the current ripple is approximately 2.5A.

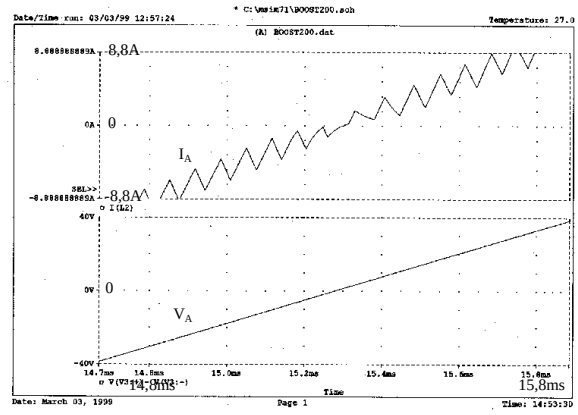

Fig. 7 - Zoom waveform current ripple observed in phase A

In the figure 8 the three phase currents waveforms are shown.

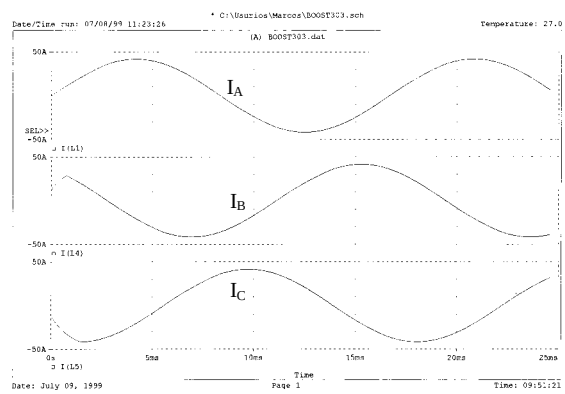

Fig. 8 - The three phase booster inductor current

Finally, the frequency spectrum of a current I_A is shown in the figure 9, with the major power concentrate on 60 Hz fundamental frequency. The existent harmonics line at 7.5, 15 and 30 kHz are due to the noise switching of IGBT's bridge. Calculating the harmonic distortion, starting from the results obtained in the simulations, it is reach a current harmonic distortion factor lower to 0.25% [12].

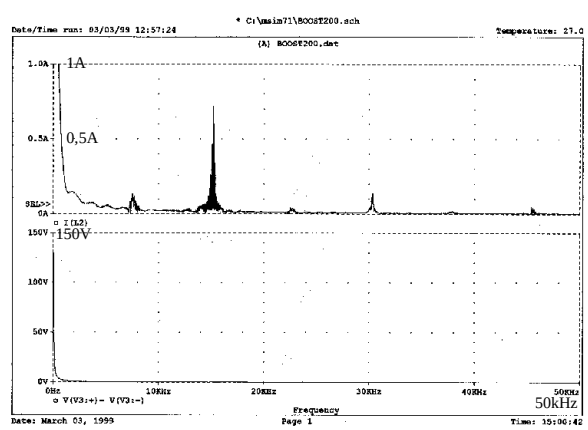

Fig. 9 - The current and voltage spectrum observed in phase A

VI. CONCLUSIONS

It has been evidenced, by the simulation and experimental results obtained the validity of the topology adopted for the project of the three-phase PWM power supply with a power factor near to the unity and a harmonic line current practically worthless. In the posterior stages, the validation tests will be extended and the boost rectifier will be endowed with auxiliary circuits to soft switching the IGBT's in order to reduce the commutation losses. With use of this technique is expected an efficiency gain of 1.5 to 2% at the nominal power.

VII. ACKNOWLEDGEMENTS

The project began in October 1998 and receives financial support of the PADCT/FINEP and CNPq.

VIII. REFERENCES

[1] A. M. F. Guimarães, *Fonte chaveada para alimentação de uma câmara de nitretação iônica. Tese de Mestrado*, Natal-RN, UFRN-CT-DEE.

[2] C.A. dos Santos, *Nitretação iônica*, Natal-RN, UFRN-DFTE.

[3] C. Alves Jr., *Nitretação em plasma pulsado: equipamento, preparação e caracterização das camadas nitretadas. Tese de Doutorado*, Florianópolis-SC, UFSCar.

[4] R. C. Souza and D. S. Simonetti, *Análise de operação de três topologias retificadoras trifásicas com pré-carga de corrente*, Vitória-ES, UFES-DEL-CT.

[5] M. E. Fraser and C. D. Manning, *Four wire power factor corrected boost rectifier*, England, University of Loughborough.

[6] R. Mertens, A. Peytier, K. Hameyer and R. Belmans, *A CAD laboratory in electromagnetics for undergraduates*, Belgium, University of Louvains.

[7] Y. Jiang, H. Mao, F. C. Lee and D. Borojevic, *Simple high performance three phase boost rectifiers*, USA, VEPEC.

[8] L. Malesani and P. Tenti, *Three phase AC/DC PWM to convert with sinusoidal AC current and minimum filter requirements*, Italy, University of Pádua.

[9] J. A. Pomílio, *Pré-reguladores de fator de potência-PFP*, Campinas-SP, UNICAMP-FEE.

[10] J. A. Pomílio, *Harmônicos e fator de potência: um curso de extensão*, Campinas-SP, UNICAMP-FEE.

[11] Unitrode, *UC 3854 High Power Factor Preregulator Data Sheet*, USA.

[12] N. Mohan, T. M. Underland and W. P. Robbins, *Power electronics: converters, applications and design*, USA, John Wiley & Sons.

[13] R. W. Erickson, *Fudamentals of Power Electronics*, USA, Chapman & Hall.