# Induction Generator Based System Providing Regulated Voltage with Constant Frequency

Enes Gonçalves Marra
School of Electrical Engineering - EEE
Federal University of Goiás - UFG
CEP: 74605-220 - Goiânia-GO Brazil
e-mail: enes@dsce.fee.unicamp.br

José Antenor Pomilio
School of Electrical and Computer Engineering - FEEC
State University of Campinas - UNICAMP
CEP: 13081-970 - Campinas-SP Brazil
e-mail: antenor@dsce.fee.unicamp.br

***Abstract* – A PWM voltage-source inverter is used in order to improve the electrical characteristics of an isolated induction generator. The electronic converter allows to achieve a better system behavior in many aspects: voltage regulation, frequency stabilization and reactive power compensation. The PWM inverter DC voltage is the control variable of the generator speed governor, therefore the system power balance and the generator voltage regulation is accomplished by the DC voltage control, which is exerted by the speed governor. Both simulation and experimental results demonstrated the system is stable, robust and an effective source of regulated three-phase voltages.**

## I. Introduction

The aim of this investigation is to propose an induction generator (IG) application as an alternative to wound-rotor synchronous-generators to be employed in low power isolated generation systems, such as portable fuel engine driven generation systems.

It is frequently stated that cage rotor induction machines (IM) are robust, inexpensive compared with DC and wound-rotor synchronous-machines, require little maintenance and have high power-weight ratio (W/kg). Despite these favorable features, IMs are hardly employed as generators due to its unsatisfactory voltage regulation and frequency variation, even when driven under constant speed and feeding loads which consume active power [1,2].

Wound-rotor synchronous-generators are reliable suppliers of regulated three-phase constant frequency voltage, provided the dynamic response of the speed governor is able to maintain constant rotor velocity during the occurrence of load power variations. Nevertheless, they are expensive machines due to the maintenance required by the excitation system, which attains slip rings, brushes and field-current control-circuit. Therefore, a cost effective and technically reliable alternative to wound-rotor synchronous-generators are always welcome.

It was shown that it is possible to accomplish regulated three-phase voltage with constant frequency from the association of a three-phase induction generator with a three-phase voltage fed PWM inverter [3,4]. Under uncontrolled speed conditions, all the electric power produced by the IG has to be properly consumed. This paper presents the study of a system in which the IG is driven by a speed regulated prime mover, so that it is possible to adjust the input power in order to generate exactly the active power required by the load.

In this scheme, the generator is driven by a speed regulated prime mover. Furthermore, the system is intended to be a source of regulated voltage with constant frequency, whose energy quality is good enough to feed sensitive loads, such as microprocessor controlled ones.

## II. Isolated Capacitor-Excited Induction Generator System

Fig. 1 presents a system in which a capacitor-excited induction generator operates isolated from the utility grid. In this circumstances, the active power of the AC load affects considerably the amplitude and the frequency of the voltage at the stator terminals of the generator.

In this case, the frequency of the voltage at the stator terminals is not constant, even if the rotor speed is kept constant by the action of a speed governor.

Assuming that the mechanical, electrical and magnetic losses are of secondary importance, the electric power ($P_e$) converted by the generator is given by the product between the rotor speed ($\omega_r$) and the generator torque ($T_m$).

$$P_e = \omega_r T_m \tag{1}$$

Supposing the rotor speed is invariable, an increase in the active power required by the AC load yields a drop in the stator frequency, as it is the only possible way the IG can raise its rotor slip frequency and consequently elevate the torque, so that it is able to match the load power demand.

Fig. 2 illustrates qualitatively a situation in which the induction generator was feeding an unitary power-factor load. Point 'A' is the stable steady-state operation point that satisfies (1). The synchronous frequency ($f_s$) of the stator magnetomotive force (MMF) is equal to $f_{s1}$ in point 'A'.

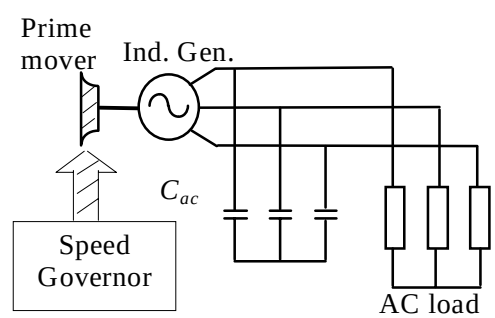


Fig. 1. Capacitor-excited IG system, isolated from the utility grid.

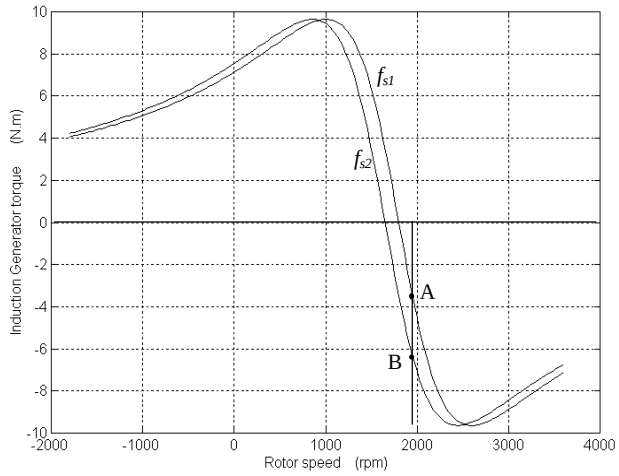

Fig. 2. Torque-speed characteristic of the induction generator.

The point 'A' in the IG torque characteristic (fig. 2) corresponds to an equivalent steady-state point 'A' in the generator magnetization characteristic, as shown in fig. 3.

When the active power required by the AC load increases, the synchronous frequency decreases from $f_{s1}$ to $f_{s2}$, producing a torque increment to match the higher power demand. Thus the new stable steady-state operation point is steered to point 'B'. Notice that the speed governor is supposed to maintain the rotor speed constant.

The frequency drop to $f_{s2}$ reduces the magnetization-characteristic voltage ($V_g$) in the same proportion, assuming that the air-gap flux is kept constant, i.e. $V_g/f_s$ is constant.

In addition to the change in the magnetization characteristic, the frequency reduction affects the capacitive reactance of the excitation bank ($X_c$). $X_{c1}$ and $X_{c2}$ are the capacitive reactance correspondent to the frequencies $f_{s1}$ and $f_{s2}$, respectively.

$$X_c = \frac{1}{2\pi f_s C_{ac}} \tag{2}$$

Altogether, the resulting effect of increasing the AC load active power is an IG terminal-voltage reduction, due

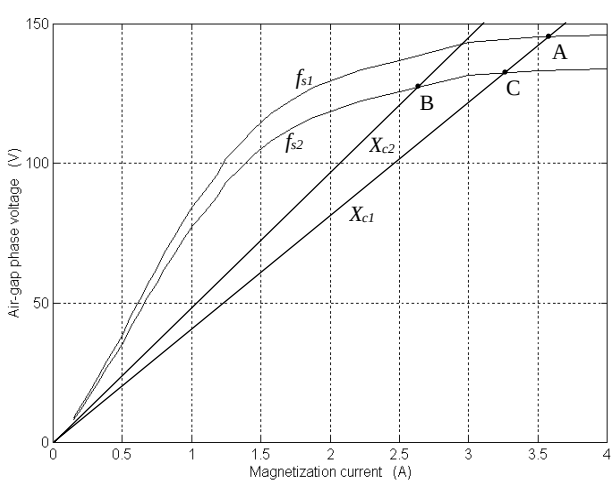

Fig. 3. Magnetization characteristic of the induction generator.

to the changes in the magnetization characteristic and in the excitation bank capacitive reactance.

The $C_{ac}$ capacitance could be increased, in order to recover the capacitive reactance $X_{c1}$. In this case, the slope of the capacitor-bank voltage characteristic will return to its previous value, however the steady-state operation point in the magnetization characteristic will be 'C' instead of 'A', as the frequency remains $f_{s2}$. The new operation point at the torque characteristic (fig. 2) would depend on the behavior of the AC load under voltage variations.

It should be highlighted that the voltage drops at the stator and rotor resistance and leakage reactances are not the main cause of the poor voltage and frequency regulation in the isolated IG. The fundamental factor that affects the voltage regulation is the influence of the frequency on the generator magnetization characteristic.

Remark that the voltage and frequency variations presented previously were caused by increments made exclusively in the active power.

In case the inductive reactive power increases, the voltage reduction would be even higher, due to the demand of capacitive reactive power from the excitation bank to compensate for that.

Reductions at the rotor speed as a result of torque elevations, due to a non-regulated shaft speed, would degenerate voltage and frequency even more.

Substantial effort has been made to overcome the poor voltage regulation of the isolated induction generator under load active and reactive power variations [5]. These efforts have been concentrated on different types of voltage regulators acting as Volt-Ampere-reactive controllers, based on series-shunt capacitor compounds [1,5-8], switched capacitor [9-11], variable inductor [12], or saturated reactor [13,14]. Such approaches rely on contactors, relays or semiconductor switches.

Although the methodologies mentioned before attain valuable improvement in voltage regulation, they have solved the problem only partially, as the frequency is yet variable. Besides that, the generator still experiences variation in its magnetization characteristic with the frequency, which leads to the requirement of a wide range of capacitance values at the excitation bank. Yet an excessive increase in the $C_{ac}$ capacitance would deeply saturate the generator, leading to voltage waveform distortions.

This analysis leads to the conception of a strategy which maintains constant frequency at the IG stator terminals and, simultaneously, guarantees reactive power both to magnetize the generator and to compensate for the AC load demand.

The constant-frequency approach ensures that the steady-state operation of the IG will take place following only one torque and magnetizing characteristic-curves, both regarding the constant stator synchronous frequency.

A generation system based on this *modus operandi* has to comprise three indispensable parts, namely the induction generator itself, the speed governor, and a device

which fixes the frequency, magnetizes the generator and compensate for the AC load reactive power requisites.

It is important to mention that a constant frequency system like this, is suitable to work driven by energy sources which allow reasonable achievement of the speed control, like fuel engine plants. Therefore, this approach is not adequate for systems where the speed variation is the basis to achieve profitable energy conversion, such as wind systems.

## III. System Description

The proposed system is inherently composed of an induction generator excited by a three-phase capacitor bank ($C_{ac}$) and connected to the AC side of a voltage-fed PWM inverter through series inductances ($L_f$). The rotor shaft speed is controlled by a speed governor. Fig. 4 presents the proposed IG system configuration.

The main goal of this structure is to feed the AC loads with satisfactory energy quality, which stands for providing three-phase balanced voltages, with constant frequency, sinusoidal waveform and regulated amplitude.

The system is isolated from grid and the starting is accomplished from the self-excitation produced by the interaction between the residual flux voltage and the AC capacitive bank ($C_{ac}$).

After start-up, the IG provides the energy required to charge $C_{dc}$ and to supply the losses. The PWM inverter control-circuit is also fed by $C_{dc}$, by means of a forward DC-DC converter.

The fundamental frequency of the PWM inverter output voltage is maintained constant at 60Hz, yielding a constant frequency busbar at the IG leads.

The IG terminal voltage waveform is sinusoidal due to the action of the $L_fC_{ac}$ filter, which attenuates the high frequency voltage components. The selection criteria of $L_f$ and $C_{ac}$ is explained in [3-4].

The speed governor role is to set rotor speed so that the IG produces enough power to supply the AC loads, the system losses and the PWM inverter control circuits, as well as to keep $C_{dc}$ properly charged.

In this system, the rotor speed is variable and has to be set to match the IG power requirements, conversely to

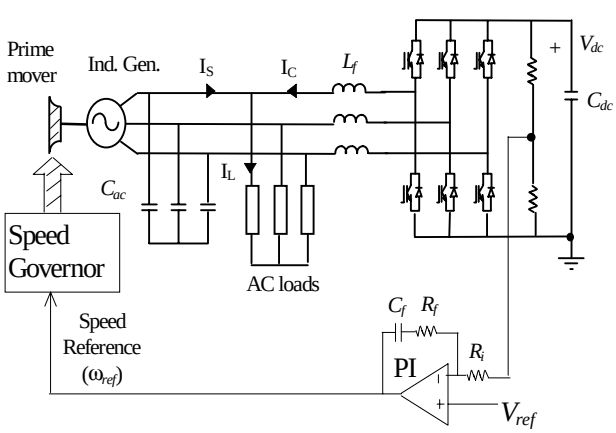


Fig. 4. IG based system configuration.

wound-rotor synchronous-generator systems where the rotor speed is kept constant. Consequently, the governor speed reference value ($\omega_{ref}$) is not constant.

In case the electric power produced by the IG is not enough to match the consumed power, the PWM inverter DC link capacitor ($C_{dc}$) is the only possible source from where the AC loads can take power.

The consumption of energy stored in $C_{dc}$ would produce a decrease in the DC link voltage ($V_{dc}$) up to the system collapse. Similarly, any exceeding power would be stored in $C_{dc}$, in case the IG produced more power than that consumed.

$V_{dc}$ is a suitable parameter to indicate the system power balance. Consequently, $V_{dc}$ can be employed as the control variable of the speed governor. Thus the speed governor control operates to maintain $V_{dc}$ tracking a reference value.

Assuming the synchronous frequency at the induction generator stator is kept constant by the PWM inverter action, the speed governor affects the $V_{dc}$ voltage amplitude as well as the generator terminal voltage at the proposed system (fig. 4). Conversely, the speed governor influences the frequency in synchronous generator systems.

As $C_{dc}$ acts as a voltage source to the PWM inverter, a good voltage regulation is obtained at the IG leads by keeping $V_{dc}$ invariable, since the only difference between the voltages at the IG and at the PWM inverter AC terminals is the voltage drop at the series inductance ($L_f$).

Provided $L_f$ is assessed to filter voltage components at the switching frequency and higher frequencies, the voltage drop at 60 Hz is quite small. Hence, a good voltage regulation and the system power balance are both achieved when the speed governor maintains constant $V_{dc}$.

Considering the PWM inverter allows bi-directional power flow, the capability to compensate for reactive power is a natural consequence of the system configuration and operation mode. Therefore, when $V_{dc}$ is kept constant, the generator voltage is regulated, even when feeding dominantly reactive loads.

The energy stored in $C_{dc}$ is vital to improve the system's capability to support extreme transient conditions, such as induction motor start-ups and high power load steps. As a result, the system's transient behavior becomes more robust if $C_{dc}$ is suitably rated.

## IV. Simulation and Experimental Results

The system simulation presented in fig. 4 was carried out in PSpice® using a ½hp IM, whose parameters are shown in Table I, as generator. The induction machine was represented by its $\alpha\beta\gamma$ model as described in [15,16]. Moreover, the PWM inverter switching frequency was 5kHz, $C_{ac}$=37uF, $C_{dc}$=6000uF, $L_f$=5mH.

The PI-controller proportional constant was set to 0.5, the integral constant to 20 ($R_i$ = 50 kΩ; $R_f$ = 25 kΩ and $C_f$ = 100 nF, in fig. 4), and the $V_{cc}$ reference ($V_{ref}$) was set to 325V.

The prime mover torque was represented by a controlled current-source in an equivalent electric circuit whose mathematical model is analog to the dynamic equations of the mechanical system.

Fig. 5 shows the dynamic behavior of $V_{dc}$, the AC load line current and the IG terminal line voltage during resistive load transients of 50% of the IG rated power. The AC load was connected to the generator leads at 200 ms, remaining for 250 ms before disconnection.

After the resistive load connection, $V_{dc}$ decreases, returning to its earlier value, five cycles later. The AC load disconnection initially caused an increase in $V_{dc}$, which recovers its prior value during the subsequent five cycles. During both connection and disconnection transients, the $V_{dc}$ control revealed to be able to maintain the system power balance and the IG terminal voltage.

A 50 hp induction generator based system was also simulated, in order to probe the system feasibility. The cage-rotor induction machine parameters referred to the stator are presented in table II [17]. Moreover, The system was simulated using proportional constant equal to 0.5 and integral constant equal to 200 ($R_i$ = 50 kΩ; $R_f$ = 25 kΩ and $C_f$ = 100 nF, in fig. 4), the inverter switching frequency was 5 kHz, $L_f$ = 1 mH, $C_{ac}$ = 190 μF and $C_{dc}$ = 100 mF. The DC link reference voltage ($V_{ref}$) was set to 650V.

Fig. 6 presents the AC voltage at the IG terminals, the rotor speed in rad/s and the AC-load line current obtained from the AC-load transient-connection simulation.

After the start-up process and an interval running under no-load, the system was submitted to an AC-load step at 800 ms. The load was composed of a Y-connected resistance bank, rating at about 40 % of the generator rated power. The load was kept connected up to 1.5 s, and afterwards the system returned to the previous no-load condition. It was verified that the system was able to maintain the generator terminal voltage during a severe load transient. The closed-loop speed control acted in order to adjust the rotor speed so that the generator could suit the AC load power requirements.

As the prime mover is not able to produce negative torque to brake the rotor, a DC-link resistance was employed to avoid overvoltages during the occurrence of disconnection of AC-loads rated at significant power values, similarly to what is done in motor drives.

A 5 ohm resistance was then set to be switched on when the DC voltage exceeds 670 V and, once connected, to be switched off when the DC voltage returns to 650 V. Since the purpose of the DC-link resistance is to avoid overvoltages under transient episodes, this does not operate under normal circumstances, when the non-dissipative speed control is intended to maintain constant DC voltage.

It was observed that the system simulation demanded a long computation time due to the concurrent high switching frequency (5 kHz) and mechanical time constants involved.

The ½hp IG based system was set up experimentally, employing the same parameters in table I, and those used for simulation. A DC motor, which was driven by a controlled rectifier, was employed as the system prime mover.

Fig. 7 shows the IG and the PWM inverter terminal line voltages in steady state. Observe that the $L_fC_{ac}$ filter was effective in preventing from the presence of high frequency components in the IG line voltage.

TABLE I
½ HP IM PARAMETERS REFERRED TO THE STATOR (60 HZ)

| | |
|---|---|
| Stator resistance ($r_S$) | 4.4 Ω |
| Rotor resistance ($r_r$) | 5.02 Ω |
| Leakage stator reactance ($X_S$), ($2\pi.60.L_{ls}$) | 5.9 Ω |
| Leakage rotor reactance ($X_r$), ($2\pi.60.L_{lr}$) | 5.9 Ω |
| Linkage reactance ($X_m$), ($2\pi.60.M$) | 70.53 Ω |
| rpm | 1720 |
| Rotor inertia (J) | 0.0006 kg.m$^2$ |

TABLE II
50 HP IM PARAMETERS REFERRED TO THE STATOR (60 HZ)

| | |
|---|---|
| Stator resistance ($r_S$) | 0.13 Ω |
| Rotor resistance ($r_r$) | 0.076 Ω |
| Leakage stator reactance ($X_S$), ($2\pi.60.L_{ls}$) | 0.441 Ω |
| Leakage rotor reactance ($X_r$), ($2\pi.60.L_{lr}$) | 0.662 Ω |
| Linkage reactance ($X_m$), ($2\pi.60.M$) | 13.9 Ω |
| rpm | 1770 |
| Rotor inertia (J) | 0.326 kg.m$^2$ |

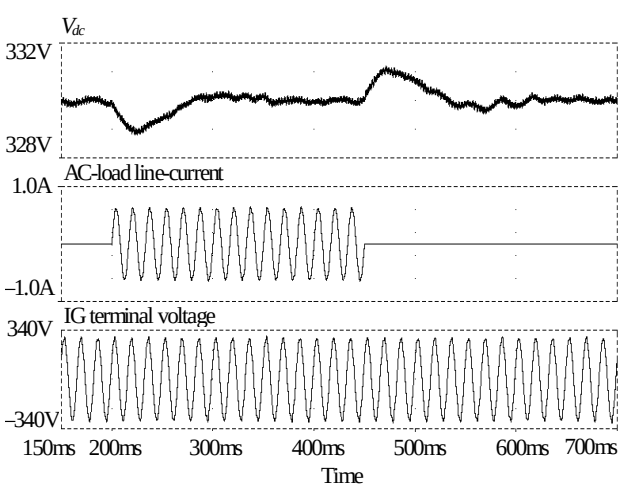

Fig. 5. Simulation results, during resistive AC load transients (½ hp IM).

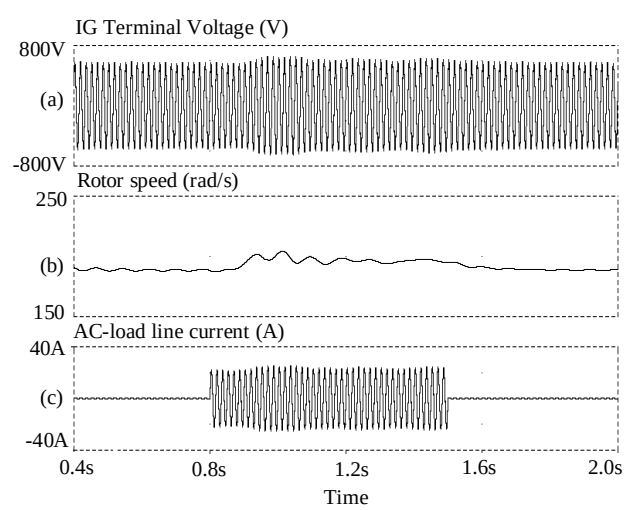

Fig. 6. Simulation results, during resistive AC load transients (50 hp IM).

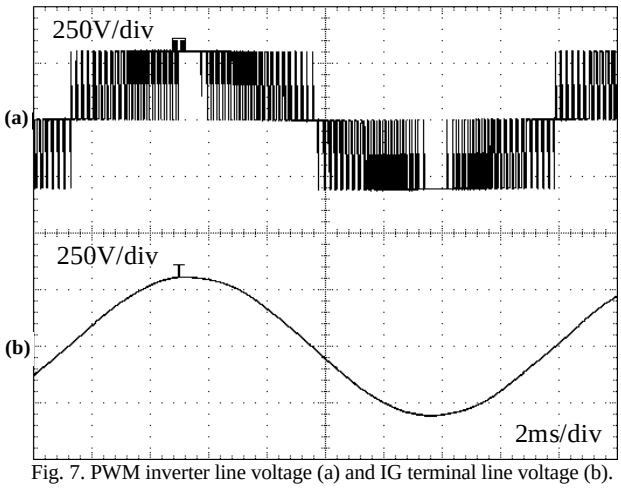

Fig. 7. PWM inverter line voltage (a) and IG terminal line voltage (b).

The variation of the IG rotor speed with the AC load active power is indicated in fig. 8. Notice that the speed governor raises the rotor speed, as the AC load power increases, causing an augment in the rotor slip frequency, so that more power is produced by the IG to match the AC load demand.

A load transient comprising a sequence of two connections, varying the AC load from zero to 70% of the rated power, is shown in fig. 9.

The dynamic behavior of the speed controller demonstrated to be stable and effective during severe load step transients, as it was able to recover the original voltage amplitude.

Three-phase groups of delta-connected light bulbs were used as AC load. Hence the occurrence of current spikes, due to the thermal inertia of the filament, can be noticed at the switch-in events in fig. 9.

No significant overshoot or voltage sag was noticed during the transient occurrence, as well as no permanent voltage drop was detected in the following steady-state period.

The start-up of an induction machine, rated at 70% of the IG power, and directly connected to the IG leads is indicated in fig. 10. During the motor starting, part of the energy stored in $C_{dc}$ is employed in the acceleration. This causes a voltage sag which is subsequently eliminated by the speed controller action ($V_{dc}$ control).

The maximum voltage sag allowed at the AC loads should be a decisive guideline to assess the rated value of the $C_{dc}$ capacitance.

The PWM inverter capability to compensate for the AC load reactive power requisites is evidenced by the record of the line currents at the PWM inverter and at the induction motor, presented in fig. 11.

These currents were registered during the induction motor disconnection. The motor was operating without mechanical load at its shaft, leading to a strongly inductive line-current profile.

Fig. 11 presents the line currents at the converter ($I_C$), at the induction motor ($I_L$) and the resulting current from the association of the IG with the excitation capacitor bank ($I_S$), whose adopted positive directions are those presented in fig. 4.

The $I_S$ current comprises the switching frequency component and the components relative to the active power consumed by the load and the PWM converter (losses). After the IM disconnection, the current component relative to the motor losses is extinguished.

The IM magnetization current is provided by the PWM inverter, as the converter line-current ($I_C$) decays with the

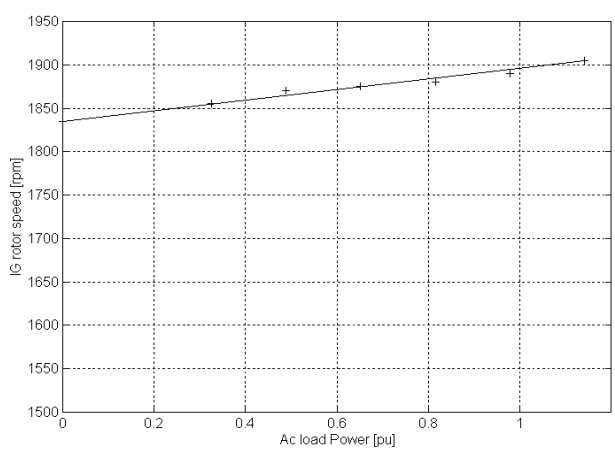

Fig. 8. Experimental relation between the IG rotor speed (rpm) and the AC load power (pu).

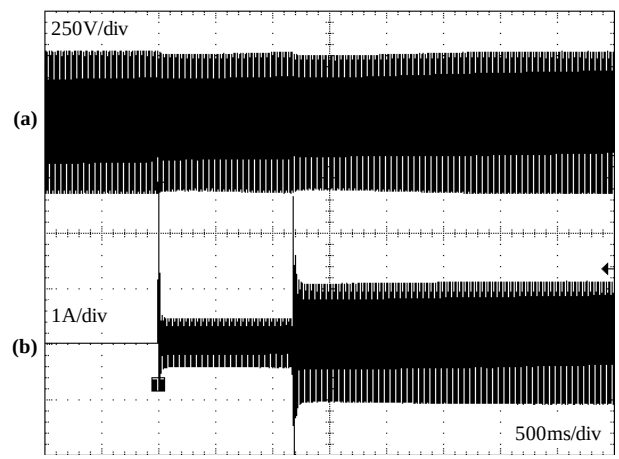

Fig. 9. IG terminal line voltage (a) and AC load line current (b), during the AC load transients.

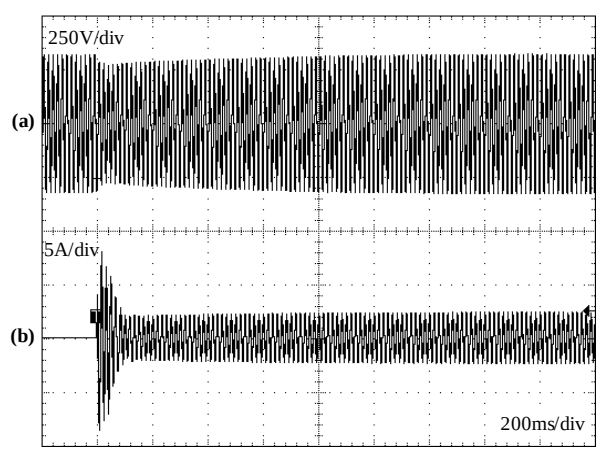

Fig. 10. IG terminal line voltage (a) and induction motor line current (b), during the motor starting.

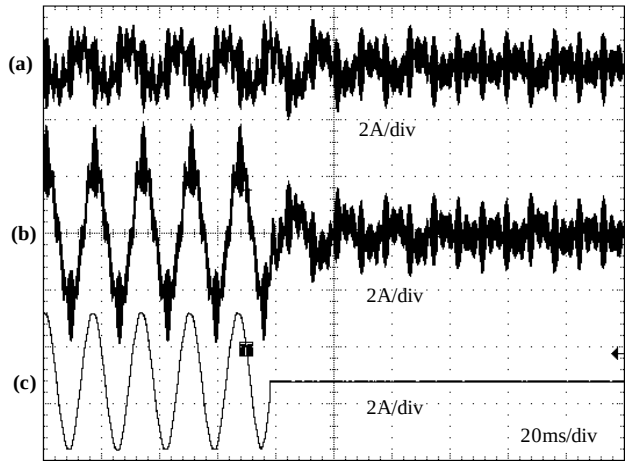

Fig. 11. Line current from the IG ($I_S$) (a), PWM inverter line current ($I_C$) (b) and induction motor line current ($I_L$) (c), during the motor disconnection.

disconnection of the motor (fig. 11), which was the only AC load fed by the system.

The system's voltage regulation demonstrated to be satisfactory, as the steady-state values of the IG terminal voltage varied from 226V to 224V, when the AC resistive load power varied from no-load to the rated power.

The IG voltage could even be made constant if an AC voltage feedback was used to compensate the voltage drop in $L_f$, by changing the modulation index of the PWM signal.

Other alternative to maintain constant voltage at the generator leads would be to sample the voltage at the IG terminals, by means of a low-power rectifier, and use this sampled voltage as the system's controlled parameter.

## V. Conclusion

The paper contributes in proposing a constant-frequency operation mode for isolated, speed-regulated, induction generator systems, as an approach to improve its voltage and frequency regulation. The adopted methodology is nowadays feasible and cost-effective due to the outstanding evolution experienced by power semiconductor devices and power converter technology.

The proposed strategy is intended to be applied in generation systems whose primary energy source is compatible with the rotor shaft speed control, such as portable fuel engine driven generation systems.

The PWM inverter guarantees constant frequency at the IG leads and compensates for the AC load reactive power requisites.

The PWM inverter DC voltage control, which is exerted by the speed governor, testified to be an effective, fast and reliable technique to obtain power balance for the system and to regulate the amplitude of the IG terminal voltage.

Moreover, the $C_{dc}$ capacitor at the PWM inverter is a fast-recovery energy storage device, which improves the robustness of the IG system to support severe transients, such as induction motor start-ups. Other energy storage means, such as freewheel, can also be employed, in order to reduce $C_{dc}$ capacitance, in case it is cost-effective.

The system is able to supply resistive and inductive loads with regulated voltage, constant frequency and satisfactory energy quality.

The IG robustness and simplicity associated with a general purpose PWM inverter are features of the system that can bring cost advantages as opposed to low power wound-rotor synchronous-machine based systems.

The system also confirmed to be robust and stable when submitted to sequential AC load steps as well as during the induction motor starting.

## Acknowledgment

The authors would like to thank the financial support of FAPESP, CAPES, CNPq, FAEP/UNICAMP and FUNAPE/UFG.

## References

[1] D. E. Bassett and M. F. Potter, "Capacitive excitation for induction generators," *AIEE Transactions*, Vol. 54, pp. 540-543, 1935.

[2] C. F. Wagner, "Self-excitation of induction motors," *AIEE Transactions*, Vol. 58, pp. 47-51, Feb. 1939.

[3] E. G. Marra and J. A. Pomilio, "Self-excited induction generator controlled by a VS-PWM bi-directional converter for rural applications," *Proceedings of APEC'98*, pp. 116-122, Anaheim, USA, Feb. 1998.

[4] E. G. Marra and J. A. Pomilio, "Self-Excited induction generator controlled by a VS-PWM converter providing high power-factor current to a single-phase grid," *Proceedings of IECON'98*, Aachen, Germany, pp. 703-708, Aug. 1998.

[5] L. Wang and S. Jina-Yi, "Effects of long-shunt and short-shunt connections on voltage variations of a self-excited induction generator," *IEEE Transactions on Energy Conversion*, Vol. 12, No. 4, pp. 368-374, Dec. 1997.

[6] T. F. Chan, "Analysis of self-excited induction generators using an iterative method," *IEEE Transactions on Energy Conversion*, Vol. 10, No. 3, pp. 502-507, Sept. 1995.

[7] T. F. Chan, "Steady-state analysis of self-excited induction generators," *IEEE Transactions on Energy Conversion*, Vol. 9, No. 2, pp. 288-296, Jun. 1994.

[8] E. Bim, J. Szajner, Y. Burian "Voltage compensation of an induction Generator with long-shunt connection," *IEEE Transactions on Energy Conversion*, Vol. 4, No. 3, pp. 526-530, Sept. 1989.

[9] T. F. Chan, "Capacitance requirements of self-excited induction generators," *IEEE Transactions on Energy Conversion*, Vol. 8, No. 2, pp. 304-311, Jun. 1993.

[10] N. H. Malik and A. A. Mazi, "Capacitive requirements for isolated self-excited induction generators," *IEEE Transactions on Energy Conversion*, Vol. EC-2, No. 1, pp. 62-69, Mar, 1987.

[11] N. H. Malik and S. E. Haque, "Steady-state analysis and performance of an isolated self-excited induction generator," *IEEE Transactions on Energy Conversion*, Vol. EC-1, No. 3, pp. 134-140, Sept. 1986.

[12] M. B. Brennen. and A. Abbondanti, "Static exciters for induction generators," *IEEE Transactions on Industry Applications*, Vol. 13, No. 5, pp. 422-428, Sept. 1977.

[13] S. M. Alghuwainem, "Steady-state analysis of a self-excited induction generator self-regulated by a shunt saturable reactor," *IEEE International Electrical Machines and Drives Conference Record (IEMDC'97)*, pp. MB1-10.1-MB1-10.3, Milwaukee, USA, May 1997.

[14] B. C. Doxey, "Theory and applications of capacitors excited induction generators." *The Engineer*, Vol. 216, pp. 893-897, Nov. 1963.

[15] R. Szcesny and M. A. Ronkowski, "New equivalent circuit approach to simulation of converter - induction machine associations," *Proc. of the European Conf. on Power Elec. and Applic. (EPE'91)*, pp. 4/356-4/361, Firenze, Italy, 1991.

[16] R. M. M. Martinez, *A Contribution to the Study and Design of a Three-Level Voltage Source Three-Phase Inverter* (in Portuguese), M.Sc. Dissertation, Campinas, SP, Brazil: FEEC-UNICAMP, August 1997.

[17] S. B. Dewan, G. R. Slemon, A. Straughen, *Power Semiconductor Drives*. New York, USA: John Wiley & Sons, 1984.