A Discrete Sliding Observer for an Induction Motor Drive

A-S. A. Luiz, M. M. Stopa, W. L F. Lopes
DAEE/DES/CEFET-MG
CEP 30510-000 Belo Horizonte MG BRAZIL
asal@daee.des.cefetmg.br, marcelo@daee.des.cefetmg.br, lafontaine@daee.des.cefetmg.br

S. R. Silva, B. R. Menezes
DEE/UFMG e DELT/UFMG
CEP 30510-000 Belo Horizonte MG BRAZIL
selenios@cpdee.ufmg.br e brm@cpdee.ufmg.br

***Abstract*- This work presents an alternative discrete design for a Sliding Observer based on a simplified induction machine discrete model. The rotor flux is obtained with this structure and applied to a Direct Field Oriented Control. A robust design method for the choice of the observer gain matrix is also applied to this structure in order to improve the estimation error convergence. A Direct Field Oriented Control in an electrical drive system and the controller performance with the Sliding Observer are tested. Some experimental results are obtained from these electrical drive system prototype which confirm the ideas presented.**

I. INTRODUCTION

In the last three decades the Slide Mode Theory has been studied and its results applied to control of power converters and electrical machines. Due to its fast response and robustness it has shown to be very interesting in those kind of plant. On the other hand, the Direct Method of Field Oriented Control for induction motor drives, proposed by Blaschke in 1972, presents fast torque and speed response. However, as it is well known, the Direct Orientation needs a reliable flux information, concerning both flux magnitude and position. For this reason, great efforts have been made in last decades in order to obtain the machine flux. Several studies can be found in this field, [1, 3, 4, 5, 11].

Taking into consideration Slide Mode and Field Orientation Theories, Sliding Observers were recently proposed [8, 9]. They are simpler than other topologies and have shown to behave satisfactorily well, if it is compared to classical models [6]. In all the cases, associated to technological advances in digital signal processing, sampled data implementation of power converter and electrical machine controllers has become very common nowadays. In this kind of implementation, dynamic equations are supposed to be in a discrete time state space. In the estimation model literature a common design procedure consist of two steps: First, continuous time estimator equations are obtained, then dicretization of the continuous equations is developed. For this purpose is frequently applied one of two discretization methods: Foward Euler and Exact Matrix Exponential. The first method presents poor performance and instability and acceptable results are obtained only with very short sampling periods [10]. The second method, on the other hand, is difficult to apply in the full-order observer discretizations, and requires excessive increase in the computational time [10].

The Sliding Observer presented in this work is based on disturbance rejection capability and convergence rate of estimation error. Its dynamic and steady state performance characteristics are determined by $\boldsymbol{H_\infty}$ norm of its transfer function including disturbance effects. In this work we applied a simplified discrete design method to obtain the discrete Sliding Observer. This method, on the other hand, consists in obtaining the time-variant discrete machine model and then writing observers equations from these discrete machine equations.

In this paper the performance of proposed ideas is tested in transient and steady state conditions. Some experimental results, are obtained in a 2 HP electrical drive prototype, are used to evaluate the performance of Sliding Observer. The Direct Field Oriented Control System with discrete structure is also tested.

II. INDUCTION MACHINE DISCRETE MODEL

The idealized dynamic machine equations in matrix notation, in a **dq0** stationary reference frame are given by:

$$\boldsymbol{p}\lambda_s = \boldsymbol{v}_s - \boldsymbol{r}_s \boldsymbol{i}_s \qquad (1)$$

$$\boldsymbol{p}\lambda_r = -\boldsymbol{r}_r \boldsymbol{i}_r + \boldsymbol{J}\omega_r \lambda_r$$

$$\lambda_s = \boldsymbol{L}_s \boldsymbol{i}_s + \boldsymbol{L}_m \boldsymbol{i}_r \qquad (2)$$

$$\lambda_r = \boldsymbol{L}_r \boldsymbol{i}_r + \boldsymbol{L}_m \boldsymbol{i}_s$$

$$\boldsymbol{I} = \begin{bmatrix} 1 & 0 \\ 0 & 1 \end{bmatrix} \quad \boldsymbol{J} = \begin{bmatrix} 0 & -1 \\ 1 & 0 \end{bmatrix} \qquad (3)$$

where $\boldsymbol{v_s}$, is the stator voltage, $\boldsymbol{i_s}$ and $\boldsymbol{i_r}$ are stator and rotor currents and λ_s and λ_r are stator and rotor fluxes, all in the stationary reference frame. $\boldsymbol{r_s}$ and $\boldsymbol{r_r}$ are the stator and rotor resistances and ω_r is rotor speed. $\boldsymbol{L_s}$, $\boldsymbol{L_r}$ and $\boldsymbol{L_m}$ are the stator, rotor and mutual inductances.

After some rearrangement these machine dynamic equations and their state matrixes can be written as:

$$\boldsymbol{p}\lambda_s = -\boldsymbol{ar}_s \lambda_s + \boldsymbol{cr}_s \lambda_r + \boldsymbol{v}_s \qquad (4)$$

$$\boldsymbol{p}\lambda_r = \boldsymbol{cr}_r \lambda_s + \left(\boldsymbol{J}\omega_r - \boldsymbol{br}_r\right)\lambda_r$$

$$\boldsymbol{A}(\boldsymbol{t}) = \begin{bmatrix} -\boldsymbol{ar}_s \boldsymbol{I} & \boldsymbol{cr}_s \boldsymbol{I} \\ \boldsymbol{cr}_r \boldsymbol{I} & \left(\boldsymbol{J}\omega_r - \boldsymbol{br}_r \boldsymbol{I}\right) \end{bmatrix} \quad \text{e} \quad \boldsymbol{B}(\boldsymbol{t}) = \begin{bmatrix} \boldsymbol{I} & \underline{0} \\ \underline{0} & \boldsymbol{I} \end{bmatrix} \qquad (5)$$

$$\boldsymbol{u} = \begin{bmatrix} \boldsymbol{v}_{sd} & \boldsymbol{v}_{sq} & 0 & 0 \end{bmatrix}^T \quad \underline{0} = \begin{bmatrix} 0 & 0 \\ 0 & 0 \end{bmatrix} \qquad (6)$$

where $\boldsymbol{a} = 1/\sigma \boldsymbol{L}_s$, $\boldsymbol{b} = 1/\sigma \boldsymbol{L}_r$ e $\boldsymbol{c} = \boldsymbol{L}_m / \sigma \boldsymbol{L}_s \boldsymbol{L}_r$ e $\sigma \equiv 1 - \boldsymbol{L}_m^2 / (\boldsymbol{L}_s \boldsymbol{L}_r)$.

The induction machine discrete model presented here is obtained as an adaptation of the ideas in [10], in a stationary reference frame. The design consist of a decomposition of the matrix $\boldsymbol{A}$(t) in two matrixes $\boldsymbol{A_c}$ and $\boldsymbol{A_v}$, such as $\boldsymbol{A}$(t) = $\boldsymbol{A_c}$ + $\boldsymbol{A_v}$. The matrixes $\boldsymbol{A_c}$ and $\boldsymbol{A_v}$ are respectively a constant and a time variant matrixes:

$$\boldsymbol{A}_c = \begin{bmatrix} -\boldsymbol{a}\boldsymbol{r}_s \boldsymbol{I} & \boldsymbol{c}\boldsymbol{r}_s \boldsymbol{I} \\ \boldsymbol{c}\boldsymbol{r}_r \boldsymbol{I} & -\boldsymbol{b}\boldsymbol{r}_r \boldsymbol{I} \end{bmatrix} \text{ e } \boldsymbol{A}_v = \begin{bmatrix} \underline{0} & \underline{0} \\ \underline{0} & \boldsymbol{J}\omega_r \end{bmatrix} \tag{7}$$

By definition of vector $\boldsymbol{u_r}$ which represents voltage drops due to the current across the stator and rotor resistances, these matrixes and (4), (5) and (6) lead us to following equation:

$$\boldsymbol{p}\lambda = \boldsymbol{A}_v \lambda + \boldsymbol{B}\overline{\boldsymbol{u}} \tag{8}$$

where $\lambda = \begin{bmatrix} \lambda_s^T & \lambda_r^T \end{bmatrix}^T$:

$$\overline{\boldsymbol{u}} = \boldsymbol{u}_r + \boldsymbol{u} \tag{9}$$

and

$$\boldsymbol{u}_r = \boldsymbol{A}_c \lambda = \begin{bmatrix} -\boldsymbol{R}_s \boldsymbol{i}_{sd} & -\boldsymbol{R}_s \boldsymbol{i}_{sq} & -\boldsymbol{R}_r \boldsymbol{i}_{rd} & -\boldsymbol{R}_r \boldsymbol{i}_{rq} \end{bmatrix}^T \tag{10}$$

If we assume the rotor speed constant over an interval of length $\boldsymbol{T_s}$ the matrix $\boldsymbol{A_v}$ can be taken as piecewise constant. Since we also assume a zero-order-hold sampling in the input $\overline{\boldsymbol{u}}$, we will obtain from (8), (9) and (10) the machine discrete model in stationary frame as:

$$\lambda(\boldsymbol{k}+1) = \Phi\lambda(\boldsymbol{k}) + \Gamma\overline{\boldsymbol{u}}(\boldsymbol{k}) \tag{11}$$

$$\overline{\boldsymbol{u}}(\boldsymbol{k}) = \boldsymbol{u}(\boldsymbol{k}) + \boldsymbol{A}_c \lambda(\boldsymbol{k}) \tag{12}$$

$$\Phi = \boldsymbol{e}^{\boldsymbol{A_v T_S}} \quad \text{ou} \quad \Phi = \begin{bmatrix} \Phi_{11} & \underline{0} \\ \underline{0} & \Phi_{22} \end{bmatrix} \tag{13}$$

$$\Gamma = \left(\int_o^{\boldsymbol{T_S}} \boldsymbol{e}^{\boldsymbol{A_v}\tau} d\tau \right) \boldsymbol{B} \quad \text{ou} \quad \Gamma = \begin{bmatrix} \Gamma_{11} & \underline{0} \\ \underline{0} & \Gamma_{22} \end{bmatrix} \tag{14}$$

where

$$\Phi_{11} = \boldsymbol{I} \tag{15}$$

$$\Phi_{22} = \boldsymbol{cos}(\omega_r \boldsymbol{T}_s)\boldsymbol{I} + \boldsymbol{sin}(\omega_r \boldsymbol{T}_s)\boldsymbol{J} \tag{16}$$

$$\Gamma_{11} = \boldsymbol{T}_s \boldsymbol{I} \tag{17}$$

$$\Gamma_{22} = \frac{\boldsymbol{sin}(\omega_r \boldsymbol{T}_s)}{\omega_r}\boldsymbol{I} + \frac{1 - \boldsymbol{cos}(\omega_r \boldsymbol{T}_s)}{\omega_r}\boldsymbol{J} \tag{18}$$

Then, the substitution of (12) in (11), shows that:

$$\lambda(\boldsymbol{k}+1) = \boldsymbol{F}\lambda(\boldsymbol{k}) + \boldsymbol{G}\boldsymbol{u}(\boldsymbol{k}) \tag{19}$$

$$\boldsymbol{F} = \begin{bmatrix} \Phi + \Gamma \boldsymbol{A}_c \end{bmatrix} \quad \text{e} \quad \boldsymbol{G} = \begin{bmatrix} \boldsymbol{G}_{11} & \underline{0} \end{bmatrix}^T \tag{20}$$

which, after a combination of (19) with (2) allow us to write:

$$\begin{bmatrix} \boldsymbol{i}_s(\boldsymbol{k}+1) \\ \lambda_r(\boldsymbol{k}+1) \end{bmatrix} = \begin{bmatrix} \boldsymbol{F}_{aa} & \boldsymbol{F}_{ab} \\ \boldsymbol{F}_{ba} & \boldsymbol{F}_{bb} \end{bmatrix} \begin{bmatrix} \boldsymbol{i}_s(\boldsymbol{k}) \\ \lambda_r(\boldsymbol{k}) \end{bmatrix} + \begin{bmatrix} \boldsymbol{G}_a \\ \boldsymbol{G}_b \end{bmatrix} \boldsymbol{v}_s(\boldsymbol{k}) \tag{21}$$

where

$$\begin{aligned} \boldsymbol{F}_{aa} &= \Phi_{11} - \boldsymbol{a}\boldsymbol{r}_s \Gamma_{11} - (\boldsymbol{L}_m^2 / \sigma \boldsymbol{L}_s \boldsymbol{L}_r)(\boldsymbol{R}_r / \boldsymbol{L}_r)\Gamma_{22} \\ \boldsymbol{F}_{ab} &= \boldsymbol{c}\left[\Phi_{11} - \Phi_{22} + (\boldsymbol{R}_r / \boldsymbol{L}_r)\Gamma_{22}\right] \\ \boldsymbol{F}_{ba} &= \boldsymbol{L}_m (\boldsymbol{R}_r / \boldsymbol{L}_r)\Gamma_{22} \\ \boldsymbol{F}_{bb} &= \Phi_{22} - (\boldsymbol{R}_r / \boldsymbol{L}_r)\Gamma_{22} \\ \boldsymbol{G}_a &= \boldsymbol{a}\Gamma_{11} \\ \boldsymbol{G}_b &= \underline{0} \end{aligned} \tag{22}$$

III. THE SLIDING OBSERVER

The Sliding observer has a different topology from the classical ones [1, 11] because it is a non-linear model based on Slide Mode Theory [2]. In this model a non-linear corrective term $\boldsymbol{K}\text{sign}(\xi)$ is added to machine equations and it is given by:

$$\begin{aligned} \boldsymbol{p}\hat{\boldsymbol{i}}_s &= \hat{\boldsymbol{A}}_{11}\hat{\boldsymbol{i}}_s + \hat{\boldsymbol{A}}_{12}\hat{\lambda}_r + \hat{\boldsymbol{B}}_1 \boldsymbol{v}_s + \boldsymbol{K}\text{sign}(\hat{\boldsymbol{i}}_s - \boldsymbol{i}_s) \\ \boldsymbol{p}\hat{\lambda}_r &= \hat{\boldsymbol{A}}_{21}\hat{\boldsymbol{i}}_s + \hat{\boldsymbol{A}}_{22}\hat{\lambda}_r - \boldsymbol{K}\boldsymbol{L}\text{sign}(\hat{\boldsymbol{i}}_s - \boldsymbol{i}_s) \end{aligned} \tag{23}$$

where $\boldsymbol{r}_s' \equiv \boldsymbol{r}_s + \boldsymbol{r}_r \boldsymbol{L}_m^2 / \boldsymbol{L}_r^2$, $\omega_{br} \equiv (\boldsymbol{r}_r / \boldsymbol{L}_r)\boldsymbol{I} - \boldsymbol{J}\omega_r$

$$\boldsymbol{A}_{11} = \frac{\boldsymbol{r}_s'}{\sigma \boldsymbol{L}_s}\boldsymbol{I},\ \boldsymbol{A}_{12} = \frac{\boldsymbol{L}_m}{\sigma \boldsymbol{L}_s \boldsymbol{L}_r}\omega_{br},\ \boldsymbol{A}_{21} = \frac{\boldsymbol{L}_m \boldsymbol{r}_r}{\boldsymbol{L}_r}\boldsymbol{I},\ \boldsymbol{A}_{22} = -\omega_{br},\ \boldsymbol{B}_1 = \frac{1}{\sigma \boldsymbol{L}_s}\boldsymbol{I}$$

$$\boldsymbol{K} = \boldsymbol{K}_1 \boldsymbol{I} + \boldsymbol{K}_2 \boldsymbol{J}\ ,\ \boldsymbol{L} = \boldsymbol{L}_1 \boldsymbol{I} + \boldsymbol{L}_2 \boldsymbol{J}$$

and ξ is the sliding hiperplane given by:

$$\xi = \begin{bmatrix} \xi_1 & \xi_2 \end{bmatrix}^T = (\hat{\boldsymbol{i}}_s - \boldsymbol{i}_s) = 0 \tag{24}$$

The sufficient conditions that guarantee existence of sliding mode are:

$$\xi_1 \dot{\xi}_1 < 0 \quad , \quad \xi_2 \dot{\xi}_2 < 0 \tag{25}$$

They are satisfied if $K_1 + K_2 < -\Delta_{max}$ and $K_1 - K_2 < -\Delta_{max}$

$$\Delta_{max} = \boldsymbol{max}\left[\boldsymbol{a}_x\left|\xi_1\right| + \Delta_1 \quad \boldsymbol{a}_x\left|\xi_2\right| + \Delta_2\right] \tag{26}$$

$$\Delta_1 = \boldsymbol{bound\ of}\left\{\left|\zeta_1\right| + \boldsymbol{c}_x\left|\hat{\lambda}_{rd} - \lambda_{rd}\right| + \boldsymbol{d}\left|\hat{\lambda}_{rq} - \lambda_{rq}\right|\right\}$$

$$\Delta_2 = \boldsymbol{bound\ of}\left\{\left|\zeta_2\right| + \boldsymbol{c}_x\left|\hat{\lambda}_{rd} - \lambda_{rd}\right| + \boldsymbol{d}\left|\hat{\lambda}_{rq} - \lambda_{rq}\right|\right\}$$

$$\boldsymbol{a}_x = \frac{\boldsymbol{r}_s'}{\sigma \boldsymbol{L}_s},\ \boldsymbol{c}_x = \frac{\boldsymbol{r}_r}{\varepsilon \boldsymbol{L}_r},\ \boldsymbol{d} = \frac{\omega_r}{\varepsilon},\ \varepsilon = \frac{\sigma \boldsymbol{L}_s \boldsymbol{L}_r}{\boldsymbol{L}_m},\ \boldsymbol{D}\varpi = \left[\zeta_1 \quad \zeta_2\right]^T$$

The Sliding Observer is represented in block diagram form as in the Figure 1.

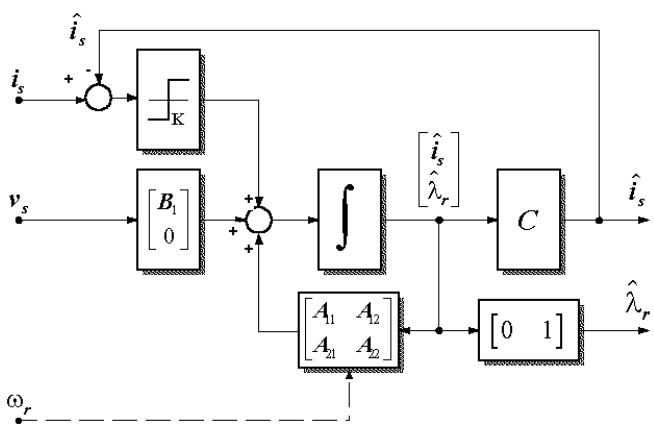

Figure 1 Block Diagram of the Sliding Observer

The Discrete Sliding Observer can be written when the linear corrective terms $\boldsymbol{K}\mathrm{sign}(\xi)$ and $\boldsymbol{LK}\mathrm{sign}(\xi)$ are added to discrete machine equations (21) which then become:

$$\begin{bmatrix} \hat{\boldsymbol{i}}_s(\boldsymbol{k}+1) \\ \hat{\lambda}_r(\boldsymbol{k}+1) \end{bmatrix} = \begin{bmatrix} \boldsymbol{F}_{aa} & \boldsymbol{F}_{ab} \\ \boldsymbol{F}_{ba} & \boldsymbol{F}_{bb} \end{bmatrix} \begin{bmatrix} \hat{\boldsymbol{i}}_s(\boldsymbol{k}) \\ \hat{\lambda}_r(\boldsymbol{k}) \end{bmatrix} + \begin{bmatrix} \boldsymbol{G}_a \\ \boldsymbol{G}_b \end{bmatrix} \boldsymbol{v}_s(\boldsymbol{k}) + \begin{bmatrix} \boldsymbol{k}_1 \\ -\boldsymbol{Lk}_1 \end{bmatrix} \mathrm{sign}(\xi)$$

IV. DESIGN METHOD

The gain choice design method for the Sliding Observer in this work was proposed in [8]. The observer design must be following some steps described in [5]. This method is based on disturbance rejection capability and convergence rate of estimation error. It was developed to the Sliding Observer, but it is also applicable to other classical reduced order observers as shown in [6].

The Sliding Observer error dynamic, including the disturbance effect is given by:

$$\dot{\boldsymbol{e}}_2 = (\boldsymbol{A}_{22} + \boldsymbol{LA}_{12})\boldsymbol{e}_2 + \boldsymbol{F}\varpi \tag{27}$$

$$\boldsymbol{L}_1 = \frac{\sigma \boldsymbol{L}_s \boldsymbol{L}_r}{\boldsymbol{L}_m}\left[1 - \frac{\frac{\boldsymbol{r}_r}{\boldsymbol{L}_r}\alpha + \omega_r \beta}{\left(\frac{\boldsymbol{r}_r}{\boldsymbol{L}_r}\right)^2 + \left(\omega_r\right)^2}\right] \tag{28}$$

$$\boldsymbol{L}_2 = \frac{\sigma \boldsymbol{L}_s \boldsymbol{L}_r}{\boldsymbol{L}_m}\left[\frac{\frac{\boldsymbol{r}_r}{\boldsymbol{L}_r}\beta - \omega_r \alpha}{\left(\frac{\boldsymbol{r}_r}{\boldsymbol{L}_r}\right)^2 + \left(\omega_r\right)^2}\right]$$

V. ROTOR FLUX FIELD ORIENTED CONTROL SYSTEM

The corresponding machine equations to current fed induction motor are:

$$\left(\frac{1}{\boldsymbol{T}_r} + \frac{\boldsymbol{d}}{\boldsymbol{dt}}\right)\lambda_r = \frac{\boldsymbol{M}}{\boldsymbol{T}_r}\boldsymbol{i}_{sx} \tag{29}$$

$$\left(\omega_{mr} - \omega_r\right)\lambda_r = \frac{\boldsymbol{M}}{\boldsymbol{T}_r}\boldsymbol{i}_{sy} \tag{30}$$

$$\boldsymbol{T}_e = \frac{3}{2}\frac{\boldsymbol{P}}{2}\frac{\boldsymbol{M}}{\boldsymbol{L}_r}\lambda_r\ \boldsymbol{i}_{sy} \tag{31}$$

where $\boldsymbol{i}_{sx}$ and $\boldsymbol{i}_{sy}$ are flux oriented direct axis and quadrature axis stator currents.

These equations show the rotor flux dependence to the direct axis current and electromagnetic torque to quadrature axis current. The rotor flux control applies in its implementation these stator current components as shown in Figure 2.

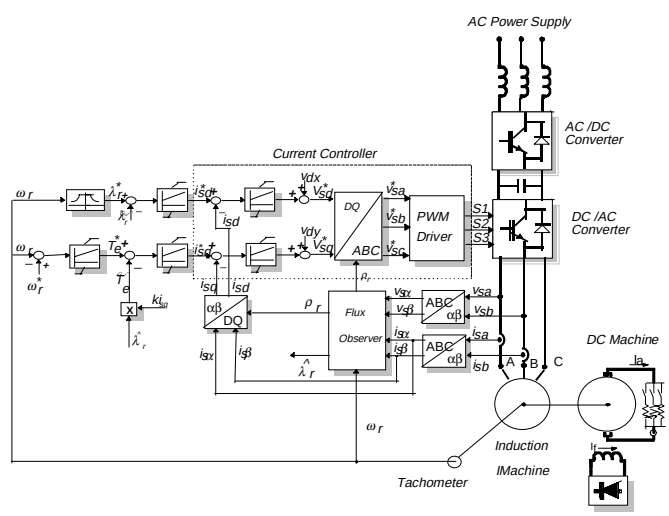

Figure 2 Rotor Flux Direct Oriented Control System.

VI. EXPERIMENTAL RESULTS

This section presents practical results. The observers were implemented in a discrete time state space data system. The discrete sliding model were designed using the machine discrete model specially developed to this observer. The observer was implemented in field orientated control as shown in Figure 2, with a current controller using PWM inverter.

A. Transient and Stead State Results

An AC electrical drive system with a IGBT inverter, a system based on PC Pentium 133 MHz and an acquisition board - Advantec PCL 818, as Figure 3, were developed to the control and the observer implementation. The algorithms were written with BORLAND C software version 3.1. A 4.0 kHz sample rate and 300 V dc voltage were used to obtain the experimental results. The flux and speed references are 0.5 Wb and 150 elec. rad./sec, and the observer poles were $-\alpha \pm j\beta = -15.2 \pm j\omega_r$. The gains of the PI controllers in direct field orientation were chosen by the dynamic machine equations by pole/zero cancellation method. This gains were then tuned in simulation and in real plant.

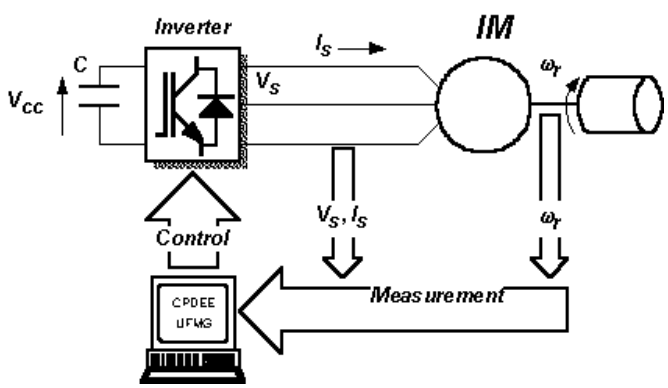

Figure 3 Block Diagram AC drive system for IM.

The induction motor was submitted to two transient conditions: the step up with speed reversion and a square wave torque command. The first transient condition appears in Figure 4 and Figure 5; then the second transient condition will appear in Figure 6, Figure 7 and Figure 8.

In the Figure 5, initially the machine with the observer and control were stepped up from 0 to 150 elec. rad./sec. Some time after the machine with the observer and control is speed reversed from 150 to -150 elec. rad./sec. The Figure 4 shows real and observed **d** axis stator currents and real and observed **q** axis stator currents respectively, in the same interval as Figure 5. We note in the last picture that, both **d** and **q** observed currents follow **d** and **q** real currents. It is important remember that observed current equations depend on the observed flux equation.

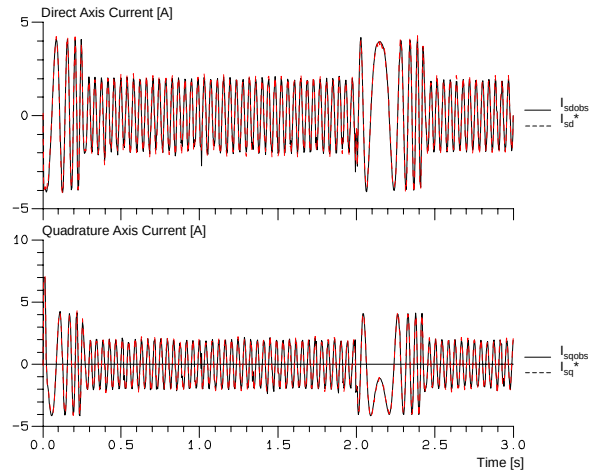

Figure 4 Stepped up and speed reversion.

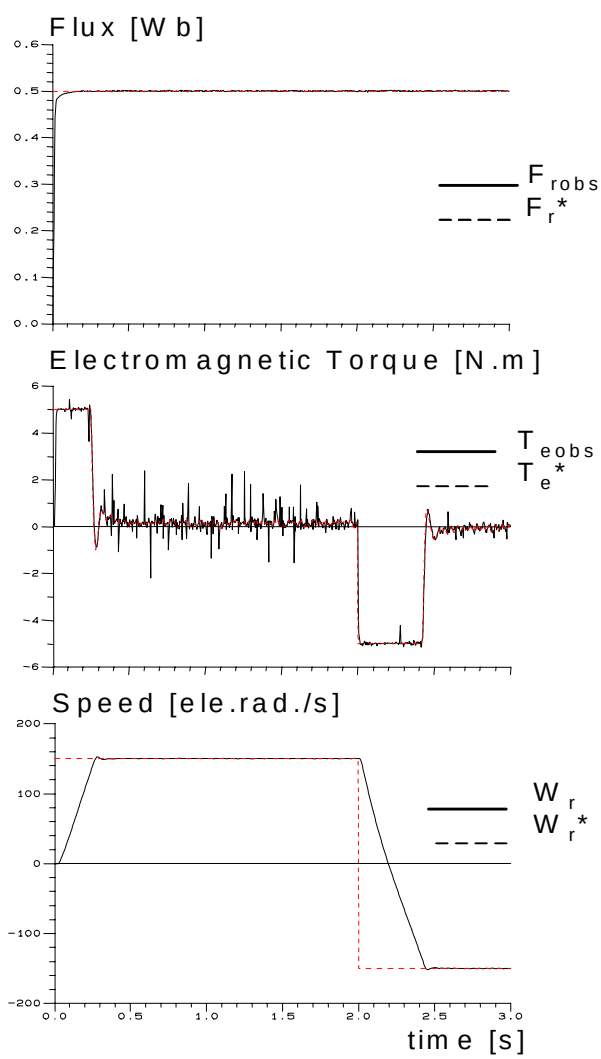

Figure 5 Stepped up and speed reversion

The Figures 6, 7 and 8 were obtained when the induction machine was submitted to a square wave torque command. In the Figure 6, the flux magnitude, the reference and estimated torque, and speed are presented. In this case, the speed behaves like a triangular wave which goes from a positive to a negative value. The torque x speed characteristic, and direct flux x quadrature flux are also shown in the Figures 7 and 8 respectively.

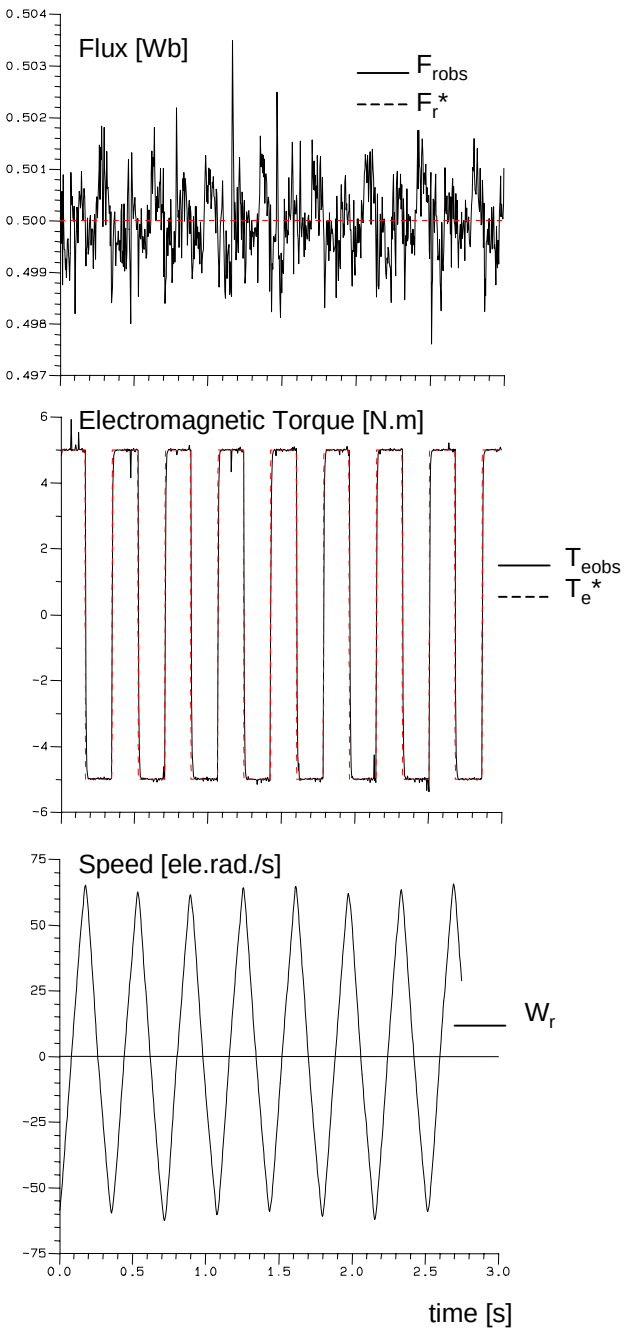

Figure 6 Square wave torque command.

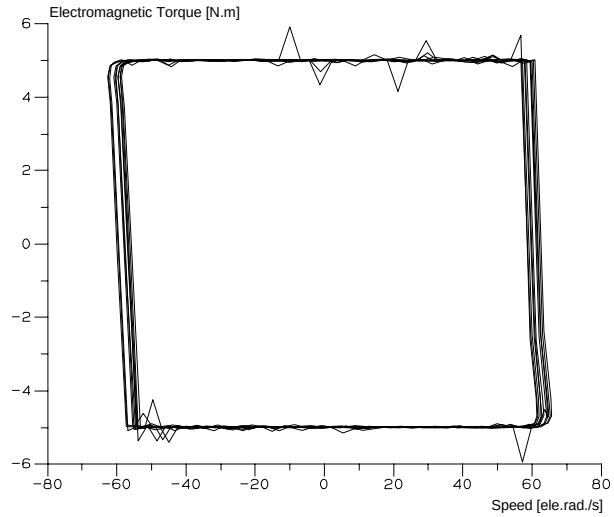

Figure 7 Square wave torque command. Torque x Speed

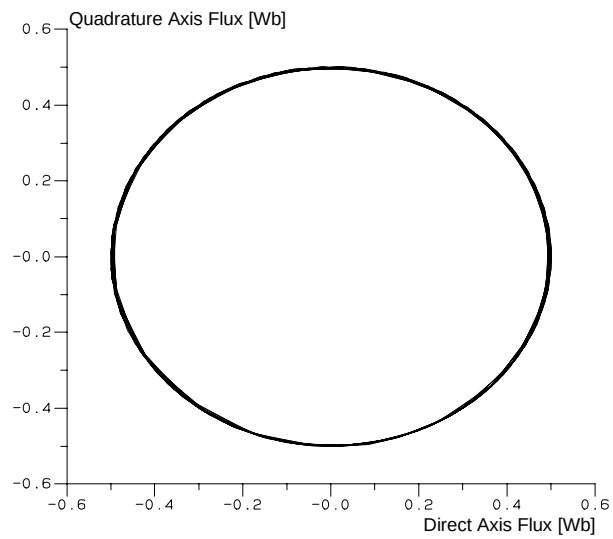

Figure 8 Square wave torque - Direct Flux X Quadrature Flux.

VII. CONCLUSIONS

This work presented an alternative discrete design for a Sliding Observer based on a simplified induction machine discrete model. The proposed structure has as advantage a short implementation requirements, if it is compared to other structures which requires excessive computational time. That can be confirmed by its computational cost as presented in [6]. A Evaluation Methods to this and others observers were also studied to analyze the observer performance in [6]. The Gain Design Method was presented to obtain the a good dynamic performance and fast prediction error convergence. The experimental results confirm the validity of the above ideas, and the Discrete Sliding Observer together with the direct field control and the gain method showed behave satisfactorily in transient conditions and in low speed region.

VIII. ACKNOWLEDGMENT

The authors would like express their thanks to CAPES/MEC, and FAPEMIG, for the fund support provided.

IX. REFERENCES

[1] HOUR, Y., COTTER, V. & KAY, Y. "A Novel Induction machine Flux Observer and Its Application to a High Performance AC Drive System", *Porch. of 10th World Congress on Automatic Control, EFFACE,* Vol. 3, Munich, 1987, pp. 355-360.

[2] ITKIS, U. *Control Systems of Variable Structure,* John Wiley & Sons, Jerusalem Israel, 1976.

[3] P. L. JANSEN, and R. D. LORENZ, "A Physically Insightful Approach to the Design and Accuracy Assessment of Flux Observer for Field Oriented Induction Drives", *Transactions on Industry Applications,* vol. 30, no 1, Jan\Feb. 1994, pp. 101-109.

[4] LIPO, T. A. "Flux Sensing and Control of Static AC Drives by the Use of Flux Coils", *IEEE Transactions on Magnetics,* Vol. MAG-13, No.5, September 1977, pp. 1403-1408.

[5] LUIZ, A-S. A.; SILVA, S. R. & MENEZES, B. R.. " Assessment of Flux Observer Performance for Induction Motor Drives " *23rd International Conference on Industrial Electronics Control & Instrumentation-IECON97***;** New Orleans, Louisiana, USA Vol. 2, pp. 494-499.

[6] LUIZ, A-S. A.; SILVA, S. R. & MENEZES, B. R.. " Estudo de Observadores de Fluxo para Máquinas de Indução " *4º Congresso Brasileiro de Eletrônica de Potência - COBEP97***;** Belo Horizonte, Minas Gerais, BRASIL pp. 503-508.

[7] LUIZ, A-S. A.; STOPA, M. M.; MOREIRA, A. F.; CORTIZO, P. C. & SILVA, S. R. "Controlador Universal de Orientação pelo Campo - Uma Implementação", *10º Congresso Brasileiro de Automática - SBA,* Vol. 4, no 1, Agosto-Setembro1996, pp. 11-22.

[8] SANGWONGWANICH, S.; DOKI, S.; YONEMOTO, T. & OKUMA, S. "Adaptive Sliding Observers for Direct Field-Oriented Control of Induction Motor", *Proc. of International Power Electronics Conference, IPEC,* Tokyo, 1990, pp.1235-1242.

[9] SANGWONGWANICH, S.; YONEMOTO, T. & OKUMA, S. "Time Domain Characteristics of Sliding Observer for Flux Estimation of Induction Motor and Its Implementation"**,** *Proc. of Power Electronics Specialist Conference (PESC),* 1991, pp. 592-595.

[10] SILVINO, J. L.; BOTTURA, C. P. & RESENDE, P. "A Flux Observer for Induction Machine Based On Time-Variant Discreet Model", *IEEE Transaction on Industry Applications,* Vol. 29, nº 2, March\April 1993, pp. 349-354.

[11] VERGHESE, G.C. & SANDERS, S.R. "Observers for Flux Estimation in Induction Machines", *IEEE Trans. on Industrial Electronics,* Vol. IE-35, No.1, 1988, pp.85-94.

X. APPENDICES

Induction Machine: 2HP 220/380V, 1720 rpm
r_s=4.08 Ohms; r_r=4.87 Ohms;
L_{ls}=10.4 mH; L_{ls}=18.5 mH; L_m=254.0 mH;
J=0.0045 kg.m^2