A DESIGN METHODOLOGY FOR DUTY-CYCLE MODULATED THREE-PHASE BOOST RECTIFIERS

Mauricio C. Azevedo, José Luiz F. Vieira e Domingos S. L. Simonetti

Dept. of Electrical Engineering - Federal University of Espírito Santo
Cx. Postal 01-9011 – Vitória – ES – 29060-970 - BRAZIL
d.simonetti@ele.ufes.br fax: (5527) 3352650

***Abstract* – Duty-cycle modulation of single-switch three-phase boost rectifiers has been demonstrated to be an effective way to reduce their input current harmonics. But a converter design methodology for such control approach is not available yet. This paper intends to fulfill this lack, presenting a design approach for this operation mode. Design equations are provided for some operation conditions, and experimental results validate the approach.**

I - INTRODUCTION

Single-switch three-phase boost rectifiers are a robust way of achieving high power factor AC-DC conversion in the 10kVA power range [1-4]. However, the operation with constant switching frequency and fixed duty-cycle can lead to excessive low-order harmonic levels, that exceeds the limits specified by international regulations for this power range, in special the standard IEC61.000-3-2. Recently, it has been demonstrated that the input current harmonic content of single-switch three-phase boost rectifiers can be controlled by harmonic-injection duty-cycle modulation (constant switching frequency) [5-8]. The optimum duty-cycle modulation [8] is a complex and difficult to be implemented function. Alternative solutions are available [5,6], but in general such solutions require a high-precision circuit in order to generate the adequate signal waveform with correct phase displacement. In fact, if the harmonic-injection is not well synchronized, an opposite effect can be obtained (harmonics increase). One of the simplest and effective solution to modulate the duty-cycle is feedforwarding the inverse of a three-phase diode-bridge output voltage into the duty-cycle voltage control [7] as shown in Fig. 1.

The effective duty-cycle can be written as:

$$d = D\,(1 - mod\,\cos(\omega t)), \qquad -30^{o} \le \omega t \le 30^{o} \qquad (1)$$

and it is cyclical within a 60° period, where D is a constant defined here as "duty-cycle design constant". The weight of the modulation introduced into the duty-cycle is called the modulation index *mod*. The influence of the modulation index in the input current waveform can be seen in Fig. 2, for a converter with M=2.11 (M is the ratio V_o/V_1– output voltage / peak of line-to-neutral input voltage). This paper presents a methodology to design the above mentioned duty-cycle modulated single-switch three-phase boost rectifiers.

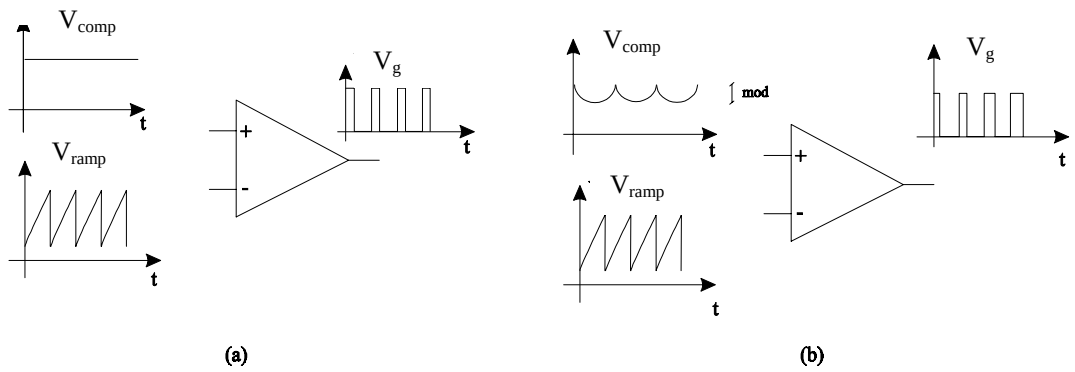

Fig. 1 - (a) Constant duty-cycle operation; (b) modulated duty-cycle operation.

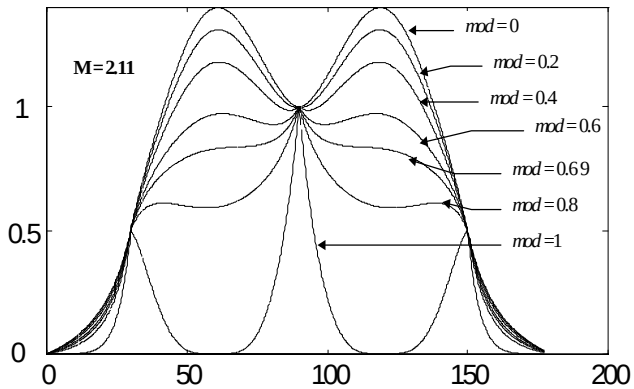

Fig. 2 - Input current waveform variation due to the modulation index – mod (mod=0 means constant duty cycle).

II - THE SINGLE-SWITCH THREE-PHASE BOOST RECTIFIER AND THE IEC61000-3-2

The IEC61.000-3-2 standard deals with harmonic current levels for a single equipment supplied from a 220-240V mains (phase voltage, rms), and having an input current lower than 16A (rms). For a three-phase equipment, the limits are shown in Table I.

Table I
IEC61000-3-2 Class A

Harmonic	Maximum allowed harmonic current (A)
5th	1.14
7th	0.77
11th	0.33
13th	0.21

For the converter shown in Fig. 3 (operating with constant switching frequency and fixed duty-cycle), it has been demonstrate that the 5th harmonic is the most restrictive concerning the rated power of the converter. Fig. 4 shows the power restrictions imposed by 5th, 7th, 11th and 13th harmonics (high-order harmonics are negligible, and not shown here). It can be seen that the worst restriction occurs for low M values. For higher M values (M>4) it is possible to operate with the full power given by the standard, but the drawback is the resulting high output voltage (higher voltage stress on the semiconductors).

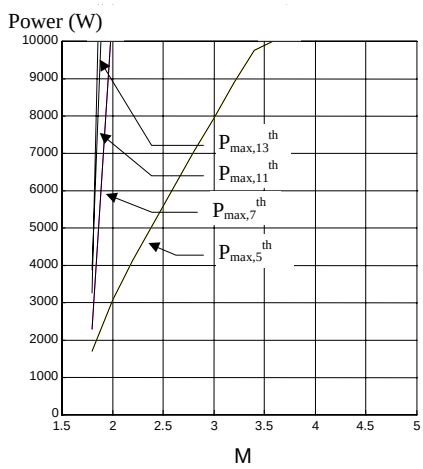

Fig. 4 – Power limits imposed by harmonics for constant switching frequency and fixed duty-cycle operation.

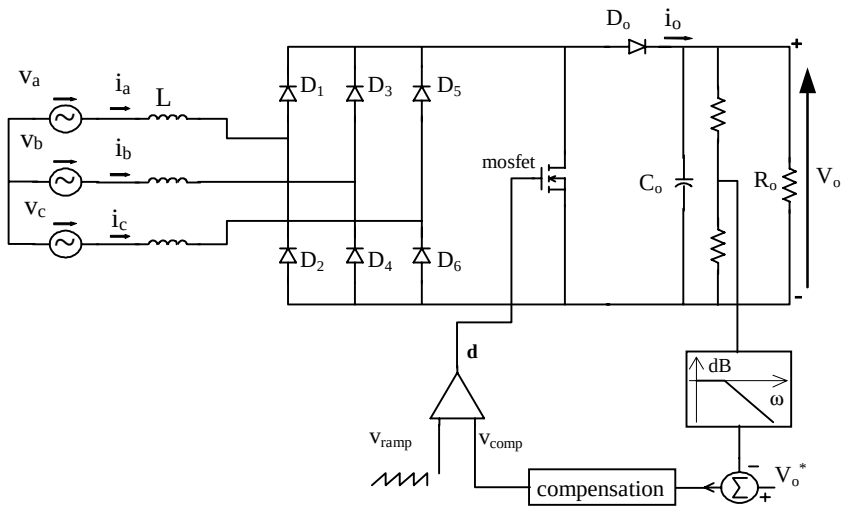

Fig. 3 – Single-switch three-phase boost rectifier with constant duty-cycle.

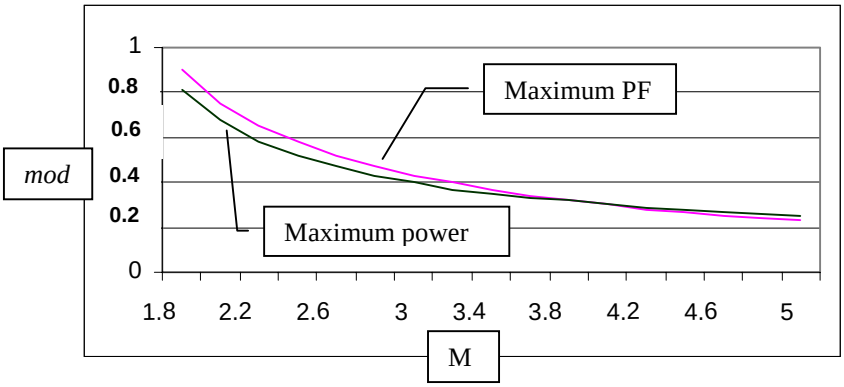

Fig. 5 – The mod value which maximizes power factor and extends rated power in compliance with IEC standard.

By using the mentioned duty-cycle modulation, and through numerical analysis, it is possible to find the modulation index which maximizes the converter PF or maximizes the converter rated power according to the IEC6100-3-2 standard. If the extension of rated power in compliance with IEC61.000-3-2 is employed as a criterion, the best result is achieved when the *mod* value makes the ratio 13th harmonic / 5th harmonic equal to those limits specified in Table I. The calculated *mod* for M values between 1.8 and 5 is shown in Fig. 5 for both cases, whereas the Fig. 6 shows the maximum operation power for both conditions. Comparing Fig.4, Fig.6.a and 6.b one can observe that a great improvement in the allowable power can be achieved when using duty-cycle modulation, specially in the range $2 \le M \le 3$ (keep in mind that for a line-to-neutral input voltage of 220V rms, the output voltage will be 933V for M=3).

III - The Proposed Design Approach

The analysis of the input current whitout high-order harmonics and using the mentioned duty-cycle modulation leads to the following equations:

$$i_a(\omega t) = \frac{V_o\, d^2 T_s}{2L} \frac{\sin(\omega t)}{[M - 3\sin(\omega t)]}\ ,\ 0° \le \omega t \le 30° \tag{2}$$

$$i_a(\omega t) = \frac{V_o\, d^2 T_s}{4L} \frac{2M\sin(\omega t) + \sqrt{3}\sin(2\omega t - 120°)}{[M - 3\sin(\omega t - 240°)][M - \sqrt{3}\sin(\omega t + 30°)]}\ ,\ 30° \le \omega t \le 60° \tag{3}$$

$$i_a(\omega t) = \frac{V_o\, d^2 T_s}{2L} \frac{M\sin(\omega t) + \sqrt{3}\sin(2\omega t + 60°)}{[M + 3\sin(\omega t - 240°)][M - \sqrt{3}\sin(\omega t + 30°)]}\ ,\ 60° \le \omega t \le 90° \tag{4}$$

$$i_a(\omega t) = i_a(180° - \omega t) = -i_a(180° + \omega t) = -i_a(360° - \omega t) \tag{5}$$

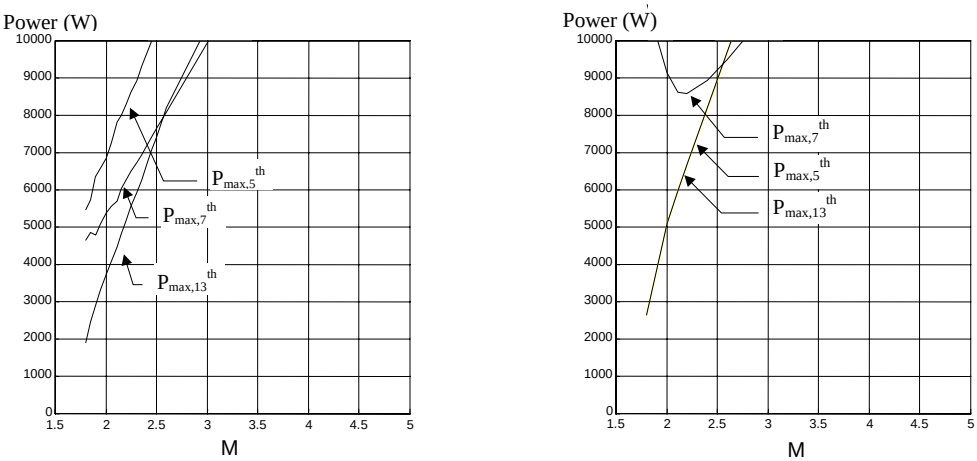

Fig. 6 - Maximum power according to IEC61000-3-2 for (a) mod of maximized PF; (b) mod of maximized power.

and the average output current I_o is given by [9]:

$$I_o = \frac{V_o D^2 T_s}{L_{boost}} L_{par} \tag{6}$$

where:

$$L_{par} = \int_{\pi/3}^{\pi/2} \frac{9}{4M\pi} \frac{[1 - mod \sin(\omega t + \pi/6)]^2 [2M + \sqrt{3}(\sin(3\omega t - \pi/6) - \sin(\omega t - \pi/6))]}{[M + 3\sin(\omega t - 4\pi/3)][M - \sqrt{3}\sin(\omega t + \pi/6)]} d\omega t \tag{7}$$

The first design condition is to operate in DCM. For this condition, the duty-cycle design constant must comply the following inequality:

$$D < D_{max} \tag{8}$$

where:

$$D_{max} = \frac{(M - \sqrt{3})}{M(1 - mod)} \tag{9}$$

It can be observed that if *mod*=0, d=D and $D_{max} = (M - \sqrt{3})/M$, which is in agreement with the DCM design condition for constant duty-cycle operation [3]. The index modulation *mod* can be obtained from Fig. 5 as well as by the following equations derived by curve-fitting approach in the range $2 \leq M \leq 3$:

Maximum power factor:

$$mod = \frac{0.99}{M - 0.68} \tag{10}$$

Maximum power according to IEC61000-3-2:

$$mod = \frac{0.93}{M - 0.62} \tag{11}$$

Also the eq. (7) can be approximated by curve fitting, resulting:

$$L_{par} = k_{mod} \frac{0.73}{M(M - 1.66)} \tag{12}$$

where

$$k_{mod} = (1 - 0.96\, mod)^2 \tag{13}$$

The overall error introduced by using such approximations is less than 3% for maximum power approach, and less than 1% for the maximum power factor approach. Substituting (12) in (6) yields:

$$I_o = \frac{V_o D^2 T_s}{L_{boost}} \frac{0.73 k_{mod}}{M(M - 1.66)} \tag{14}$$

and therefore:

$$L_{boost} = \frac{V_o D^2 T_s}{I_o} \frac{0.73 k_{mod}}{M(M - 1.66)} \tag{15}$$

Introducing small-signal perturbations in (14) ($I_o = \bar{I}_o + \hat{i}_o, V_o = \overline{V}_o + \hat{v}_o, V_1 = \overline{V}_1 + \hat{v}_1, D = \overline{D} + \hat{D}$), using $M=V_o/V_1$ and neglecting cross product of small-signal perturbations, the small-signal equivalent circuit shown in Fig. 7 is obtained.

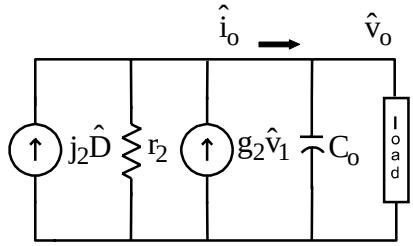

Fig. 7 – Small-signal equivalent circuit.

where:

$$j_2 = \frac{1.46\, k_{mod} \overline{V}_1^2\, \overline{D}\, \overline{T}_s}{L_{boost}(\overline{V}_o - 1{,}66\overline{V}_1)}$$

$$g_2 = \frac{1}{(\overline{V}_o - 1.66\overline{V}_1)} \left[\frac{1.46\, k_{mod} \overline{V}_1\, \overline{D}^2\, \overline{T}_s}{L_{boost}} + 1.66\bar{I}_o \right] \tag{16}$$

$$r_2 = \frac{\overline{V}_o - 1{,}66\overline{V}_1}{\bar{I}_o}$$

and the small-signal transfer function can be derived and is given by (17):

$$\frac{\hat{v}_o}{\hat{D}} = \frac{r_{eq} j_2}{(s C_o r_{eq} + 1)} \tag{17}$$

where:

$$r_{eq} = \frac{R_o r_2}{R_o + r_2} \tag{18}$$

IV - Design Example And Experimental Results

A single-switch three-phase boost rectifier was designed considering the following data:

P_{rated}=1.1kW $\quad$ V_o=380V

$V_{1,rms}$=127V (V_{1pk}= 180 V) $\quad$ f_s=40 kHz

C_o=220μF $\quad$ $M = \frac{V_o}{V_1} = 2.11$

Maximum power factor:

Using eq. (10) the *mod* value is obtained:

$$mod_{PF} = 0.69$$

The duty-cycle design constant is given by (8) and (9):

$$D<0.58$$

It is chosen D=0.464, and by using (13) and (15) results in:

$$L_{boost}=62\mu H$$

Using the values in (18) and (17)(r_{eq}=23Ω) yields:

$$\frac{\hat{v}_o}{\hat{D}} = \frac{286}{0.0051s+1}$$

The input current for rated load is shown in Fig. 8.a, whereas the theoretical and experimental transfer functions are shown in Fig. 8.b.

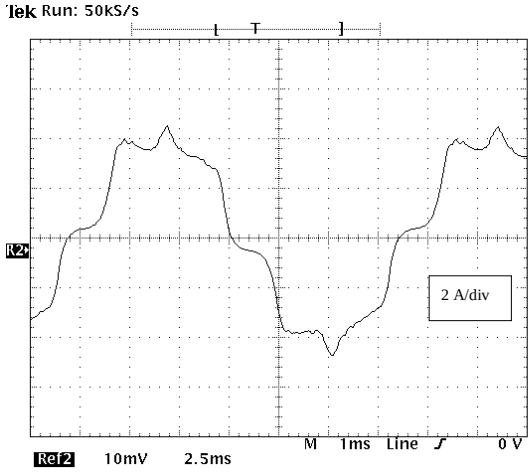

(a)

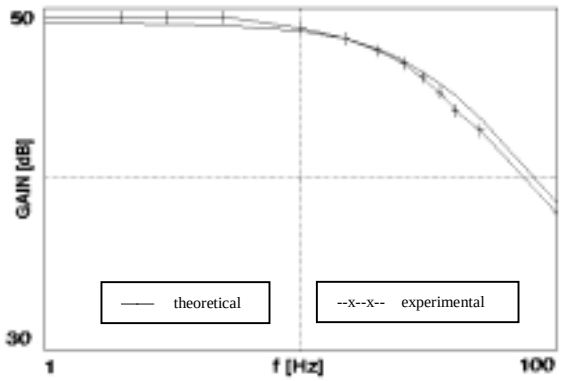

(b)

Fig. 8 – mod=0.69: (a) Experimental input current, rated load; (b) Theoretical and experimental Bode diagram.

Maximum power according to IEC61000-3-2:

Proceeding as above and using (11), the following values are found:

Mod_{IEC}=0.62 D<0.47

The same inductance is used (L_{boost}=62μH), which means D=0.388, resulting:

$$\frac{\hat{v}_o}{\hat{D}} = \frac{344}{0.0051s+1}$$

For this condition, the input current can be seen in the Fig. 9.a whereas theoretical and experimental transfer functions are shown in Fig. 9.b.

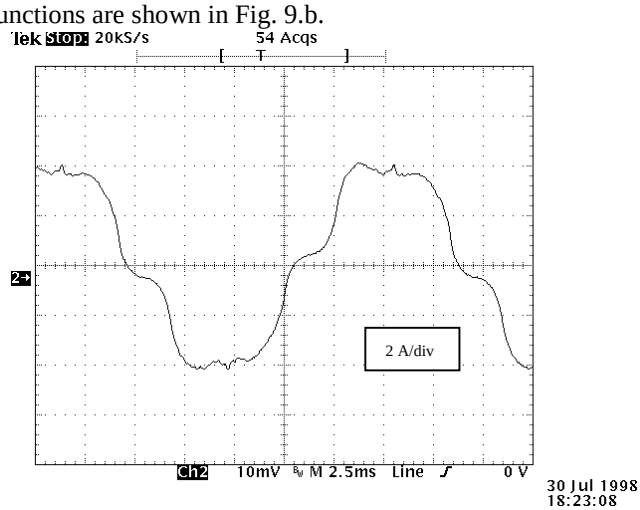

(a)

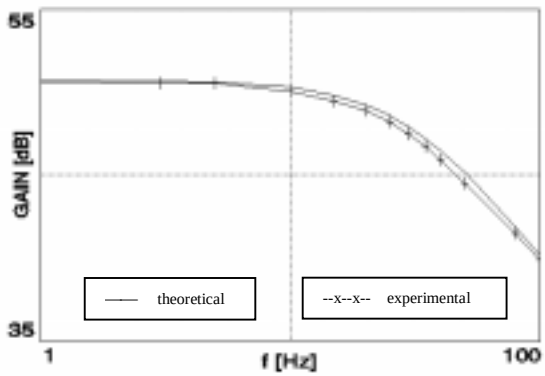

(b)

Fig. 9 – mod=0.62: (a) Experimental input current, rated load; (b) Theoretical and experimental Bode diagram.

It can be noticed from both experimental results that the proposed design approach is simple and effective. Theoretical and experimental Bode diagrams are very similar. The control circuitry employed in the implementation can be seen in Fig. 10.

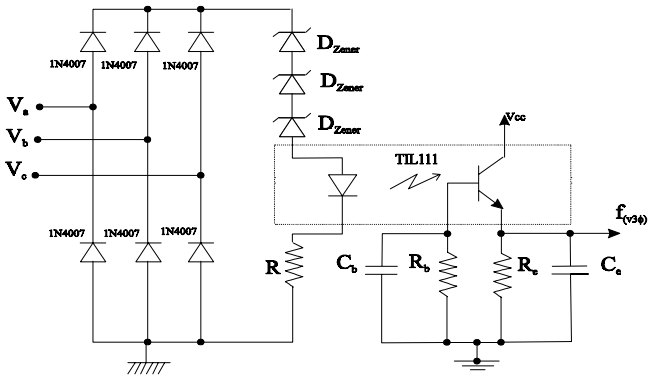

(a)

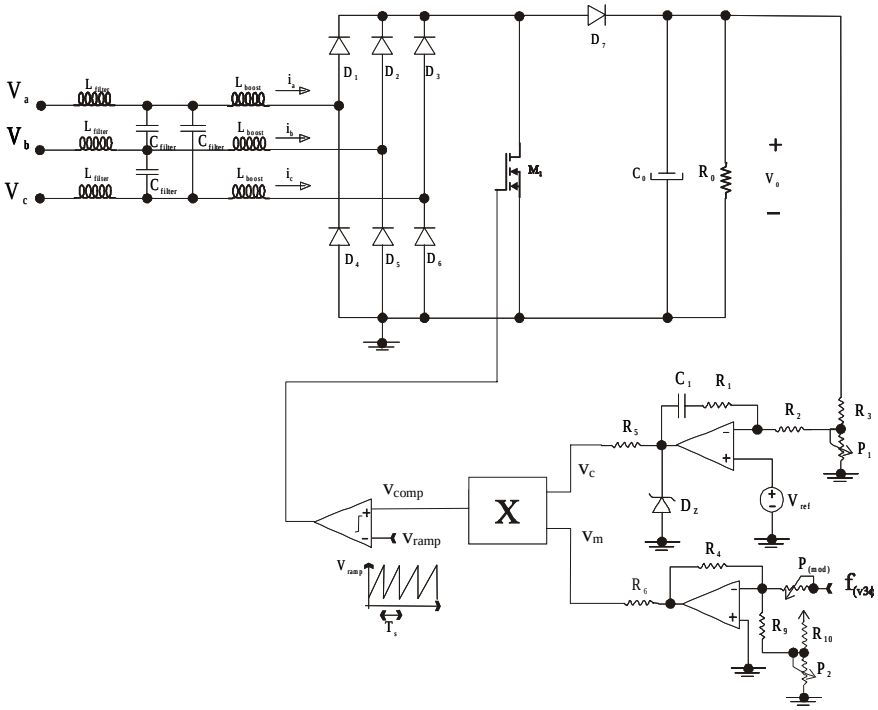

(b)

Fig. 10 - (a) Generating the modulation function (f ($v_{3\Phi}$)); (b) The control circuit for the duty-cycle modulated technique.

V - CONCLUSIONS

Duty-cycle modulation is an effective way to modify the input current profile of a single-switch three-phase boost rectifier, and by using the output voltage of a three-phase diode bridge is a simple solution to obtain the necessary modulation. The design methodology proposed in this paper is easy-to-use and accurate. The boost inductor can be easily calculated, and the small-signal model is very representative. Experimental results validated the proposed approach.

VI - REFERENCES

[1] A. Prasad, P. D. Ziogas, and S. Manias, "An active Power Factor Correction Technique For The Phase Diode Rectifiers", *Conference Record IEEE PESC 1989*, pp. 58 - 65.

[2] E. Ismail, R. W. Erichson, "A Single Transistor Three-Phase Power Factor Resonant Switch For High Quality Rectification", *Conference Record IEEE PESC 1992*, pp. 1341 - 1351.

[3] D. S. L. Simonetti, J. Sebastian and J. Uceda "Single-Switch Three-phase Power Factor Preregulator Under Variable Switching Frequency And Discontinuous Input Current", *Conference Record IEEE PESC* 1993, pp. 657 - 662.

[4] J. Kolar, H. Ertl, and F. C. Zach, " Space Vector-Based Analytical Analysis Of The Input Current Distortion Of A Three-Phase Discontinuous-Mode Boost Rectifier System", *Conference Record IEEE PESC 1993*, pp. 696 - 703.

[5] D. O. Neacsu, Z. Yao and V. Rajagopalan "Optimal PWM Control for Single-Switch Three-Phase AC-DC Boost Converter", *Conference Record IEEE PESC 1996*, pp. 727 - 732.

[6] F. C. Lee and Q. Huang "Harmonic Reduction In A Single-Switch, Three-Phase Boost Rectifier With High Order Harmonic Injected PWM", *Conference Record IEEE PESC* 1996, pp. 1266 -1271.

[7] Y. Jang and M. M. Jovanovic "A Novel, Robust, Harmonic Injection Method For Single-Switch, Three-Phase, Discontinuous-Conduction-Mode Boost Rectifiers" *Conference Record IEEE PESC* 1997, pp. 469-475.

[8] K. Schenk and S. Cuk, "A Simple Three-Phase Power Factor Corrector with Improved Harmonic Distortion", *Conference Record IEEE PESC* 1997, pp. 399-405.

[9] M. C. Azevedo, " An Alternative to Reduce Harmonics in Single-Switch Three-Phase Boost Rectifiers by Duty-Cycle Modulation", MSc. Thesis (in Portuguese), UFES, 04/1998.