A Neuro-Fuzzy Based Rotor Time Constant Identification of an Indirect Vector-Controlled Induction Motor Drive

Lino Rosell Valdenebro, *Student Member, IEEE* lino@dsce.fee.unicamp.br
Jaime Reyes Hernández jaime@dsce.fee.unicamp.br
Edson Bim, *Member, IEEE* bim@dsce.fee.unicamp.br

Universidade Estadual de Campinas
Departamento de Sistemas e Controle de Energia (DSCE)
Caixa Postal 6101
13081-970 Campinas, SP - Brasil
Tel.: (019) 7883710 Fax: (019) 7888504

***Abstract* – In this paper an adaptive field oriented control of induction motor drive is proposed. The adaptive scheme use a neuro-fuzzy approach for the identification of the rotor time constant, which is used to adjust the estimate of the slip angular speed. First a fuzzy logic estimator was developed and tuned, then the fuzzy estimator was implemented by a dynamic backpropagation neural network-based controller. The fast convergence of the fuzzy control is maintained by using adaptive step size of the control variable. The neural network implementation adds the advantage of fast computation, either by a dedicated hardware chip or by digital signal processor (DSP)–based software. Computer simulation results are obtained and the performance of the resulting field oriented controller is analyzed.**

***Index Terms* – Fuzzy Logic, neural networks, field oriented control, parameter identification, induction motor.**

NOMENCLATURE

Ls, Lr	Stator and Rotor inductance
Lm	Mutual inductance
Rs, Rr	Stator and rotor resistance
i, v, λ	Current, voltage and flux vectors
τ_r	Rotor time constant (L_r / R_r)
T_e, T_L	Electromagnetic torque and load torque
ω_r	Rotor electric speed
ω_e	Synchronous frequency
ω_{sl}	Slip frequency
J_m	Moment of inertia
P	Number of poles
p	Differential operator (d / dt)
$\sigma = 1 - \frac{L_m^2}{L_s L_r}$	Leakage factor
(α, β)	$\alpha - \beta$ stationary reference frame
(d, q)	$d - q$ synchronous reference frame

An asterisk (*) is added to indicate command signals, and bold quantities indicate vectors.

I. INTRODUCTION

Variable–speed ac drives employing induction motors and the field-oriented control method have been developed in recent years to the point of meeting the high standards of performance set by dc drives, generally used for industrial applications due to their simple control dynamics.

In general two basics schemes are used in field oriented control [1]. The direct field orientation scheme in which the position of the flux is directly measured by means of search coils or is estimated from stator terminals measurements, and this signal is used in the control to decouple the torque and flux components of the stator currents. This method suffers from high cost and the unreliability of the flux measurement. The second scheme is the indirect field orientation, for which the slip relation is employed to estimate the flux position relative to the rotor, then this estimate is fed forward to the controller. The controller gains of the indirect field oriented method are functions of the motor parameters, which change with temperature, frequency and current amplitude, resulting in a poor transient response and low efficiency [2]. It has been shown that changes in rotor resistance have a most dominant effect on the control performance. An important requirement to obtain good control performance is to make the field oriented control parameters coincide with the actual parameters of the motor.

Many techniques have been reported [3-5] to solve the problem of motor parameter identification while the drive is in field oriented control operation. Intelligent techniques have also been applied to achieve this goal [6,7]. In the present work a neuro-fuzzy approach for the problem of rotor time constant identification is presented. The identification method is presented as an optimization problem where the objective function is defined as the total square error between the motor and the commanded stator currents in the synchronous reference frame. First a fuzzy logic estimator was developed and tuned, then the input-output transfer characteristics of the fuzzy estimator was used to train the neural network, which then replaces the fuzzy estimator in the control system. The fuzzy logic based estimator has the advantage that adaptively change the step size of the control variable, thus fast convergence is achieved [8,9]. The neural network implementation adds the advantage of fast computation, either by a dedicated hardware chip or by digital signal processor (DSP)–based software [10]. Computer simulation results are obtained and the performance of the resulting field oriented controller is analyzed.

II. Indirect Field Oriented Induction Motor Drive

The induction motor model is represented in the synchronous reference fame by the following equations :

$$\boldsymbol{V} = \boldsymbol{AI} \tag{1}$$

with:

$$\boldsymbol{V} = \begin{bmatrix} v_{ds} & v_{qs} & 0 & 0 \end{bmatrix}^T \tag{2}$$

$$\boldsymbol{A} = \begin{bmatrix} R_s + pL_s & -\omega_e L_s & pL_m & -\omega_e L_m \\ \omega_e L_s & R_s + pL_s & \omega_e L_m & pL_m \\ pL_m & -\omega_{sl} L_m & R_r + pL_r & -\omega_{sl} L_r \\ \omega_{sl} L_m & pL_m & \omega_{sl} Lr & R_r + pL_r \end{bmatrix} \tag{3}$$

$$\boldsymbol{I} = \begin{bmatrix} i_{ds} & i_{qs} & i_{dr} & i_{qr} \end{bmatrix}^T \tag{4}$$

$$\omega_{sl} = \omega_e - \omega_r \tag{5}$$

There is one primary constraint for the indirect field oriented control theory: the rotor flux shall have only one nonzero component, i.e.,

$$\lambda_{rq} = 0 \text{ and } \bar{\lambda}_{rqd} = -j\lambda_{rd} \tag{6}$$

From (6) several important relations are derived. The

required slip frequency is a linear function of the stator q axis current and an inverse function of the rotor flux:

$$\omega_{sl} = \frac{1}{\tau_r^*} \frac{L_m}{\lambda_{dr}} i_{qs} \tag{7}$$

The electromagnetic torque is a linear function of the stator q axis current and the rotor flux:

$$T_e = \frac{3}{2} \frac{P}{2} \frac{L_m}{L_r} \lambda_r i_{qs} \tag{8}$$

The indirect field oriented controller block diagram is shown in Fig. 1. With an incorrect value of the slip ω_{sl} due to an incorrect slip calculator time constant τ_r^*, the decoupling condition cannot be achieved, interactions would arise and the control performance deteriorates.

In detuning conditions the relations between the motor and the commanded stator currents can be expressed as a function of a ratio τ_r/τ_r^* as follows [7,11]:

$$i_{ds} = i_{ds}^* \frac{\sqrt{1 + (\frac{i_{qs}^*}{i_{ds}^*})^2}}{\sqrt{1 + (\frac{\tau_r}{\tau_r^*} \frac{i_{qs}^*}{i_{ds}^*})^2}} \tag{9}$$

$$i_{qs} = i_{qs}^* \frac{(\frac{\tau_r}{\tau_r^*}) \sqrt{1 + (\frac{i_{qs}^*}{i_{ds}^*})^2}}{\sqrt{1 + (\frac{\tau_r}{\tau_r^*} \frac{i_{qs}^*}{i_{ds}^*})^2}} \tag{10}$$

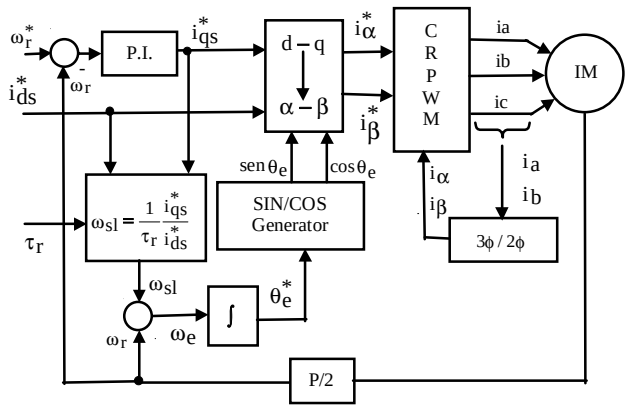

Fig. 1. Indirect field oriented controller block diagram.

The torque and flux components of the stator currents can be obtained using the Park transformation:

$$i_{ds} = i_\alpha \cos(\theta) + i_\beta sin(\theta) \tag{11}$$

$$i_{qs} = -i_\alpha sin(\theta) + i_\beta \cos(\theta) \tag{12}$$

where:

$$\theta = tan^{-1}(\frac{\lambda_{\beta r}}{\lambda_{\alpha r}}) \tag{13}$$

$$\lambda_{\alpha r} = \frac{L_r}{L_m} \left[\int (v_{\alpha s} - R_s i_{\alpha s}) dt - \sigma L_s i_{\alpha s} \right] \tag{14}$$

$$\lambda_{\beta r} = \frac{L_r}{L_m} \left[\int (v_{\beta s} - R_s i_{\beta s}) dt - \sigma L_s i_{\beta s} \right] \tag{15}$$

III. Neuro-Fuzzy Based rotor Time Constant Identification Scheme

The rotor time constant identification procedure can be written as an optimization problem. From (9)-(10) the error functions between the commanded and the motor currents in a synchronous reference frame can be expressed as follows:

$$\varepsilon_1(\frac{\tau_r}{\tau_r^*}) = \hat{i}_{ds} - i_{ds} = i_{ds}^* \frac{\sqrt{1 + (\frac{i_{qs}^*}{i_{ds}^*})^2}}{\sqrt{1 + (\frac{\tau_r}{\tau_r^*} \frac{i_{qs}^*}{i_{ds}^*})^2}} - i_{ds} \tag{16}$$

$$\varepsilon_2(\frac{\tau_r}{\tau_r^*}) = \hat{i}_{qs} - i_{qs} = i_{qs}^* \frac{(\frac{\tau_r}{\tau_r^*}) \sqrt{1 + (\frac{i_{qs}^*}{i_{ds}^*})^2}}{\sqrt{1 + (\frac{\tau_r}{\tau_r^*} \frac{i_{qs}^*}{i_{ds}^*})^2}} - i_{qs} \tag{17}$$

The total square error is a non-linear function of the ratio τ_r/τ_r^*. The aim of the neuro-fuzzy identification scheme is to minimize the total square error:

$$\text{min. } f(\frac{\tau_r}{\tau_r^*}) = \varepsilon_1^2 + \varepsilon_2^2 \tag{18}$$

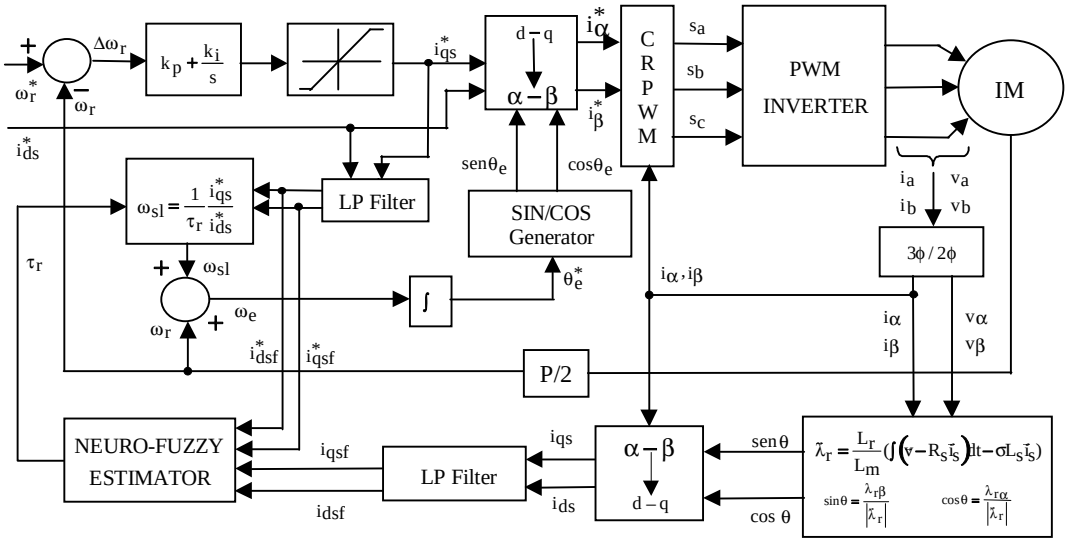

Fig. 2. Indirect field oriented control with neuro-fuzzy identification scheme block diagram.

The block diagram of the control system with the neuro-fuzzy identification scheme is shown in Fig. 2. It is important to note that even a rotor flux observer is used, the characteristics of the indirect field oriented control are maintained.

A. Fuzzy Logic Estimator

The inputs variables to the fuzzy estimator are the increment of the total square error and the last change of the ratio τ_r/τ_r^*, which are defined as follows at kth sampling interval:

$$\Delta\varepsilon(k) = \varepsilon(k) - \varepsilon(k-1) \tag{19}$$

$$L\Delta(\frac{\tau_r}{\tau_r^*})(k) = \Delta(\frac{\tau_r}{\tau_r^*})(k-1) \tag{20}$$

The output variable of the fuzzy estimator is the change step $\Delta\tau_r/\tau_r^*$, which is generated from the input variables through fuzzy inference and defuzzification. Fig. 3 shows the fuzzy estimator block diagram.

The principle of the identification process is that if the last change in the ratio τ_r/τ_r^* indicated a decreased in the total square error ε, then proceed searching in the same direction, and the new change in the ratio τ_r/τ_r^* must be proportional to the change in the total square error Δε. An example of a fuzzy rule can be given as: IF Δε is negative small (NS) and $L\Delta(\tau_r/\tau_r^*)$ is negative (N) THEN $\Delta(\tau_r/\tau_r^*)$ is negative small (NS). The membership functions for the fuzzy estimator are shown in Fig. 4, where the universe of discourse for all variables are normalized in the [-1,+1]

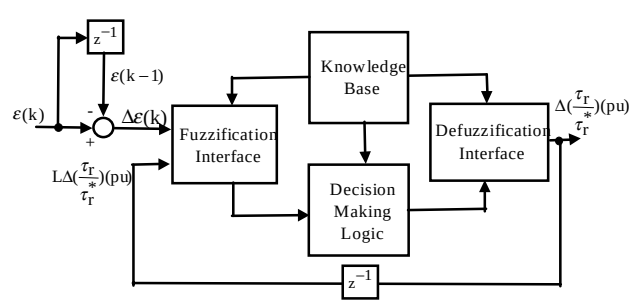

Fig. 3. Fuzzy logic estimator block diagram.

interval. The fuzzy controller rule base is given in Table I and the resulting control surface is shown in Fig. 5.

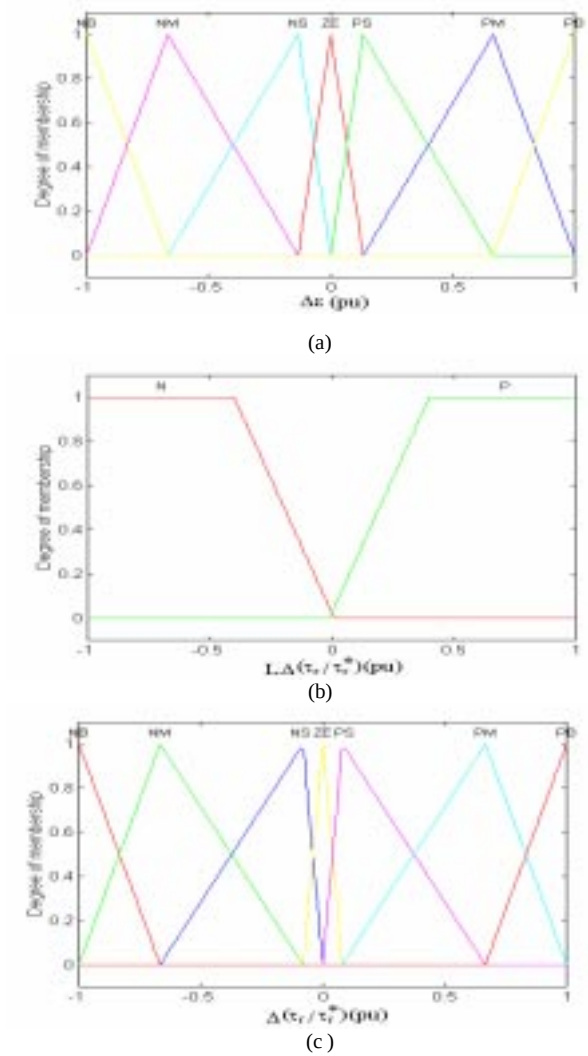

Fig. 4. Membership functions for the fuzzy controller. (a) Change of ε (Δε(pu)). (b) Last change of the ratio τ_r/τ_r^* ($L\Delta(\tau_r/\tau_r^*)$(pu)). (c) Change of the ratio τ_r/τ_r^* ($\Delta(\tau_r/\tau_r^*)$(pu)).

TABLE I
RULE BASE FOR THE FUZZY LOGIC CONTROLLER

$\Delta\varepsilon \setminus L\Delta(\tau_r/\tau_r^*)$	N	P
PB	PM	NM
PM	PS	NS
PS	PS	NS
ZE	ZE	ZE
NS	NS	PS
NM	NM	PM
NB	NB	PB

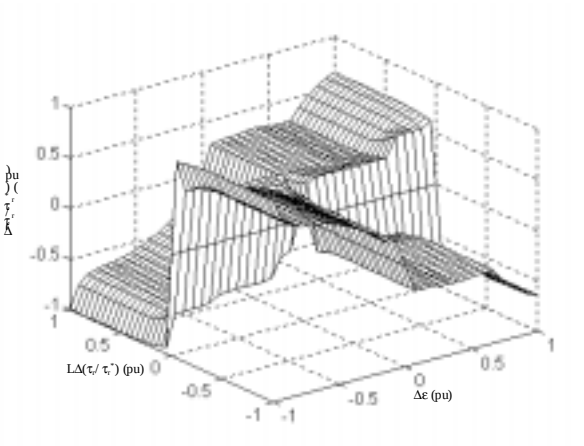

Fig. 5. Fuzzy estimator control surface.

B. Neuro-fuzzy Estimator.

Once the fuzzy estimator was developed and tuned, a dynamical feedforward neural network was then trained to emulate the fuzzy estimator. The input-output transfer characteristics of the fuzzy estimator was used to train the neural network, which then replaces the fuzzy estimator in the control system. The neuro-fuzzy estimator design is shown in Fig. 6. A standard feedforward neural network with tan-sigmoid activation functions in the hidden and output layers was used in this work. The network has three

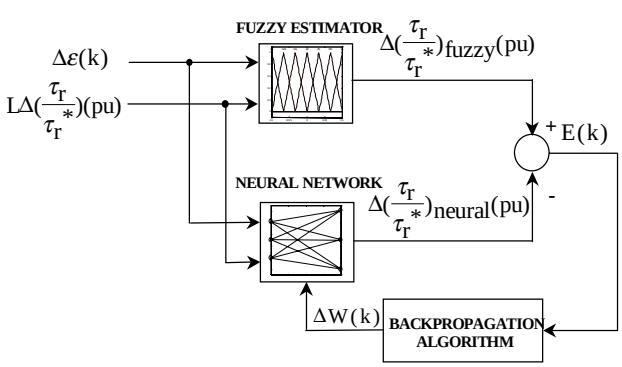

Fig. 6. Neuro-fuzzy estimator design block diagram.

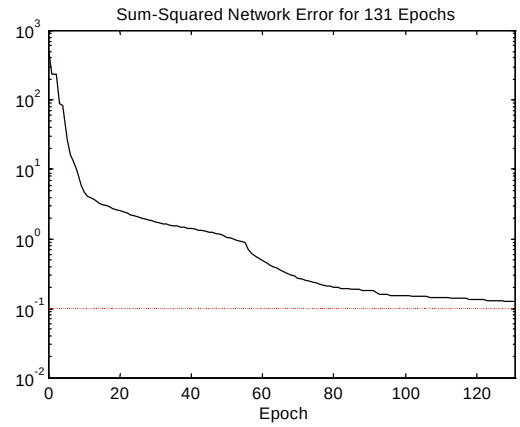

Fig. 7. Sum - squared error at the network output.

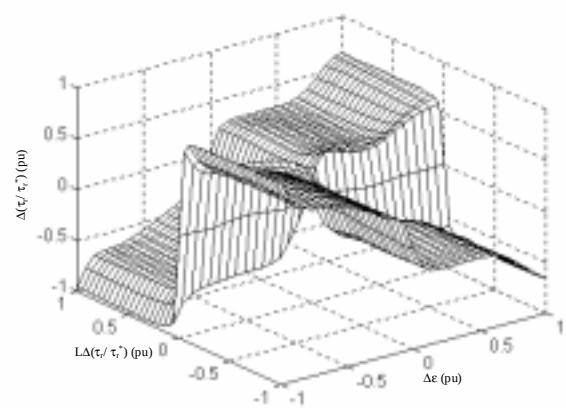

Fig. 8. Neuro-fuzzy estimator control surface

layers, i.e., input layer, hidden layer, and the output layer. The input and output layers have neurons equal to the respective number of signals, whereas the hidden layer has 20 neurons. The network was trained using the back-propagation algorithm with momentum. The initial learning rate η and the momentum gain β were set to 0.1 and 0.21 respectively. Fig. 7 show the sum of the squared error for the first 131 epoch of the training and the resulting control surface is shown in Fig. 8.

IV. SIMULATION RESULTS

To test the proposed method, the indirect field oriented control with the neuro-fuzzy identification scheme have been imulated in the following detuned conditions: 1) $R_r = 1.4\ R_r^*$ and 2) $R_r = 1.6\ R_r^*$. The load cycle for both cases is show in Fig. 9 and the reference speed was set to 2000 r.p.m. An on-off working cycle of 1.5 seconds was adopted for the operation of the neuro-fuzzy controller. Thus the controller compensates the rotor time constant for 1.5 seconds, and for the next 1.5 seconds its value is maintained. In real operation conditions the rotor time constant varies slowly as a first order system with a time constant equal to the thermal time constant of the motor and the off time of the fuzzy controller could be longer, but in the simulation study only 6 seconds have been considered.

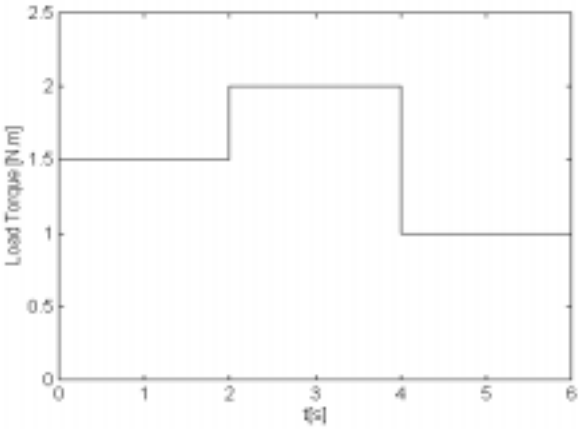

Fig. 9. Load torque cycle

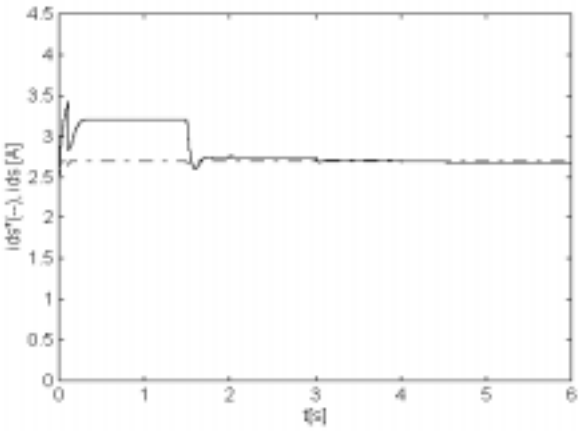

(a)

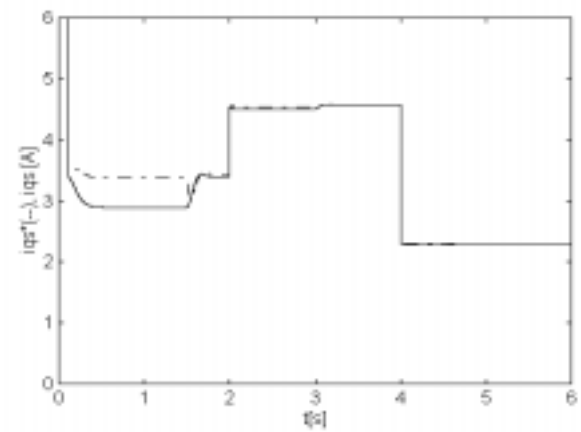

(b)

Fig. 10. Motor and commanded currents. $R_r=1.4R_r^*$. Neuro-fuzzy identification scheme is connected.

Figs. 10 and 11 show the motor and commanded currents for the two detuned conditions when the neuro-fuzzy updating scheme is put into operation. We can see the neuro-fuzzy estimator is able to minimize the difference between the motor and commanded currents and this improvement is due the better estimation of the slip frequency ω_{sl} using the estimated value of the rotor time constant τ_r at the estimator output.

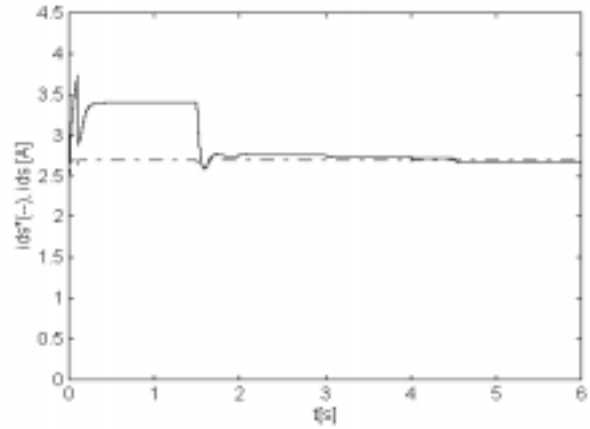

(a)

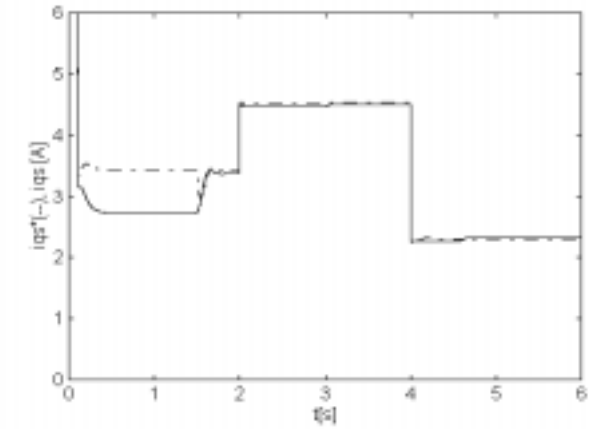

(b)

Fig. 11. Motor and commanded currents. $R_r=1.6R_r^*$. Neuro-Fuzzy identification scheme is connected.

V. CONCLUSION

A neuro-fuzzy approach for the problem of rotor time constant identification of the induction motors have been presented in this paper. The neuro-fuzzy estimation have been performed on-line based on the steady state model of the indirect field oriented control. From the simulations results, it can be appreciated that substantial improvement in the drive performance can be obtained with the fuzzy approach. Thus in steady state conditions, when the neuro-fuzzy updating scheme is connected, the motor and commanded currents are approximately equal even in strong detuning conditions. The proposed method maintain the advantages of the fuzzy control by using adaptive step size of the control variable. Besides, the neural network implementation adds the advantage of fast computation, either by a dedicated hardware chip or by digital signal processor (DSP)–based software. The overall controller is being implemented in a laboratory on a Motorola DSP56001 Digital Signal Processor.

VI. ACKNOWLEDGEMENTS

The authors would like to acknowledge the financial support provides by FAPESP (São Paulo State Foundation for Research Support–Brazil) through contract n° 96/10047-7.

APPENDIX

INDUCTION MOTOR PARAMETERS

L_s = 0.1191 H R_s=1.1771 Ω
L_m = 0.1130 H R_r =1.3820 Ω
L_r = 0.1185 H
J_m = 0.00135 Kg.m^2
B_m = 0.0008 N.m/rad/s
2-Pole, 120 V, 800 W

VII. REFERENCES

[1] R. D. Lorenz, T. A. Lipo, D. W. Novotny, "Motion control with induction motors", *Proceedings of IEEE-IAS*, vol. 82, no 8, pp. 1215-1240, August 1994.

[2] K. B. Nordin, D. W. Novotny, D. S. Zinger, "The influence of motor parameter deviations in feedforward field orientation drive systems", *IEEE Transactions on Industry Applications*, vol. IA-21, no 4, pp. 1009-1015, July/August 1985.

[3] R. D. Lorenz, "Tuning of field oriented induction motor controllers for high-performance applications", *IEEE Transactions on Industry Applications*, vol. IA-22, no 2, pp. 293-297, March/April 1986.

[4] S. K. Sul, "A novel technique of Rotor Resistance estimation considering variation of mutual inductance", *IEEE Transactions on Industry Applications*, vol. 25, no 3, pp. 578-587, July/August 1989.

[5] C. C. Chan, H. Wang, "An effective method of rotor resistance identification for high-performance induction motor vector control", *IEEE Transactions on Industrial Electronics*, vol. 37, no 6, pp. 477-482, December 1990.

[6] G. C. D. Sousa, B. K. Bose, K. S. Kim, "Fuzzy logic based on-line tuning of slip gain for an indirect vector controlled induction motor drive", in *IEEE/IECON Conf. Proc.*, pp. 1003-1008, 1993.

[7] D. Fodor, G. Griva, F. Profumo, "Compensation of parameter variations in induction motor drives using a neural network", 0-7823-2730-6 – *IEEE*, pp. 1307-1311, 1995.

[8] G. C. D. Sousa, B. K. Bose, J. G. Cleland, "A fuzzy logic based on-line efficiency optimization control of na indirect vector controlled induction motor drive", *in Proc. IEEE-IECON Conf.*, Maui, HI, pp. 1168-1174, Nov. 1993.

[9] M. G. Simões, B. K. Bose, R. J. Spiegel, "Fuzzy Logic Based Intelligent Control of a Variable Speed Cage Machine Wind Generation System", *IEEE Transactions on Power Electronics*, vol. 12, no 1, pp. 87-95, January 1997.

[10] B. K. Bose, N. R. Patel, K. Rajashekara, "A Neuro-Fuzzy-Based On-Line Efficiency Optimization Control of a Stator Flux-Oriented Direct Vector-Controlled Induction Motor Drive", *IEEE Transactions on Industrial Electronics*, vol. 44, no 2, pp. 270-273, April 1997.

[11] R. De Doncker, F. Profumo, M. Pastorelli, "Self tuning of induction motor servo drives using the universal field oriented controller", *IEEE Transactions on Power Electronics*, vol. 9, no 4, pp. 357-366, July 1990.