# USING ACTIVE POWER FILTERS TO IMPROVE POWER QUALITY

Luis A. Morán[(1)] Juan W. Dixon[(2)] José R. Espinoza[(1)] Rogel R. Wallace[(1)]

[(1)] Departamento de Ing. Eléctrica
Universidad de Concepción
Concepción - CHILE
lmoran@manet.die.udec.cl

[(2)] Departamento de Ing. Eléctrica
Universidad Católica de Chile
Santiago - Chile
jdixon@ing.puc.cl

**Abstract.** This paper describes different power quality problems in distribution systems and their solutions with power electronics based equipment. Shunt, hybrid and series active power filters are described showing their compensation characteristics and principles of operation. Different power circuits topologies and control scheme for each type of active power filter are analyzed. The compensation characteristics of each topology with the respective control scheme are proved by simulation and experimentally.

## I. - INTRODUCTION

The proliferation of microelectronics processors in a wide range of equipments, from home VCRs and digital clocks to automated industrial assembly lines and hospital diagnostics systems, has increased the vulnerability of such equipment to power quality problems [1]. These problems include a variety of electrical disturbances, which may originate in several ways and have different effects on various kinds of sensitive loads. What were once considered minor variations in power, usually unnoticed in the operation of conventional equipment, may now bring whole factories to standstill. As a result of this vulnerability, increasing numbers of industrial and commercial facilities are trying to protect themselves by investing in more sophisticate equipment to improve power quality [2]. Moreover, the proliferation of non-linear loads with large rated power has increased the contamination level in voltages and currents waveforms, forcing to improve the compensation characteristics required to satisfy more stringent harmonics standard [3], [4].

Between the different technical options available to improve power quality, active power filters have proved to be an important alternative to compensate for current and voltage disturbances in power distribution systems [5], [6], [7]. Different active power filters topologies have been presented in the technical literature, [8] [9] and many of them are already available in the market [1], [2]. This paper will focus in the analysis of which to use with their compensation characteristics. Shunt active power filters, series active topologies, and hybrid schemes will be presented and analyzed. The control scheme characteristics for shunt and series schemes will also be discussed. Finally, steady state and transient results for dynamic compensation, obtained from simulated and experimental setup will be presented.

## II. - POWER QUALITY IN POWER DISTRIBUTION SYSTEMS

Most of the more important international standards define power quality as the physical characteristics of the electrical supply provided under normal operating conditions that do not disrupt or disturb the customer's processes. Therefore, a power quality problem exists if any voltage, current or frequency deviation results in a failure or in a bad operation of customer's equipment. However, it is important to notice that the quality of power supply implies basically voltage quality and supply reliability. Voltage quality problems relates to any failure of equipment due to deviations of the line voltage from its nominal characteristics, and the supply reliability is characterized by its adequacy (ability to supply the load), security (ability to withstand sudden disturbances such as system faults) and availability (focusing especially on long interruptions).

Power quality problems are common in most of commercial, industrial and utility networks. Natural phenomena, such as lightning are the most frequent cause of power quality problems. Switching phenomena resulting in oscillatory transients in the electrical supply, for example when capacitors are switched, also contribute substantially to power quality disturbances. Also, the connection of high power non-linear loads contributes to the generation of current and voltage harmonic components. Between the different voltage disturbances

that can be produced, the most significant and critical power quality problems are voltage sags due to the high economical losses that can be generated. Short-term voltage drops (sags) can trip electrical drives or more sensitive equipment, leading to costly interruptions of production [10].

For all these reasons, from the consumer point of view, power quality issues will become an increasingly important factor to consider in order to satisfy good productivity. On the other hand, for the electrical supply industry, the quality of power delivered will be one of the distinguishing factor for ensuring customer loyalty in this very competitive and deregulated market. To address the needs of energy consumers trying to improve productivity through the reduction of power quality related process stoppages and energy suppliers trying to maximize operating profits while keeping customers satisfied with supply quality, innovative technology provides the key to cost-effective power quality enhancements solutions. However, with the various power quality solutions available, the obvious question for a consumer or utility facing a particular power quality problem is which equipment provides the better solution.

## III .- SOLUTIONS TO POWER QUALITY PROBLEMS

There are two approaches to the mitigation of power quality problems. The first approach is called load conditioning, which ensures that the equipment is less sensitive to power disturbances, allowing the operation even under significant voltage distortion. The other solution is to install line conditioning systems that suppress or counteracts the power system disturbances.

A flexible and versatile solution to voltage quality problems is offered by active power filters. Currently they are based on PWM converters and connect to low and medium voltage distribution system in shunt or in series. Series active power filters must operate in conjunction with shunt passive filters in order to compensate load current harmonics. Shunt active power filters operate as a controllable current source and series active power filters operates as a controllable voltage source. Both schemes are implemented preferable with voltage source PWM inverters, with a dc bus having a reactive element such as a capacitor. Active power filters can perform one or more of the functions required to compensate power systems and improving power quality. As it will be illustrated in this paper, their performance depend on the power rating and the speed of response. The selection of the type of active power filter to improve power quality depends on the source of the problem as can be seen in Table 1.

**TABLE I**
**Active Filter Solutions to Power Quality Problems**

| *Active Filter Connection* | *Load on AC Supply* | *AC Supply on Load* |
|---|---|---|
| ***Shunt*** | -Current Harmonic Filtering.<br>-Reactive current compensation.<br>-Current unbalance.<br>-Voltage Flicker. | |
| ***Series*** | -Current harmonic filtering.<br>-Reactive current compensation.<br>-Current unbalance.<br>-Voltage Flicker.<br>-Voltage unbalance. | -Voltaje sag/swell.<br>-Voltaje unbalance.<br>-Voltaje distortion.<br>-Voltaje interruption.<br>-Voltaje flicker.<br>-Voltaje notching. |

## IV.- SHUNT ACTIVE POWER FILTERS

Shunt active power filter compensate current harmonics by injecting equal-but-opposite harmonic compensating current. In this case the shunt active power filter operates as a current source injecting the harmonic components generated by the load but phase shifted by $180^o$. This principle is applicable to any type of load considered a harmonic source. Moreover, with an appropriate control scheme, the active power filter can also compensate the load power factor. In this way, the power distribution system sees the non linear load and the active power filter as an ideal resistor. The current compensation characteristic of the shunt active power filter is shown in Fig.1.

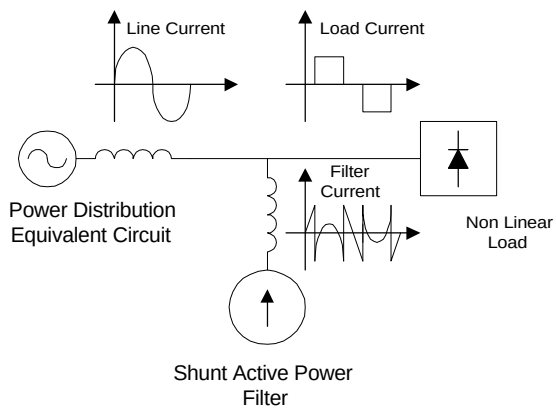


Fig. 1.- Compensation characteristics of a shunt active power filter

## 4.1.- Power Circuit Topology

Shunt active power filters are normally implemented with pulse-width modulated voltage source inverters. In this type of applications, the PWM-VSI operates as a current controlled voltage source. Traditionally, 2 level PWM-VSI have been used to implement such system. However, in the past years multilevel PWM voltage source inverters have been proposed to develop active power filters for medium voltage applications. Also, active power filters implemented with multiple VSI connected in parallel to a dc bus but in series through a transformer or in cascade has been proposed in the technical literature.

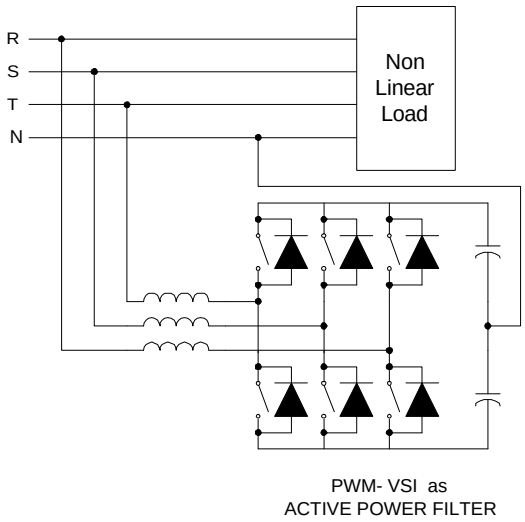


Fig. 2- Shunt active power filter topologies implemented with PWM voltage-source inverters.

The use of VSI connected in cascade is an interesting alternative to compensate high power non-linear load. The use of two PWM-VSI of different rated power allows the use of different switching frequencies, reducing switching stresses and commutation losses in the overall compensation system.

In recent years, there has been an increasing interest in using multilevel inverters for high power energy conversion, especially for drives and reactive power compensation. Multilevel PWM inverters can be connected to high voltage source without a coupling transformer. The use of neutral-point-clamped (NPC) inverters allows equal voltage shearing of the series connected devices in each phase. However, the neutral point potential deviates, resulting in an excess voltage stress to either the upper or lower set of devices.

Basically, multilevel inverters have been developed for applications in high voltage ac motor drives and static var compensation. For these types of applications, the output voltage of the multilevel inverter must be able to generate an almost sinusoidal output current. In order to generate a near sinusoidal output current, the output voltage should not contain low frequency harmonic components.

For active power filter applications the three levels NPC inverter output voltage must be able to generate an output current that follows the respective reference current which contain the harmonic and reactive component required by the load. The power circuit topology of an active power filter implemented with a Neutral-Point-Clamped voltage-source inverter is shown in Fig. 3. The three levels NPC voltage-source inverter is connected in parallel through a link reactor to the power distribution system.

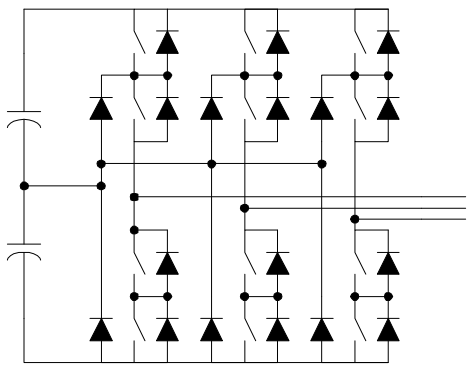

Fig. 3. An active power filter implemented with a three-level NPC voltage-source inverter.

## 4.2.- Control Scheme

The block diagram of a shunt active power filter control scheme is shown in Fig. 4 and consists of a current reference generator, a dc voltage control and the inverter gating signals generator.

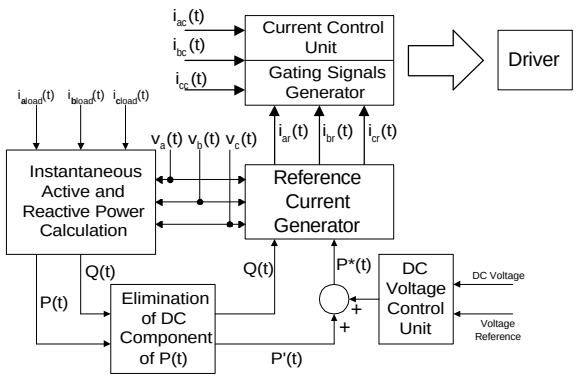


Fig. 4.- The block diagram of a shunt active power filter control scheme.

The current reference circuit generates the reference currents required to compensate the load current harmonics and reactive power, and also try to maintain constant the dc voltage across the two electrolytic capacitors. There are many possibilities to develop this type of control [5], [6]. Also, the compensation effectiveness of an active power filter depends on its ability to follow with a minimum error and time delay the reference signal calculated to compensated the distorted load current. Finally, the dc voltage control unit must keep the total dc bus voltage constant and equals to a given reference value. The dc voltage control is achieved by adjusting the small amount of real power absorbed by the inverter. This small amount of real power is adjusted by changing the amplitude of the fundamental component of the reference current (Fig. 4).

## V.- SERIES ACTIVE POWER FILTERS

It is well known that series active power filters compensate current system distortion caused by non-linear loads by imposing a high impedance path to the current harmonics which forces the high frequency currents to flow through the LC passive filter connected in parallel to the load [5]. The high impedance imposed by the series active power filter is created by generating a voltage of the same frequency that the current harmonic component that needs to be eliminated. Voltage unbalance is corrected by compensating the fundamental frequency negative and zero sequence voltage components of the system.

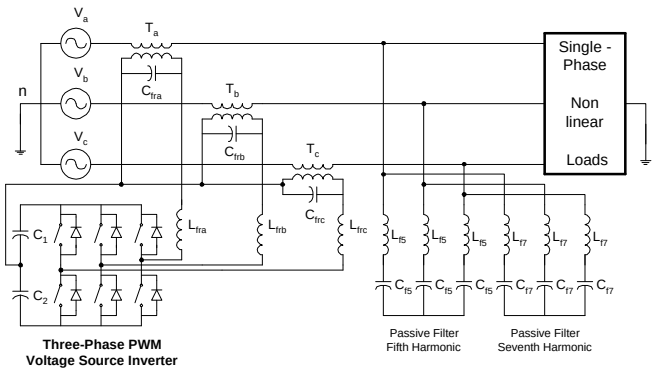


Fig. 5. The proposed series active power filter topology.

### 5.1.- Control Scheme

The block diagram of the proposed control scheme is shown in Fig. 6. Current and voltage reference waveforms are obtained by using the Instantaneous Reactive Power Theory. Voltage unbalance is compensated by calculating the negative and zero sequence fundamental components of the system voltages. These voltage components are added to the source voltages through the series transformers compensating the voltage unbalance at the load terminals. In order to reduce the amplitude of the current flowing through the neutral conductor, the zero sequence components of the line currents are calculated. In this way, it is not necessary to sense the current flowing through the neutral conductor.

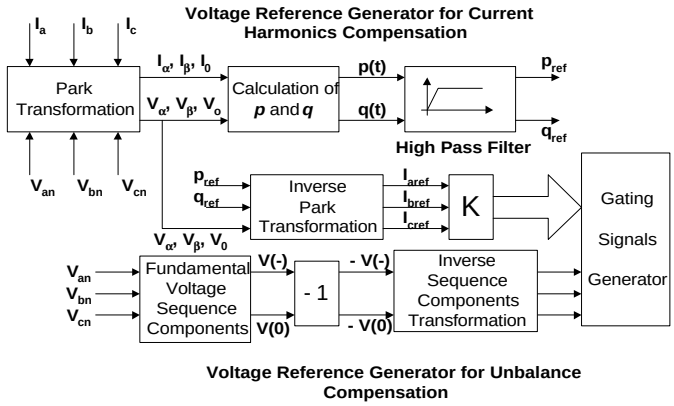


Fig. 6. The block diagram of the proposed series active power filter control scheme.

where $p_{ref}$ and $q_{ref}$ are the instantaneous active and reactive power associated with harmonics current components.

### 5.2.- Reference Signals Generator

The compensation characteristics of the series active power filter are defined mainly by the algorithm used to generate the reference signals required by the control system. These reference signals must allow current and voltage compensation with minimum time delay. Also it is important that the accuracy of the information contained in the reference signals allows the elimination of the current harmonics and voltage unbalance presents in the power system. Since the voltage and current control scheme are independent, the equations used to calculate the voltage reference signals are the following:

$$\begin{pmatrix} \mathbf{v_{a0}} \\ \mathbf{v_{a1}} \\ \mathbf{v_{a2}} \end{pmatrix} = \frac{1}{\sqrt{3}} \begin{pmatrix} 1 & 1 & 1 \\ 1 & a & a^2 \\ 1 & a^2 & a \end{pmatrix} \cdot \begin{pmatrix} \mathbf{v_a} \\ \mathbf{v_b} \\ \mathbf{v_c} \end{pmatrix} \tag{1}$$

The voltages $\mathbf{v_a}$, $\mathbf{v_b}$, and $\mathbf{v_c}$ correspond to the phase to neutral voltages before the series transformer (Fig. 5). The reference voltage signals are obtained by making the positive sequence component, $\mathbf{v_{a1}}$, zero and then applying the inverse of the Fortescue transformation. In this way the series active power filter compensates only voltage unbalance and not voltage regulation. The reference signals for the voltage unbalance control scheme are obtained by applying the following equations:

$$\begin{pmatrix} \mathbf{v_{refa}} \\ \mathbf{v_{refb}} \\ \mathbf{v_{refc}} \end{pmatrix} = \frac{\mathbf{1}}{\sqrt{\mathbf{3}}} \begin{pmatrix} \mathbf{1} & \mathbf{1} & \mathbf{1} \\ \mathbf{1} & \mathbf{a^2} & \mathbf{a} \\ \mathbf{1} & \mathbf{a} & \mathbf{a^2} \end{pmatrix} \cdot \begin{pmatrix} -\mathbf{v_{a0}} \\ \mathbf{0} \\ -\mathbf{v_{a2}} \end{pmatrix} \tag{2}$$

In order to compensate current harmonics generated by the non linear loads, the following equations are used (Fig. 7):

$$\begin{pmatrix} i_{aref} \\ i_{bref} \\ i_{cref} \end{pmatrix} = \sqrt{\frac{2}{3}} \begin{pmatrix} 1 & 0 \\ -1/2 & \sqrt{3}/2 \\ -1/2 & -\sqrt{3}/2 \end{pmatrix} \begin{pmatrix} v_a & v_b \\ -v_b & v_a \end{pmatrix}^{-1} \begin{pmatrix} p_{ref} \\ q_{ref} \end{pmatrix} + \frac{1}{\sqrt{3}} \begin{pmatrix} i_0 \\ i_0 \\ i_0 \end{pmatrix} \tag{3}$$

where $i_0$ is the fundamental zero sequence component of the line current and is calculated using the Fortescue transformation (4).

$$i_0 = \frac{1}{\sqrt{3}} \left( i_a + i_b + i_c \right) \tag{4}$$

In (3) $\mathbf{p_{ref}}$, $\mathbf{q_{ref}}$, $\mathbf{v_\alpha}$, and $\mathbf{v_\beta}$ are defined according with the instantaneous reactive power theory [5]. The zero sequence fundamental component of the line currents are generated by the source voltage unbalance. Since the system voltage unbalance is eliminated by compensating the negative and zero sequence components present in the source voltage, the magnitude of the fundamental component of the line currents are significantly reduced, and therefore they need not to be compensated by the current control scheme. For this reason, the fundamental component of $i_0$ from equation (3) is filtered, leaving only the zero sequence harmonic components of $i_0$ ($i_{0ref}$), which need to be eliminated from the source line current. Finally, the general equation that defines the references of the PWM voltage-source inverter required to compensate voltage unbalance and current harmonics is the following:

$$\begin{pmatrix} v_{refa} \\ v_{refb} \\ v_{refc} \end{pmatrix} = K_1 \left[ \sqrt{\frac{2}{3}} \begin{pmatrix} 1 & 0 \\ -1/2 & \sqrt{3}/2 \\ -1/2 & -\sqrt{3}/2 \end{pmatrix} \begin{pmatrix} v_a & v_b \\ -v_b & v_a \end{pmatrix}^{-1} \begin{pmatrix} p_{ref} \\ q_{ref} \end{pmatrix} + \frac{1}{\sqrt{3}} \begin{pmatrix} i_{0ref} \\ i_{0ref} \\ i_{0ref} \end{pmatrix} \right] + K_2 \left[ \frac{1}{\sqrt{3}} \begin{pmatrix} 1 & 1 & 1 \\ 1 & a^2 & a \\ 1 & a & a^2 \end{pmatrix} \begin{pmatrix} -v_{ao} \\ 0 \\ -v_{a2} \end{pmatrix} \right] \tag{5}$$

where $K_1$ is the gain of the series transformer which defines the magnitude of the impedance for high frequency current components, and $K_2$ defines the degree of compensation for voltage unbalance, ideally $K_2$ equals to 1. Also, $i_{0ref} = i_0 - i_{01}$, where $i_{01}$ is the fundamental component of $i_0$. The block diagram of the control scheme that generates (5) is shown in Fig. 7. It is important to note that the references signals calculated with (5) allow the flow of only reactive power between the series active power filter and the compensated power system. In order to compensate voltage regulation, the positive sequence component of the line voltages must be included in (5). The compensation of voltage regulation requires to generate active power from the active power filter to the power system. Since there is no active power storage element in this topology, this function cannot be achieved with the proposed scheme.

5.3.- Gating Signals Generator

This circuit provides the gating signals of the three-phase PWM voltage-source inverter required to compensate voltage unbalance and current harmonic components. The current and voltage reference signals are added and then the amplitude of the resultant reference waveform is adjusted in order to increase the voltage utilization factor of the PWM inverter for steady state operating conditions. The gating signals of the inverter are generated by comparing the resultant reference signal with a fixed frequency triangular waveform (5 kHz). The triangular waveform forces the inverter switching frequency to be constant.

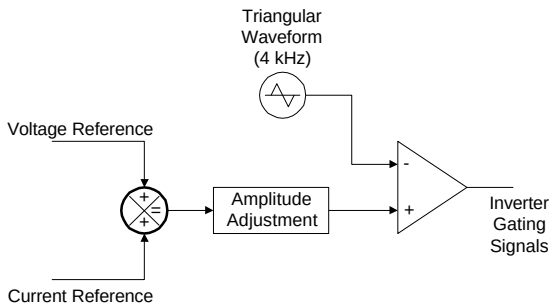


Fig. 7. The block diagram of the proposed gating signals generator.

The higher voltage utilization of the inverter is obtained if the amplitude of the resultant reference signal is adjusted for the steady state operating condition of the series active power filter. In this case, the reference current and reference voltage waveforms are smaller. If the amplitude is adjusted for transient operating conditions, the required reference signals will have a larger value, which will create a higher dc voltage in the inverter thus defining a lower voltage utilization factor for steady state operating conditions.

5.4.- Simulated Results

The viability of the proposed series active power filter has been verified by simulation using PSpice. Relevant results are shown in Figs. 8, 9, and 10. In particular, Fig. 8 shows the effect of voltage compensation with the current harmonic generator circuit not working, while in Fig. 9, only the current harmonic compensator scheme is operating. In Fig. 10 the series active power filter is compensating voltage unbalances and current harmonic components simultaneously. The simulation circuit is compensating three single phase non controlled rectifiers, each one connected between phase to

neutral. The series active power filter starts compensating at 140 ms.

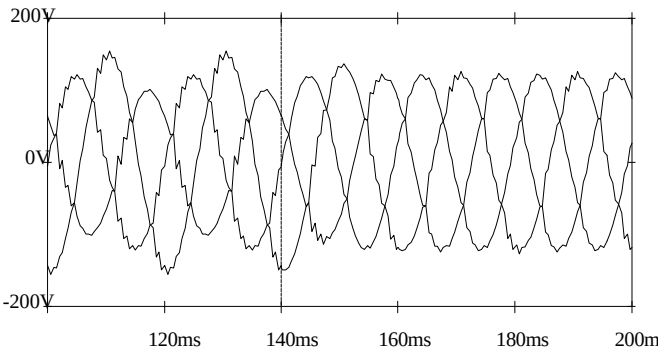


Fig. 8. Simulated waveforms for voltage unbalance compensation. Phase to neutral voltages at the load terminals before and after series compensation. (Current harmonic compensator not operating).

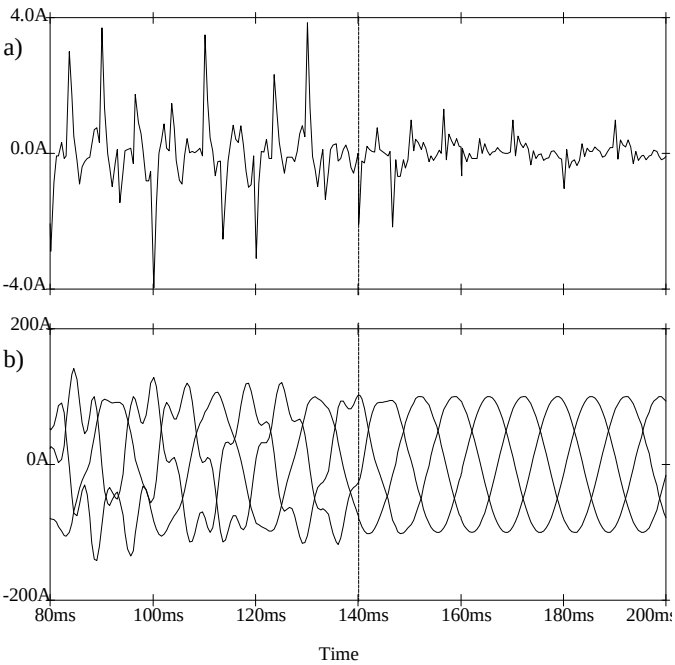


Fig. 9. Simulated waveforms for current harmonic compensation. a) Neutral current flowing to the ac mains before and after compensation. b) Line currents flowing to the ac mains before and after compensation. (Voltage unbalance compensator not operating).

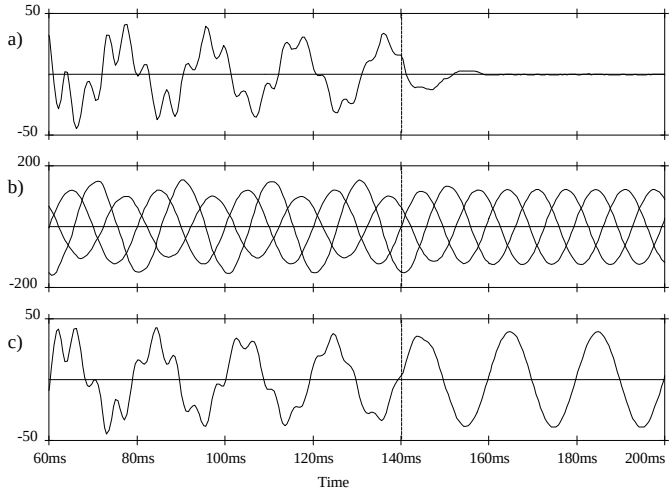


Fig. 10. Simulated results for voltage unbalance and current harmonic compensation, before and after compensation. a) Ac mains neutral current. b) Phase to neutral load voltages. c) Ac source line current.

## 5.5.- Experimental Results

In order to validate the compensation scheme proposed in this paper, a 5 kVA prototype was implemented and tested for different operating conditions. Figure 11 shows the current waveforms when the series active power filter is not working. Specially Fig. 11-a shows the load current , 11-b illustrates the current that flows to the passive filter and Fig 11-c shows the power system. The passive LC filter was tuned at 250 Hz ($L_{f5}$=6,22 mH ; $C_{f5}$=65 µF) and 350 Hz ($L_{f7}$=3,17 mH ; $C_{f7}$=32 µF). Figure 12 shows the effectiveness of the series active power filter, which can be observed in Fig. 12-c, that shows the current that flows to the power source. Also this figure shows that the THD of the passive filter current increases while the THD of the source current decreases due to the compensation characteristics of the proposed series active power filter.

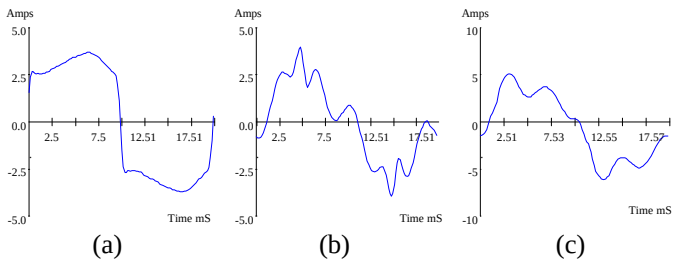


Fig. 11. Experimental current waveforms of the system without the operation of the series active power filter. (a) Load current. (b) Shunt passive filter current. (c) System current.

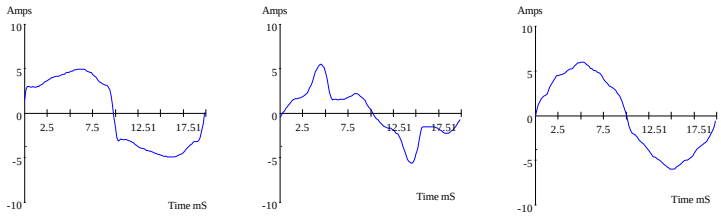


(a) (b) (c)

Fig. 12. Experimental current waveforms with the operation of the proposed series active power filter. (a) Load current. (b) Shunt passive filter current. (c) System current.

## VI.- HYBRID ACTIVE POWER FILTER

Active power filters can be used with passive filters improving compensation characteristics of the passive filter, and avoiding the possibility of the generation of series or parallel resonance. One example of this combination is the series active power filter shown in section V. In this scheme, (Fig. 5), if the passive filters are not connected, the series active power filter can compensate only voltage regulation, and voltage unbalance. If passive filters are not used in Fig. 5, the topology can not compensate current harmonic components.

Another possibility to combine the compensation characteristics of passive and active power filters is by connecting the active passive filter in series with the passive one, as shown in Fig. 13. In this way, the compensation characteristics of the passive filter is significantly improved, since the active scheme generated voltage harmonic components across the terminal of the primary windings of the series transformer, forcing current harmonics generated by the load to circulate through the passive filter instead of the power distribution system.

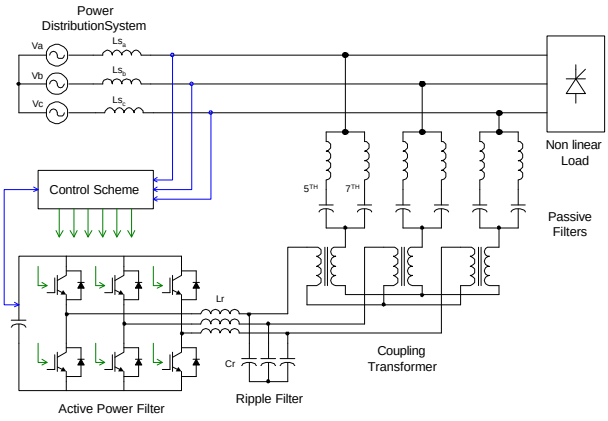


Fig. 13. The hybrid active power filter configuration.

By controlling the amplitude of the voltage fundamental component across the coupling transformer, the power factor of the power distribution system can be adjusted. However, the control of the load power factor imposed a higher voltage across the filter capacitor. This consideration has to be considered when the filter capacitor are specified. This type of configuration is very convenient for compensation of high power medium voltage non linear loads, such as large power ac drives with cycloconverters or high power medium voltage rectifiers for application in electrowining process or for compensation of arc furnace. In all these applications passive filters do not have enough compensation capability to reduce current harmonics in order to satisfy IEEE Std.519. Simulated waveforms for this type of compensation are shown in Figs. 14.

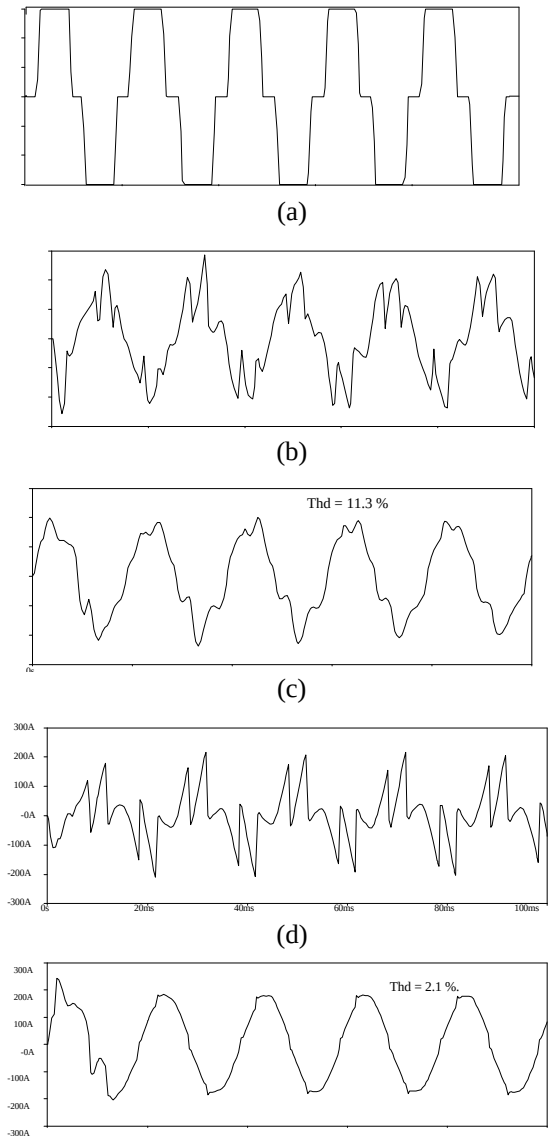


Fig. 14. Simulated results for hybrid active power filter operation. (a) Load Current. (b) Passive filter current. (c) System Current. (d) Passive Filter current. (e) System current.

In the previous figures simulated results shown in (a), (b) and (c) correspond to the operation without the series active power filter. In this case the total harmonic distortion of the system current is 11.3 %, proving that the passive filter can not compensate all the current harmonics. In Figures (d) and (e) the series active power filter is operating. Figure (e) shows that the THD of the system current is reduced to 2.1 %.

## VII.- INSTALLATION AND OPERATING EXPERIENCE

### 7.1.- Active Power Filter Market

Many different electrical companies are offering power line conditioner or active power filter equipment to compensate power quality problems. Based on state of the art power electronic technology, they have developed different system to compensates not only current harmonic, but also flicker compensation and voltage regulation. Specially Siemens, ABB, Hitachi, Fuji and many other companies are offering power line conditioners to improve power quality. These power line conditioners are based in shunt active power filter and series active power filter topologies. Specially Siemens has developed both approaches as well as ABB.

Currently active power line conditioner are typically based on IGBT or GTO thyristors voltage source PWM-converters and connected to low and medium voltage distribution systems in shunt, series or both at the same time. In comparison to conventional passive LC filters, active power filters offer very fast control response and more flexibility in defining the required control tasks for a particular application. Some of the active power filters available in the market and in use to compensate power disturbance problems are described below.

The selection of equipment for improvement of power quality depends on the source of the problem. In case of the Siemens Power Conditioner (SIPCON), which is based on standard IGBT drive-converters, the series-connected Power Conditioner, also called Dynamic Voltage Regulator, (DVR) is most preferable to protect the consumer from supply voltage disturbances. However, if the objective is to reduce the network perturbations due to distorted load currents the shunt-connection (also called DSTATCOM), is more appropriate.

Many shunt active filter consisting of PWM inverters using IGBTs or GTO Thyristors have been operating properly in Japan, with a rating capacity which ranges from 10 kVA to several MVA. Fuji Electric has developed and introduced in the market shunt active power filters with rated power between 50 and 400 kVA for low voltage application. For a specific application, Toshiba has developed a shunt active power filter based on three voltage fed PWM inverters using GTO thyristors, each of which is rated at 16 MVA. The three active power filters are used to compensate the fluctuating reactive current and negative sequence current component generated by the Japanese “bullet” trains. In this case, the purpose of the shunt active power filters with a total rating power of 48 MVA is to compensate for voltage regulation, voltage variation and unbalance at the terminals of the 154 kV power system to improve the power quality. In this particular application, the active filters are effective in compensating not only voltage regulation, but also in reducing the voltage unbalance from 3.6 % to 1 %. Also, CEGELEC has developed shunt active power filters based on GTO voltage source inverters. The use of such system developed by Cegelec in collaboration with Electricite de France (EDF’s) R&D Group, is to control interference in the Paris mass transit authority network, which was caused by the 15 kV busbar. In this case, by using a GTO active power filter, the general harmonic distortion in the current was reduced from 5.8 % to 2 %.

Another Japanese company named Meiden, has developed the Multi-Functional Active Filter, also based on voltage-fed PWM IGBTs inverters. This is a shunt active power filter designed to compensate current harmonics, power factor and voltage regulation. Current harmonic compensation is possible from the second component to the 25th. The rated power of the different models range between 50 to 1000 kVA. The standard specifications of these active power filters are the followings:

- *Number of phases*: 3-phase and three wires.
- *Input voltage*: 200, 210, 220 $\pm$ 10%, 400, 420, 440 $\pm$ 10 %, 6600 $\pm$ 10 %.
- *Frequency*: 50/60 Hz $\pm$ 5 %.
- *Nos. of restraint harmonic orders*: 2 to 25 th.
- *Harmonic restraint factor*: 85 % or more at the rated output.
- *Type of rating*: continuos.
- *Response*: 1 ms or less.

For this active power filter the harmonic restraint factor is defined as $(1 - \frac{\mathbf{I_{H2}}}{\mathbf{I_{H1}}})$ x 100 %, where $\boldsymbol{I_{H1}}$ are the harmonic currents flowing on the source side when no measure are taken for harmonic suppression, and $\boldsymbol{I_{H2}}$ are the harmonic currents flowing on the source side when harmonics are suppressed using an active filter.

Current Technology Inc. has developed the Harmonix HX3-100 a shunt active power filter designed to compensate tripplen harmonics generated by single-phase non linear loads These zero sequence current components flow through the neutral conductor of the power distribution system. This equipment is able to cancel up to 100 A of zero-sequence harmonics from a three-phase four-wire distribution system. Technical reports show that the cancellation effectiveness of this active power filter is equal to 94.4 %, that means that the active power filter is able to reduce the rms neutral current from 99.1 A to 6.82 A.

Mitsubishi Electric developed the MELACT-1100 Series of three-phase active power filters with rated power from 50 to 400 kVA in for three-phase application in 220, 440, and 6600 Volts. The absorption capabilities of harmonics is up to the 25 th order. Between 1986 and 1993, Mitsubishi reports the construction and implementation of more 100 active power filters in Japan, with rated power below 1000 kVA, for application in low and medium voltage. Also, Mitsubishi developed the Compact Statcom, similar to a synchronous condenser, that provides reactive power compensation to solve a variety of power system and industrial system voltage fluctuations and stability conditions. The Statcom consists of a self-controlled dc voltage source, and self commutated inverters using GTO thyristors. Mitsubishi Electric developed the worlds first static compensator in 1991 rated 154 kV and 80 MVA. It was installed on an actual power system at the Inuyama switching substation of the Kansai Electric Power Co. in Japan and continues to operate today.

ABB has also been developing active power filters to improve voltage regulation and unbalances in power systems. The approach developed by ABB is based in both shunt and series active power filters implemented with IGCT based voltage source PWM inverters. The series active power filter is designed for voltage compensation, while the shunt approach is more oriented to current compensation. The series active power filter is called Dynamic Voltage Regulator (DVR), while the shunt scheme is named Distribution Static Synchronous Compensator (DSTATCOM) and both equipment are design to compensate reactive power, in order to improve voltage regulation. The DSTATCOM can also operate in conjunction with a solid state circuit breaker (SSCB) and with a Battery Energy Storage System (BESS). In this case this scheme operates as a high power UPS, compensating outage of voltage.

### 7.2.- Active Power Filter Under Transient Operating Conditions

Normally, active power filter have been tested and proved under steady state operating conditions in a laboratory environment. However, the use of this equipment in a real power distribution system, impose more severe stresses due to the dynamic operation of the system. The new scenario will include operation under voltage unbalance or voltage distortion, which may affect the control scheme, specially the block used to calculate the reference signal. Also, transient overvoltages generated by the operation of circuit breaker could affect the stability of the dc voltage, imposing severe overvoltages to the semiconductor switches. The operation of shunt active power filter under different operating conditions are shown in the following sections.

#### *i) Operating conditions under source voltage unbalanced*

Voltage unbalance in the power supply generates a second order voltage harmonic across the inverter dc bus voltage. This second order harmonic in the dc voltage generates a second order current harmonics, which amplitude depends on the value of the electrolytic capacitance of C. The second order harmonic in the dc current is reflected to the ac side of the inverter as a third harmonic decreasing the compensation characteristics of the shunt active power filter. The different effects of this voltage unbalance are shown in the following figures.

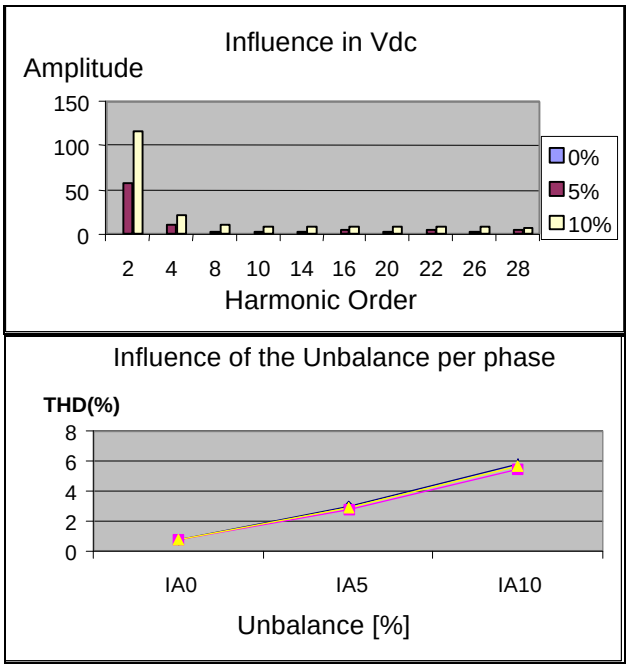


Fig. 15.- Influence of ac voltage unbalance in filter behavior. (a) Inlfluence of the ac voltage unbalance in the inverter dc voltage. (b) Influence of the voltage unbalance in the inverter THD current.

### *ii) Operating conditions with one phase in open circuit*

When power distribution system are protected with fuses it is possible that the system operates with only two phases with power and the other in open phase. This is the maximum unbalance that can be presented in the power distribution system. Under this extreme operating conditions the current and voltages generated by the shunt active power filter are shown in the following figures.

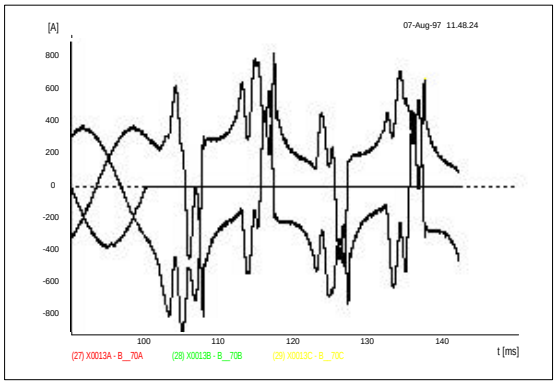


(a)

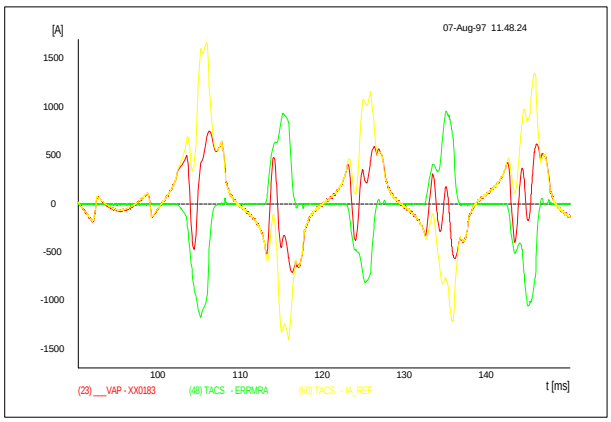


(b)

Fig. 16. Operating conditions with one phase in open circuit. (a) Current flowing through the power distribution system. (b) Current generated by the active power filter, reference signal, error signal.

This figures show that with one phase in open loop the active power filter can not compensate the load current any more. This is due to the excessive amplitude of the third current harmonic generated by the non linear load, which increases the amount of energy required by the active power filter. This increases the amplitude of the active power filter current.

### *iii) Operating condition with distorted supply voltages*

The presence of harmonic components in the supply voltages affect the generation of the reference signals, specially if the instantaneous reactive power concept is used. In order to avoid the influence of distorted voltage in the calculation of the reference signals, the supply voltage must be filter before using the signals in the control scheme. The filter used will introduce time delay and attenuation in the output signals. The attenuation can be compensated easily, but the time delay can be treated as special phase shift introduced in the matrix transformation, as shown in following equation:

$$\begin{bmatrix} V_a \\ V_b \\ V_c \end{bmatrix} = \sqrt{\frac{2}{3}} \cdot \begin{bmatrix} \cos\delta & -\operatorname{sen}\delta \\ -\frac{1}{2}\cos\delta + \frac{\sqrt{3}}{2}\operatorname{sen}\delta & \frac{1}{2}\operatorname{sen}\delta + \frac{\sqrt{3}}{2}\cos\delta \\ -\frac{1}{2}\cos\delta - \frac{\sqrt{3}}{2}\operatorname{sen}\delta & \frac{1}{2}\operatorname{sen}\delta + \frac{\sqrt{3}}{2}\cos\delta \end{bmatrix} \cdot \begin{bmatrix} V_\alpha \\ V_\beta \end{bmatrix} \tag{6}$$

where $\delta$ represents the phase shift angle introduced in the voltage output signal by the filter. Simulated results prove that for small phase shift angles (below $18^o$) introduced by the voltage filter do not affect significantly the compensation characteristics of the filter as shown in Fig. 17. The influence of $\delta$ in the filter behavior affects the current reference signal required by the filter to compensate current harmonics generated by the non linear loads.

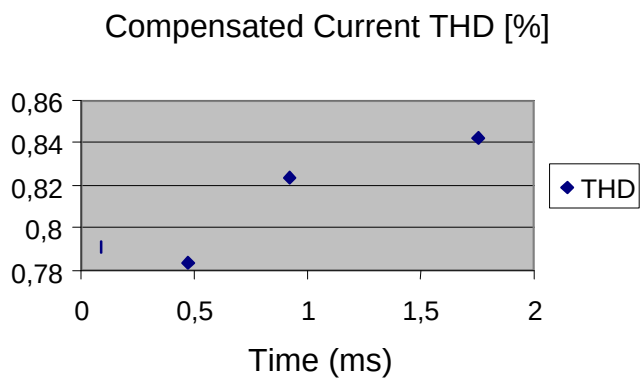


Fig. 17. Influence of the $\delta$ phase shift angle in the compensated source current.

## VII.- CONCLUSION

In this paper the use and advantages of applying active power filters to compensation power distribution systems has been presented. The principles of operation of shunt, series, and hybrid active power filters has been presented. Alos, a brief description of the state of the art in the active power filter market has been described. The shunt active power filter performance under fault power distribution system was discussed. Simulation and experimental results proved the viability of using active power filters to compensate active

power filters.


## ACKNOWLEDGMENT

The authors would like to acknowledge the financial support from “FONDECYT” through the 1990413 project.


## REFERENCES


[1] K. Eichert, T. Mangold, M. Weinhold, “Power Quality Issues and their Solution”, *in VII Seminario de Electrónica de Potencia*, Valparaíso, Chile, Abril 1999.

[2] M. Rahmani, A. Arora, R. Pfister, P. Huencho, “State of the Art Power Quality Devices and Innovative Concepts”, *in VII Seminario de Electrónica de Potencia*, Valparaíso, Chile, Abril 1999.

[3] J. K. Phipps, J.P. Nelson, P. K. Sen, “Power Quality and Harmonic Distortion on Distribution Systems”, *in IEEE Trans. on Ind. Appl*., vol. 30, No 2, March/April 1994, pp. 176-184.

[4] Y.H. Yan, C.S. Chen, C.S. Moo, and C.T. Hsu, “Harmonic Analysis for Industrial Customers”, *in IEEE Trans. on Ind. Appl.*, vol. 30, No 2, March/April 1994, pp. 462-468.

[5] G. Joos, L. Morán, “Principles of Active Power Filters”, *Tutorial Course Note. of IEEE Ind. Appl. Society Annual Meeting*, Oct. 1998.

[6] W. M. Grady, M.J. Samotyj, A. H. Noyola, “Survey of Active Power Line Conditioning Methodologies,” *in IEEE Trans. on Power Delivery*, vol. 5, no 3, pp. 1536-1542, July 1990.

[7] H. Akagi, “New Trends in Active Filters for Power Conditioning,” *in IEEE Trans. on Industry Applications*, vol. 32, no. 6, pp. 1312-1322, Nov./Dec. 1996.

[8] M. Aredes, K. Heuman and E. Watanabe, “An Universal Active Power Line Conditioner,” *in IEEE Trans. on Power Delivery*, vol. 13, no 2, pp. 545-551, April 1998.

[9] L. Morán, L. Fernández, J. Dixon, R. Wallace, “A Simple and Low Cost Control Strategy for Active Power Filters Connected in Cascade”, *in IEEE Trans. on Industrial Electronics*, vol. 44, no. 5, pp. 621-629, Oct. 1997.

[10] C. Melhorn, T. Davis, G. Beam, “Voltage Sags: Their Impact on the Utility and Industrial Customers”, *in IEEE IAS Trans. on Ind. Appl*., Vol. 34, No. 3, May/June 1998, pp. 549-558