Single-Phase High Power Factor Variable Output Voltage Rectifier, Using the Buck+Boost Converter: Control Aspects, Design and Experimentation

Grover Victor Torrico Bascopé* and Ivo Barbi

FEDERAL UNIVERSITY OF SANTA CATARINA
Department of Electrical Engineering
Power Electronic Institute
P. O. Box. 5119
88.040-970 - Florianópolis - SC - Brazil
Tel.: (55)48-331.9204 - Fax: (55) 48-234.5422
E-mail: grover@inep.usfc.br and ivo@inep.ufsc.br

Abstract - This paper presents the buck+boost converter, formed by the buck and boost converters connected in cascade. This connection is used to obtain high power factor and output voltage higher or lower than the input.
The proposed converter works at constant frequency, as a boost converter in continuos conduction mode when the input voltage is lower than the output and as a buck converter when the input voltage is higher than the output.
The present converter has a smaller number of reactive elements in comparison to Flyback, Cuk, Sepic and Zeta converters, presenting similar characteristics of operation.
The principle of operation, control and modulation strategy, design and experimentation results are presented in this paper.

I. INTRODUCTION

In usual applications, the single-phase rectifier with power factor correction is used with the boost converter, especially in power supply design. However, the employment of this converter is not always advantageous or possible. Its largest inconvenience is the impossibility of obtaining in the output a lower regulated voltage than the peak value of the alternated input voltage. There are many applications where this condition is necessary. Another common situation is a wide range controlled output voltage, where it's peak value is inferior to the input peak voltage [1][2].

The Flyback, Sepic, Zeta and Cuk converters can be used in these cases. The first of them however produces an output voltage with inverted polarity. This is not always desirable. The other converters use a large number of high frequency reactive elements. There are not studies that guarantee that they are advantageous in these cases, especially in high power applications (more than 1500W) and model controls.

In this paper another converter for this applications will be studied, generated from the cascade association of a buck and a boost converter, with the suppression of redundant reactive elements. The resulting topology is represented in Fig. 1, associated to a single-phase rectifier. The converter in this paper will be denominated "buck+boost converter", for differentiation with respect to the classic buck-boost (Flyback) converter.

This converter operates in the conventional buck mode when switch S_2 is maintained turned off and S_1 is turned on with a duty cycle D, resulting in a static gain equal to D. It operates in the boost mode when S_1 is maintained turned off and S_2 is turned on with a duty cycle D, resulting in a static gain 1/(1-D). It operates in the buck-boost mode when S_1 and S_2 are commanded by the same gate voltage signal and operates with duty cycle D. In this case its static gain is D/(1-D).

In this case two operation modes can be distinguished. The "buck or boost" mode and the "buck and boost" mode. The latter uses a simpler way to command the converter, since both switches are enabled or disabled with the same signals, generated by comparison of a continuous voltage with a ramp. This is not recommended in power factor correction, due to significant commutation losses in the switches. The "buck or boost" mode is more advantageous, because only one of the switches commutes with the switching frequency, while the other is maintained turned off, or on, for a large period. For this reason, only the "buck or boost" mode is studied in this paper.

II. PRINCIPLE OF OPERATION

The power stage of the buck+boost converter associated to a single-phase rectifier is shown in Fig. 1. An application is supposed in which the output voltage V_o must be smaller than peak input voltage, is shown in Fig. 2, in which the rectified input voltage and output voltage are depicted.

Two modes are observed in Fig. 2. In the first mode the rectified voltage is lower than output voltage V_o. During the intervals $(0,\theta)$ and $(180^o-\theta, \pi)$, the converter is operated in the boost mode. In the interval $(\theta, 180^o-\theta)$ the rectified voltage is greater than output voltage V_o. During this interval the converter is operated in the buck mode.

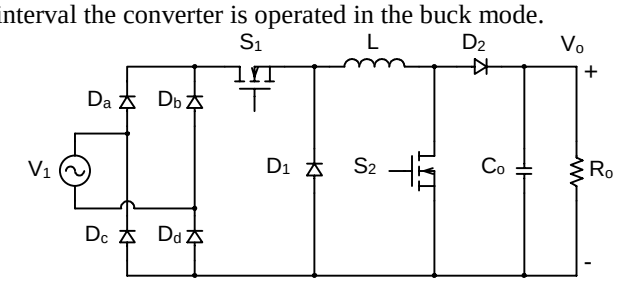

Fig. 1 - Proposed buck+boost converter.

** Is assistant professor of the Electrical Engineering Department at the University "Mayor de San Simon", and a Ph.D. student with financial support from PEC/PG-CNPq (Bolivia-Brazil).*

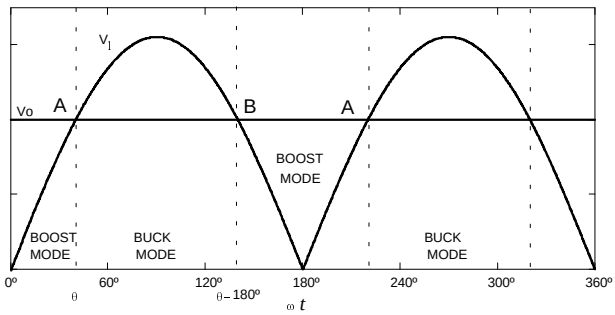

Fig. 2 – Operation modes of the buck+boost converter.

III. Operation Stages in Both Modes

A. Buck Mode ($\theta < \omega t \leq \pi - \theta$)

In this case, the instantaneous input voltage is greater than the output voltage. Switch S_2 is turned off and diode D_2 turned on. Following, operation stages for this operation mode are described.

1st Stage (t_o,t_1) (Fig. 3),.at instant t_o, switch S_1 is turned on, and inductor L stores energy, supplied by source V_1. The current in the inductor increases linearly until reaching its peak value in $t=t_1$.

2nd Stage (t_1,T_S) (Fig. 4), at instant $t=t_1$, S_1 is turned off and D_1 is directly biased. The duration of this stage is equal to Δt_2.

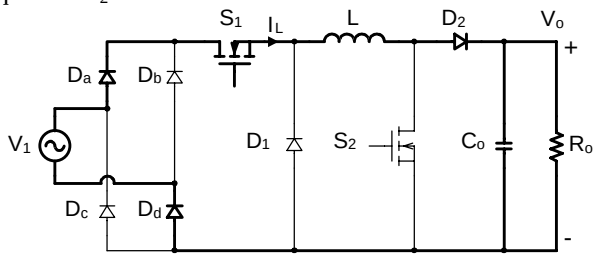

Fig. 3 – First stage.

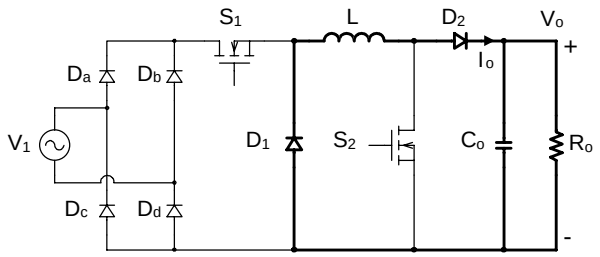

Fig. 4 - Second stage.

B. Boost Mode ($0 < \omega t < \theta$ and $\pi - \theta < \omega t < \pi$)

To operate in the boost mode, the instantaneous input voltage must be inferior to output voltage Vo, condition which is satisfied in the indicated intervals. Switch S_1 is permanently on, during this mode. Following, operation stages are described.

1st Stage (t_o,t_1) (Fig. 5), at instant $t=t_o$, S_2 is gated on. During this stage, inductor L stores energy from the input source. The duration of this stage is equal to Δt_1.

2nd Stage (t_1,T_S) (Fig. 6), at instant $t=t_2$, S_2 is turned off. The energy accumulated in inductor L is transferred to the load trough D_2. The duration of this stage is equal to Δt_2.

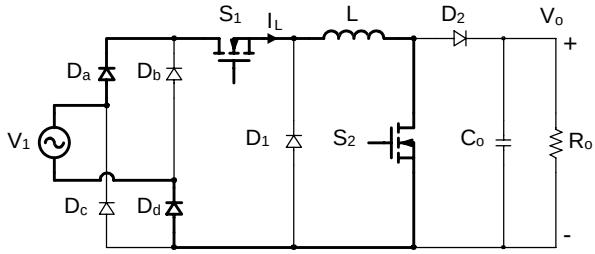

Fig. 5 – First stage.

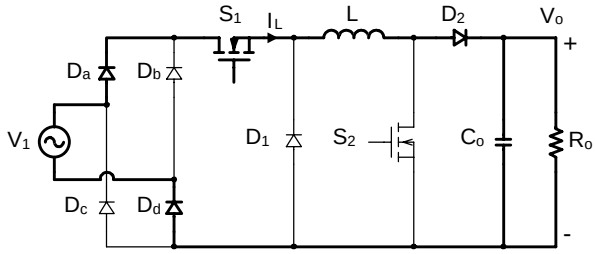

Fig. 6 - Second stage.

IV. Modulation Strategy

The converter operates in the Buck or Boost mode, cyclically. This way, the command signals are not identical and they cannot be generated by the comparison of a single ramp with a continuous voltage. The studied strategy uses two different ramps, as described bellow.

Fig. 7 shows two ramps designated by V_1 and V_2, synchronized, with the same amplitude V_S. The ramp V_1 rises from zero to V_S, while the ramp V_2 rises from V_S up to $2V_S$. The ramp V_1 is compared with the command voltage V_C in the comparator C_1, generating the gating signal S_1 of the buck converter. The ramp V_2, is compared with V_C in the comparator C_2, generating the gating signal for switch S2 of the boost converter.

Fig. 8 shows the behavior of duty cycles D_1 and D_2 corresponding respectively to S_1 and S_2, and the resulting static gain, as a function of the command voltage V_O.

The relative disposition of the two ramps and the mechanism of generation of the gating signal for S_1 and S_2, for $V_C \leq V_S$ and for $V_C \geq V_S$ can be understood better with the help of Fig. 9.

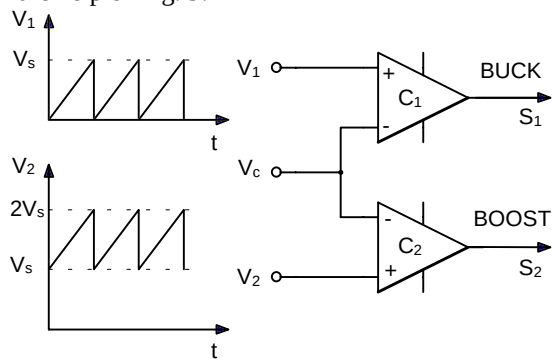

Fig. 7 – Generation of the gating signals for the converter.

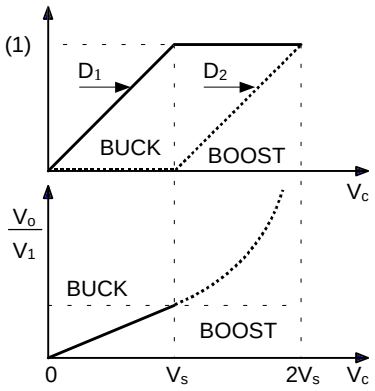

Fig. 8 – Duty cycle and static gain of the converter as a function of V_C.

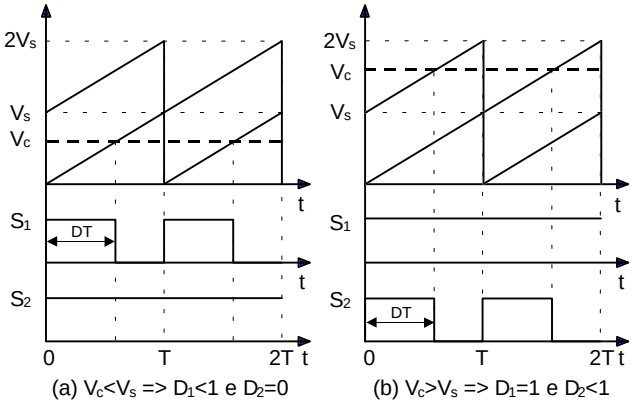

Fig. 9 - Details of the gating signals generation for (a) $V_C<V_S$ and (b) $V_C>V_S$.

V. Strategy of Current Control

The operation of the system shown in Fig.10 is described bellow.

The signal V_B is an image of the rectified voltage V_1, which is multiplied by a continuous voltage V_A.

In the output of the multiplier the current reference I_{ref} is generated, exhibiting also the shape of a rectified voltage.

The current I_1 is sensored through resistor R_{sh}. The current compensator Gc(S), if properly calculated, generates the command signal V_C, which is compared to the ramps of the modulator, generating the gating signals of S_1 and S_2, forcing the instantaneous average rectified current to follow the current reference [3].

The block diagram representing the closed loop current control is shown in Fig. 11. K_D is a constant that multiplied to $V_C(S)$ produces D(S). K_D represents the PWM modulator gain, and its value is obtained with the help of Fig.11.

To obtain the transfer function of the converter H(S), the DC-DC converter is considered initially in steady state, and the input and output voltage are constant before and after the perturbation. Therefore, it can be concluded that the transfer functions for the current control of source V_1 are equal for both operation modes. This is illustrated through expression (1).

$$H(S) = \frac{\Delta I_1(S)}{\Delta D(S)} = \frac{V_O}{S \cdot L} \qquad (1)$$

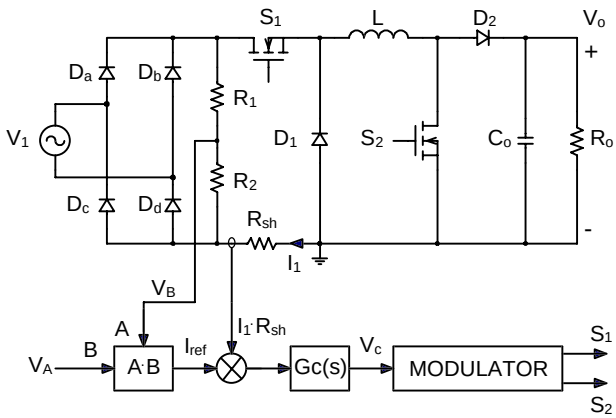

Fig. 10 - Block diagram of the rectified current control

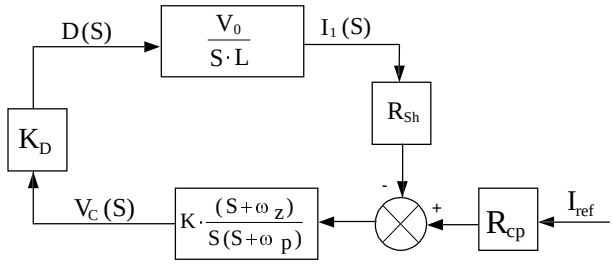

Fig. 11 – Block Diagram of the closed loop current control.

The circuit used for current compensator is shown in Fig.12. The transfer function expressions for the current compensator (2) is presented bellow.

$$G_C(S) = \frac{V_C(S)}{\varepsilon(S)} = K \cdot \frac{(S+\omega_Z)}{S \cdot (S+\omega_P)} \qquad (2)$$

Where:

$$K = \frac{1}{C_{P1} \cdot R_1} \qquad \omega_Z = \frac{1}{R_Z \cdot C_Z} \qquad \omega_P = \frac{C_Z + C_{P1}}{R_Z \cdot C_Z \cdot C_{P1}}.$$

The transfer function is for the passive filter $R_{P2}C_{P2}$ is:

$$F(s) = \frac{1}{R_{P2}C_{P2}S + 1}. \qquad (3)$$

R_{P2} and C_{P2} compose a passive filter with crossover frequency equal to the switching frequency, and is destined to attenuate spikes generated from switching. Below the crossover frequency the capacitor C_{P2} is considered zero, not interfering in the transfer function.

R_{sh} is a resistor with low resistance, employed as an input current sensor.

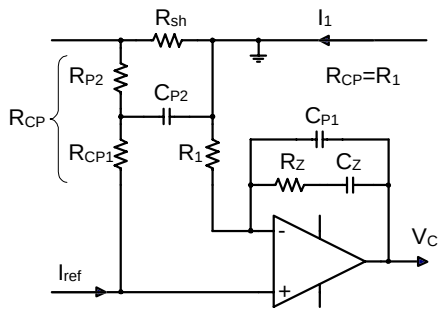

Fig. 12 – Current compensator.

C_{P1}, R_1, R_{CP1}, R_Z, C_Z and the operational amplifier constitute the compensator. The same circuit already studied, for the current compensation in the traditional boost converter is used. With the addition of the $R_{P2}C_{P2}$ filter.

VI. Implementation of Carrier Signals

The circuit implemented to generate the two carrier signals is shown in Fig. 13. Such circuit is utilized to obtain the PWM modulation of the proposed converter. In this circuit, the carrier for S_1 is obtained, directly, from pin 14 of the UC3854 (for Buck-Mode). The carrier for switch S_2 (for Boost Mode) is obtained using a non inverting summing block, where the offset signal V_{offset} and V_1 are averaged and amplified with adequate gain according to the requirement. The operational amplifier of the summing block must have a large bandwidth, in order to preserve the waveform of the carrier. The two carrier indicated previously are compared in two PWM comparators with the control signal Vc (modulator signal) given from pin 3 of the UC3854.

For the control circuit implementation from UC3854 the following into components are used: Multiplier/divider (to obtain the reference current I_{ref}) and the operational amplifiers for the implementation of the current control loop and the voltage control loop.

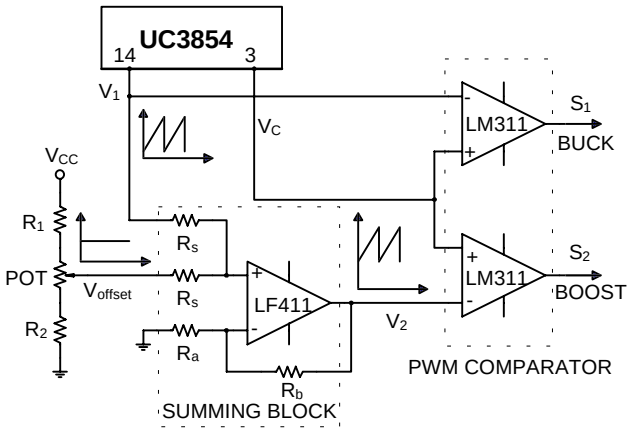

Fig. 13 – Carrier signals generator circuit

VII. Experimental Results

The experimental results are obtained from a prototype with the following specifications: input voltage 110V-60Hz, output voltage 100V and 200V, nominal load current 1A, switching frequency 25kHz.

Aiming to verify the principle of operation as well as the control and the modulation technique a prototype was implemented, as shown in Fig. 14.

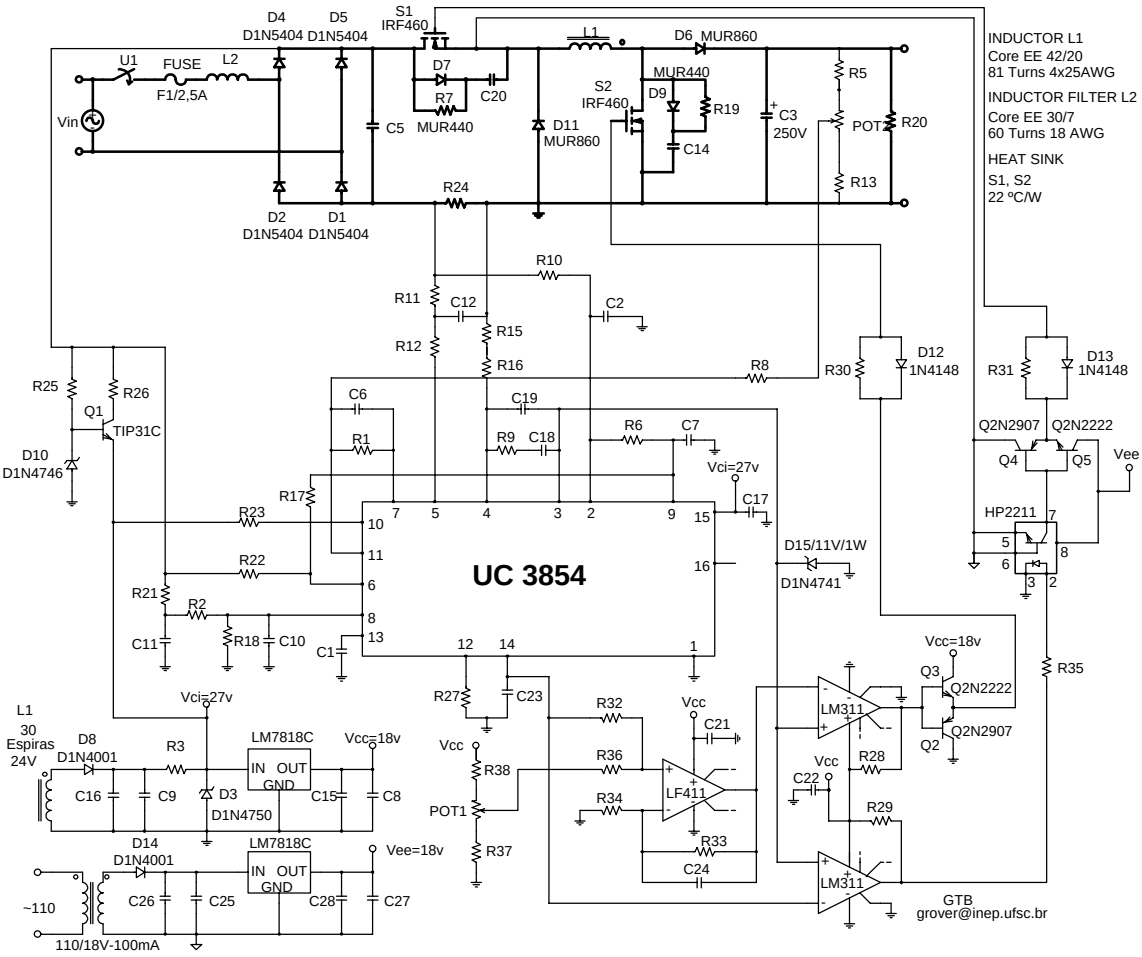

Fig. 14 – Complete circuit schematic of the implemented prototype.

The results are presented for the two specified cases.

A. 1st Case (Boost Mode) V_o=200 V I_o=1 A

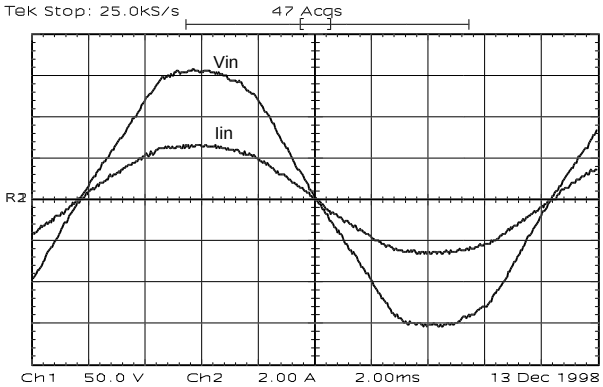

Fig. 15 – Input voltage and current.

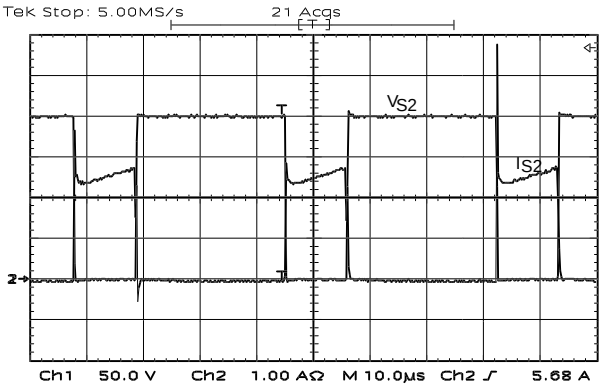

Fig. 16 – Voltage and current in switch S_2.

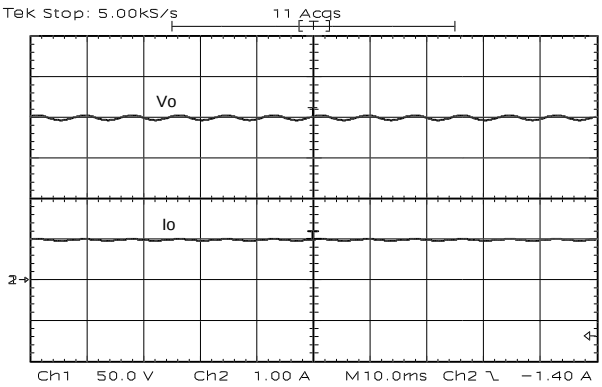

Fig. 17 - Output voltage and current.

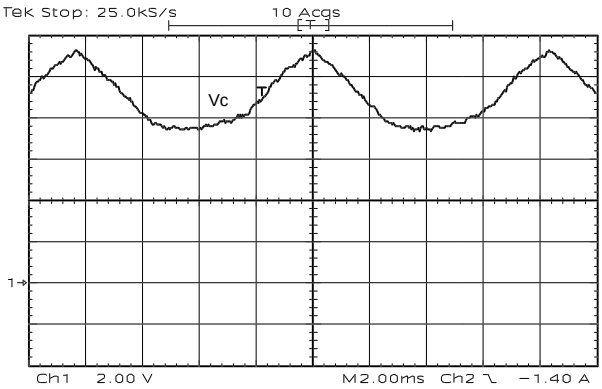

Fig. 18 – Control voltage V_C (Boost-Mode).

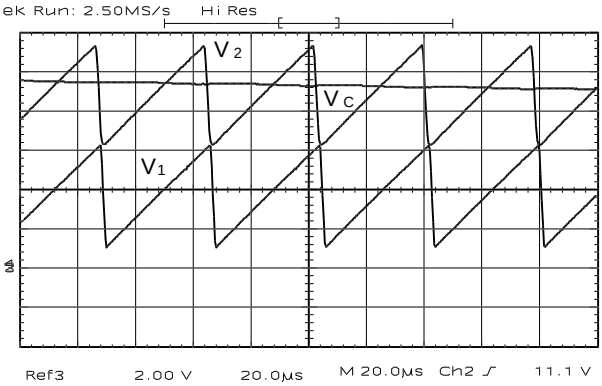

Fig. 19 – Details of the gating signals generation.

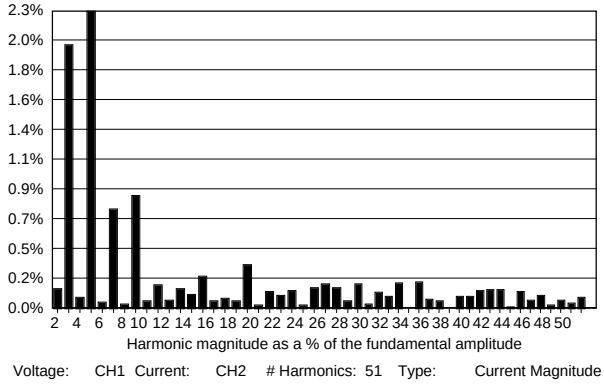

Fig. 20 – Input current harmonic analysis.

B. 2nd Case Vo = 100V I_o = 1 A

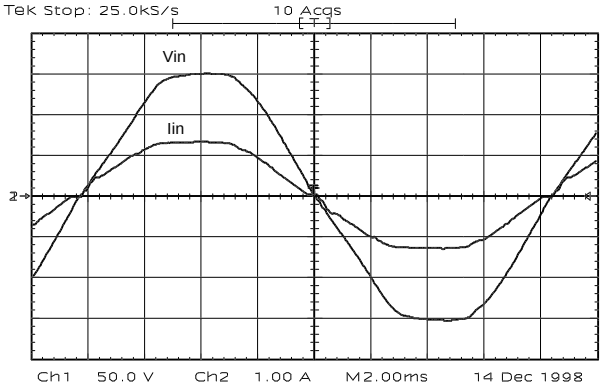

Fig. 21 – Input voltage and current.

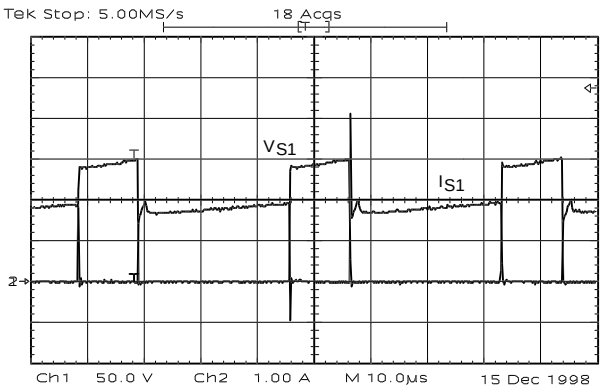

Fig. 22 – Voltage and current in switch S_1.

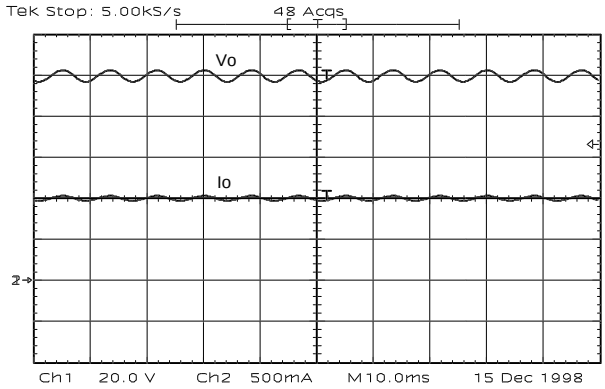

Fig. 23 - Output voltage and current.

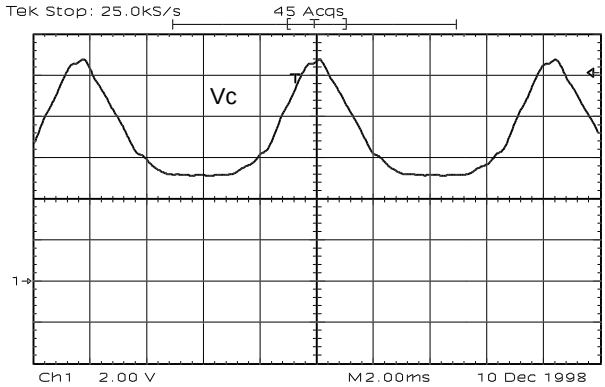

Fig. 24 – Control voltage V_C (Buck-Mode)

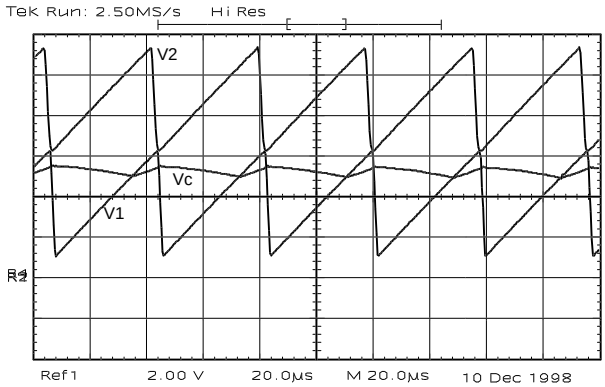

Fig. 25 — Details of the gating signals generation (Buck-Mode).

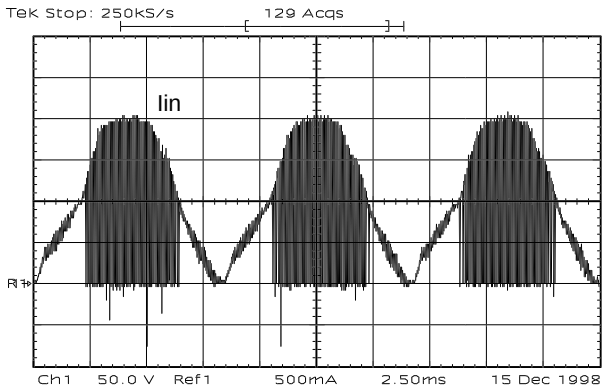

Fig. 26 - Input rectifier current not filtered.

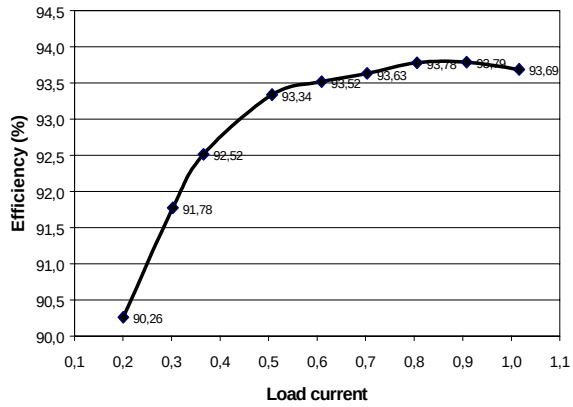

Fig. 27 – Efficiency vs. load current.

VIII. Conclusion

This work presented a single-phase pre-regulator buck+boost rectifier, with high power factor, average current-mode control and hard commutation. Theoretical analysis and experimental results present the following conclusions:

- High power factor is obtained through average current-mode control, for full output and input voltage range. The Total Harmonic Distortion (THD) of the input current is small and complies with the standard IEC-1000-3-2 for switching power supplies.
- The converter is regulated with constant frequency, as the conventional PWM technique.
- The ramp signals generated for each switch presented a steady behavior, thus performing well its foreseen role in the modulation and control strategy.

Therefore the pre-regulator buck+boost rectifier presented advantages in comparison to the classic converters like Flyback, Cuk, Sepic and Zeta, from control point. It allows an operation with better performance and high efficiency (up to 93%), with low THD input current, being recommended for switching power supplies in energy systems for telecommunications.

IX. References

[1] R. Ridley, S. Kern, B. Fuld - "Analysis and Design of a Wide Input Range Power Factor Correction Circuit for Three-phase Amplifications", IEEE APEC 1993, p-p 299-305.

[2] Grover V. Torrico Bascopé, Ivo Barbi, - "Isolated Flyback-Current-Fed Push-Pull Converter for Power Factor Correction", PESC'96 Conference Proceedings, Milano, June 23-27 Italy, 1996. p-p 1184-1190.

[3] Lloyd Dixon –"Average Current Mode Control of Switching Power Supplies", Application Note, Unitrode, 1997, - pp. 356-369.