Multielement Transformers: Study and Implementation

Marcos Antonio C. de Lima João Carlos dos S. Fagundes
INEP/EEL/CTC/UFSC
Campus Universitário - Trindade
CEP: 88040-900 - Florianópolis, SC - Brasil
fagundes@inep.ufsc.br – http://www.inep.ufsc.br

***Abstract* – This work presents the study of a non-conventional approach for high frequency transformers design. From the well-known existent problems in the classical design a new methodology is proposed considering the substitution of the conventional transformer for a set of elementary components, also called "multielements transformer". Several advantages arise from this concept , concerning specially the transformer profile and the thermal distribution of electric and magnetic losses. A practical implementation is provided in order to validate the analytical studies.**

I. Introduction

In the power electronics domain many efforts have been done on these last years in order to produce devices with a minimum of losses, reduced volume and great capacity of energy processing, as well as a high reliability level. The incessant search for the reduction of the size of switching mode power supplies (SMPS) concentrates a high attention on the transformer, considered by many as "the most important element of the converter [1,2]. The well-known existent problems in the modern high frequency switching power transformers such as: high leakage inductance, high losses and high profile are inherent to the conventional projects. Many recent works have proposed optimization methods [2,5] to the magnetic components present in switch-mode power supplies operating at high switching frequencies. These methods include Computer Aided Design, use of different core types (low profile and planar magnetic cores), new converter topologies and switching techniques, different winding configurations and the use of new magnetic materials, with reduced losses in high frequency operation.

The development of the multielement transformers can be considered as a significant contribution to this domain, searching to solve the problems associated with the conventional transformers [1,3]. Furthermore, for certain applications the low magnetic profile is a design requirement that practically imposes this type of physical structure to the transformer. The thermal limitation existent in a conventional device, that means a hot spot temperature located in its center leg does not exist anymore. Instead of that the heat evacuation is distributed over the elementary transformers.

This paper presents the main constructive aspects of such kind of transformer and a design methodology permitting to easily determine and built the magnetic component. In addition, a design example and the corresponding experimental results are provided to illustrate the methodology adopted.

II. The Multielements Transformer Concept

A. Basic Principles

The principle of the multielement transformer is based on the association of a certain number of small magnetic elements, called "elementary transformer", in order to provide the appropriate values of voltage, current and power for a given application. An element is defined as the smallest part having an identifiable structure as a transformer for analytic purposes. This is based on the original concept of "matrix transformer", which was constructed with elements with a single turn in the primary and secondary windings. Such structure should be understood as an attempt to build a transformer with very low leakage inductance, considering that the leakage inductance is proportional to the square of the turns number in the winding (small in this case). However, due to the high values of the peak magnetizing current, the principle of single turn winding was abandoned. Furthermore, the matrix arrangement does not always propitiate the better transformer design and for these reasons the concept of multilelement transformer is more generic.

The association of the elementary transformers, usually identical, is a series-parallel arrangement, where the wanted voltage ratio is obtained by the series and parallels connections of the primary and secondary windings of each element. Figure 1 shows an example of an association of 6 elements. It is important to note that exists a great flexibility in this association as well as in the core size of each element and consequently the number of magnetic cores.

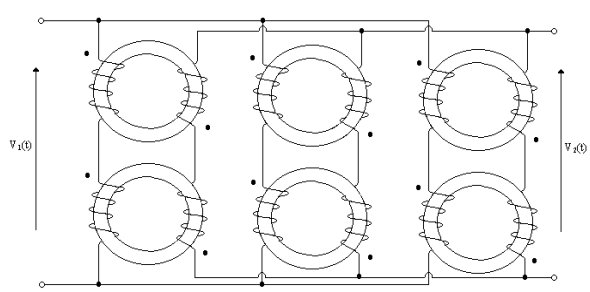

Figure 1. Multielement transformer with 6 elements.

Concerning the thermal characteristic a multielement transformer has an important advantage in comparison with the conventional one, because the distribution of the

elements, that allows a better air circulation and consequently a more efficient cooling of the element.

B. Design Practical Aspects

The selection of the core for a transformer should contemplate aspects as efficiency, temperature and volume, where considerations relative to the flux density and temperature rise must be made. The core size determination depends on several parameters, such as: throughput power, volt-seconds capability, maximum acceptable magnetizing current, isolation requirements, magnetic losses and the wire size and type.

Usually, the most recommended core type for the use in multielement transformers is the toroidal core. These cores have the best benefits combination of low weight and reduced size, as a function of the flexibility of several dimensions, which represents a great advantage when a low profile is desired for an equipment.

Concerning the association of the elementary transformers there are different possibilities: series, parallel and the combination of both, i.e., series-parallel. The choice among them is determined by the specifications of the voltage and the current needed in the transformer windings. Figure 2 illustrates some of these combinations. The correspondent equivalent circuits are shown in figure 3.

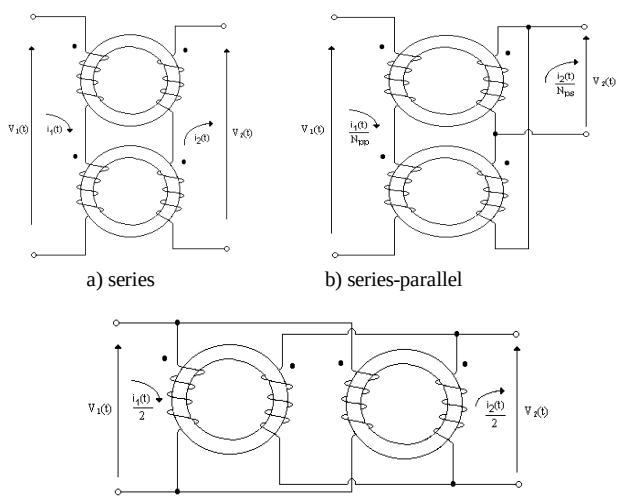

Figure 2. Association of elementary transformers: a) series; b) series-parallel and c) parallel.

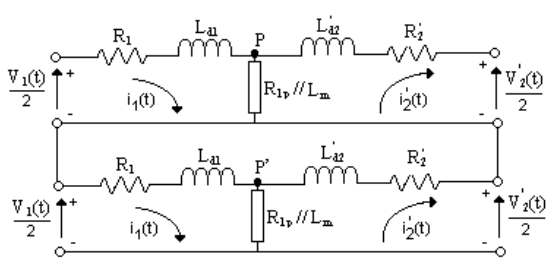

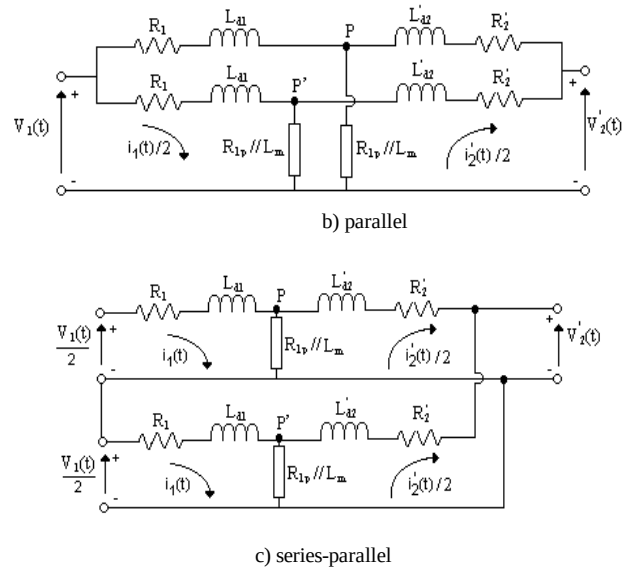

Figure 3. Equivalent circuits for the different associations: a) series; b) parallel and c) series-parallel.

III. Design Methodology

The main objective can be described as being the selective process through which the core amount and configuration of the elements are chosen to satisfied the following conditions: (1) available window area, W_a , greater or equal to the total area of the items to be inserted in the core window; (2) maximum capacity of power transfer, S_o , higher or equal to the total rms power of the transformer, S and (3) total power losses, P_t , smaller or equal to the maximum acceptable value, P_{max} .

From the core characteristics and the converter specifications all the necessary elements for the multielement transformer design are obtained.

A. Maximum Acceptable Total Losses

The thermal specifications determine the maximum acceptable total losses for the chosen core:

$$P_{t\,máx} = \frac{\Delta T}{R_{th}} \tag{1}$$

where ΔT is the temperature rise (^oC) above ambient measured at the centre point of the core (hot-spot) and R_{th} is the thermal resistance of the transformer ($^oC/W$).

B. Optimum Values of Flux and Current Density

The optimum value of flux density, B_o , and of current density in the conductor, J_o , for which the power losses are minimal can be calculated respectively by [2]:

$$B_o = \left(\frac{2}{y+2} \cdot \frac{\Delta T}{Rth} \cdot \frac{1}{C_m \cdot f^x \cdot V_e} \right)^{\frac{1}{y}} \tag{2}$$

$$J_o = \left(\frac{y}{y+2} \cdot \frac{\Delta T}{Rth} \cdot \frac{1}{\rho_c \cdot MLT \cdot k_u \cdot W_a} \right)^{\frac{1}{2}} \quad (3)$$

where V_e is the effective volume of the magnetic core [m^3], f is the switching operating frequency [Hz], ρ_c is the conductor resistivity at the operating temperature [Ω.m] , C_m ,x and y are the coefficients of the magnetic material used in the magnetic core, W_a is the window area [m^2], MLT is mean turn length [m] and K_u is the window utilisation factor.

C. Turns Number of Each Winding

The turns number of each winding is determined by:

$$N_q = \frac{V_{ef\,q}}{K_v \cdot A_e \cdot B_o \cdot f} \quad (4)$$

where $V_{ef\,q}$ and I_{efq} are the rms voltage [V] and the rms current [A] applied to the q winding, A_e is the cross section area of the core [m^2] and k_v is the waveform factor.

D. Total Apparent Power of the Transformer, S

The total apparent power of the transformer with w windings, is given by:

$$S = \sum_{q=1}^{w} V_{ef\,q} \cdot I_{ef\,q} \quad (5)$$

The apparent power that can be obtained from each elementary transformer, S_{el}, is calculated by [2]:

$$S_{el} = k_u \cdot k_v \cdot f \cdot B_o \cdot J_o \cdot A_e \cdot W_a \quad (6)$$

The number of necessary elementary transformers, n_{el}, is determined by:

$$n_{el} = \frac{S}{S_{el}} \quad (7)$$

E. Calculation of Power Losses

The magnetic losses are a function of the core volume, the flux density, the switching frequency and the core magnetic material , and can be expressed by:

$$P_h = C_m \cdot f^x \cdot B_o^{\,y} \cdot V_e \quad (8)$$

The losses associated to the conductor (winding losses) can be obtained through the following equation:

$$P_c = \sum_{q=1}^{w} Fr \cdot \frac{4 \cdot \rho_c \cdot N_q \cdot MLT}{\pi \cdot d_c \cdot nf_q} \cdot I_{ef\,q}^{\,2} \quad (9)$$

where F_r is the resistance factor, that takes into account skin and proximity effects, d_c is the conductor diameter [m^2] and n_{fq} is the number of parallel conductors in the winding.

The total power loss, neglecting the losses due to the circulating currents in the core and the dielectric losses is obtained by:

$$P_t = P_h + P_c \quad (10)$$

IV. Experimental Results

To determine the number of elementary transformers and the association form of the windings, some factors with differentiated priorities should be specified. These factors may be: the total losses in the transformer, the maximum height of the equipment, the available area for the transformer, the current distribution in the windings, the need of points with differentiated voltage levels, the availability of cores, the leakage inductance and the transformer cost.

For design verification a voltage inverter with 180W of rated output power, and an input voltage of 50V, with two isolated output voltages of 24V and 12V, respectively, and output current of 5A in each secondary winding was used.

The priorities adopted in such case were to determine a set of transformers that present the lowest losses and that use the smallest amount of core. The switching frequency chosen was 100kHz and the magnetic core's material used was Thornton-IP12. The characteristic curve of this material is showed in figure 4.

Three different transformers using toroidal cores of different sizes (T19, T23 and T35) were designed and built, considering the design methodology previously presented. The correspondent parameters of such transformers are shown in Table I, for the most efficient associations.

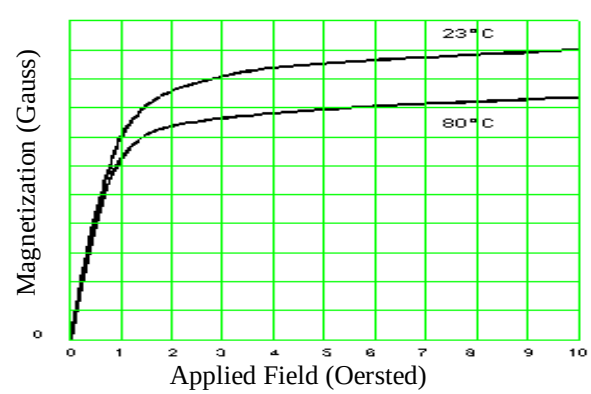

Fig. 4. Magnetization as a function of applied field on the Thornton-IP12 ferrite core.

TABLE I
TRANSFORMERS PARAMETERS

Parameter	Units	T19			T23			T35		
		Pr	Sec1	Sec2	Pr	Sec1	Sec2	Pr	Sec1	Sec2
Number of series circuits	Un	2	2	4	4	4	12	2	4	4
Number of parallel circuits	Un	10	10	5	3	3	1	2	1	1
Number of turns in each element	Un	16	8	2	24	12	2	16	4	2
Current in each element	A	0,37	0,5	1	1,22	1,66	5	1,84	5	5
Voltage in each element	V	25	12	3	12,5	6	1	25	6	3
Power in each element	W	9,26	6	3	15,31	10	5	46,11	30	15
Output power	W	180			180			180		
Input power	W	185,24			183,82			184,46		
Transformer efficiency	%	97,17			97,92			97,58		
Copper loss in each element	W	0,112			0,106			0,444		
Magnetic loss in each element	W	0,150			0,212			0,671		
Total power loss	W	5,24			3,82			4,46		
Total number of elements	Un	20			12			4		
External core diameter	mm^2	19			23			35		
Internal core diameter	mm^2	11			14			22		
Core weight	Grams	5,2			9			40		
Core volume	mm^3	1,050			1,968			8,274		

The electrical diagrams of the elementary transformers presents in Table I are shown in figure 5.

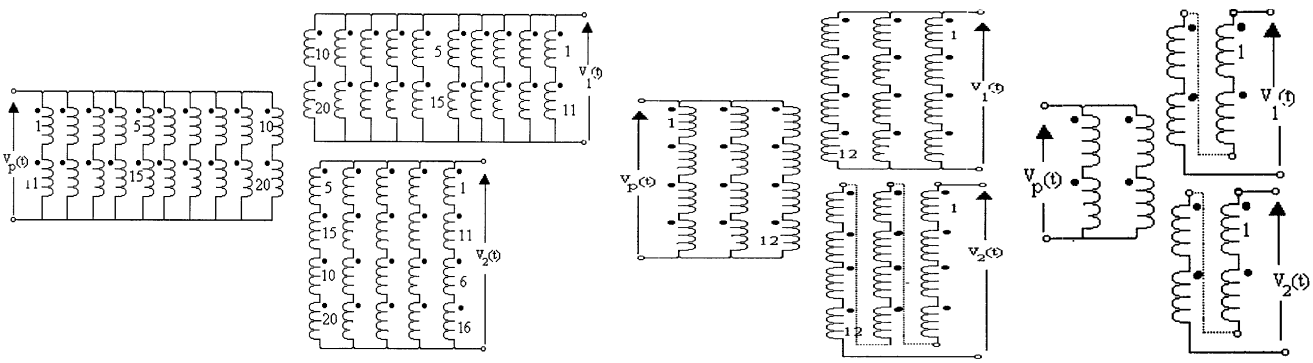

a) toroidal cores T19 b) toroidal cores T23 c) toroidal cores T35

Fig. 5. Electrical diagrams of the transformers with toroidal cores T19, T23 and T35.

The waveforms obtained in the transformer formed by elements using toroidal cores T19 and T35 are presented in figures 6 and 7, respectively.

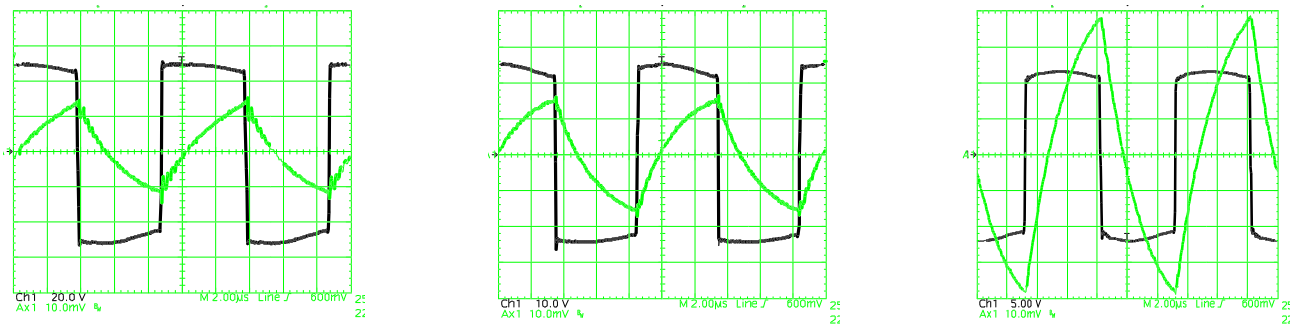

Input voltage and current of primary winding

Output voltage and current of Secondary 1 winding

Output voltage and current of Secondary 2 winding

Fig. 6. Voltages and currents in the windings of the multielement transformer using toroidal cores T19.

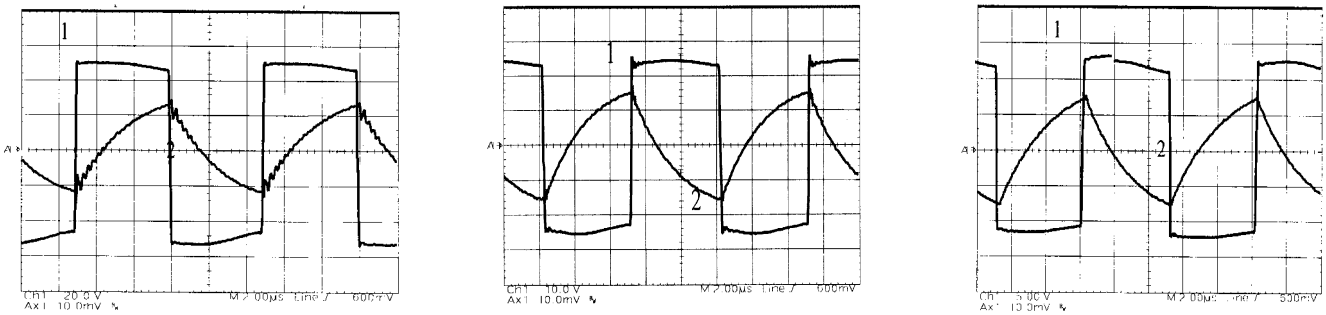

Input voltage and current of primary winding

Output voltage and current of Secondary 1 winding

Output voltage and current of Secondary 2 winding

Fig. 7. Voltages and currents in the windings of the multielement transformer using toroidal cores T35.

The waveforms obtained in the transformer using cores T23 are very similar to the results presents in figure 6 and figure 7. The Table II presents the results of the practical implementation of the three multielement transformers (T19, T23 and T35) proposed in this work.

The picture presented in figure 8 shows the three different transformer prototypes used in the previous mentioned converter. It is noticeable the good accordance between the analytical and practical resuslts.

TABLE II
PRACTICAL RESULTS

Parameter	Units	T19			T23			T35		
		Pr	Sec1	Sec2	Pr	Sec1	Sec2	Pr	Sec1	Sec2
Voltage – winding	V	48,72	23,78	11,32	49,80	22,86	8,62	49,56	24,02	11,92
Current - winding	A	3,96	5,03	4,93	3,57	5,06	3,47	4,02	5,05	4,74
Power - winding	W	192,9	119,6	55,8	177,8	115,4	29,91	199,2	121,3	56,5
Output power	W	189,5			190,40			190,5		
Input power	A	195,7			196,25			196,2		
Total power loss	W	6,20			5,85			5,7		
Transformer efficiency	%	96,83			97,01			97,37		
Temperature rise	^{o}C	20,26			16,25			14,75		

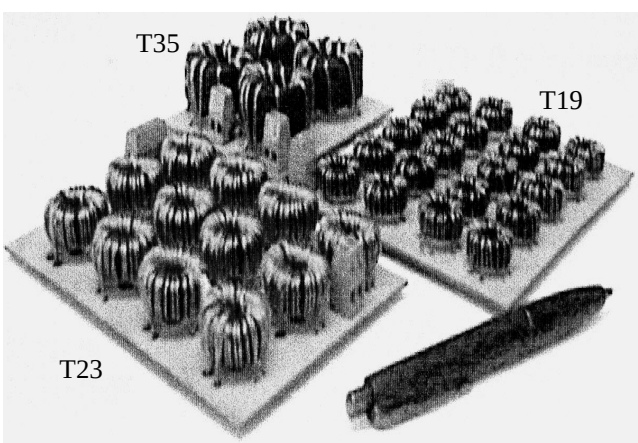

Fig. 8. Multielements transformers using cores T19, T23 and T35.

VI. CONCLUSIONS

The multielement transformers shown a better thermal distribution, since there isn't a single hot point. Through a convenient design, relationships of voltages between the primary and the secondary windings can be obtained.

A smaller turns number of the elementary transformers propitiates a reduction in the value of the total transformer leakage inductance.

The toroidal cores can be easily adapted to the construction of multielemt transformers. They present attractive advantages in future use high frequency switching power converters, mainly in power supply systems where height limitations are imposed.

During the converter operation, it was observed that the elementary transformers maintain a perfect symmetry between the currents and voltages distribution.

VI. REFERENCES

[1] R. Willians, D. A. Grant and J. Gowar, "Multielement Transformers for Switched-Mode Power Supplies: toroidal designs", *IEEE Proceedings-B*, vol. 140, no. 2, March 1993, pp. 100-110.

[2] A. J. Batista, *Modelagem e Otimização de Projeto de Componentes Magnéticos utilizados em Conversores Estáticos de Alta Freqüência*, Florianópolis,SC: INEP/EEL/UFSC, 1998. (Doctoral Thesis, in Portuguese).

[3] K. K. Sum, "Design and Application of Matrix Transformers", in *Proceedings of the Fifth International High Frequency Power Conversion Conference*, 1990, pp.160-173.

[4] Gu, Wen-Jian and R. Liu, "A Study of Volume and Weight vs. Frequency for High Frequency Transformers, *in Proceedings of the IEEE Power Electronics Specialists Conference*, 1993, pp. 1123-1129.