Control of a Variable Speed Induction Generator Using LQG/LTR Methodology

R. Rocha rocha@cpdee.ufmg.br
P. Resende pr@cpdee.ufmg.br
J. L. Silvino silvino@cpdee.ufmg.br
S. R. Silva selenios@cpdee.ufmg.br

UFMG - CPDEE
Cxp 209, Belo Horizonte
MG 30161-970 - Brazil

Abstract— **In this paper, the LQG/LTR (Linear Quadratic Gaussian with Loop Transfer Recovery) methodology is used to design a discrete-time controller for a variable speed electric generation system based on induction generator. The generator excitation and torque and power flow are controlled simultaneously, with the objective of better energy conversion efficiency and better power delivery. The design criteria of control algorithm are presented and analysed by digital simulations.**

Keywords— **induction generator, LQG control**

I. INTRODUCTION

The synchronous alternator has been the principal electric power source used in utility systems since alternating current becames the main form of electric power supply. However, the use of induction generator, in particular the cage rotor, has been preferred in applications such as wind and small hydroelectric power plant due to its simple construction, low cost, greatest power density and ruggedness compared to same power synchronous generators. The induction generator also dispenses the use of external DC supply and it has a inherent protection against current faults and syncronism trouble, which contributes positively with power system stability [1] [2].

Since a switched rectifier permits to regulate both active and reactive power flow of AC source, the use of AC-DC-AC link schemes is interesting to assure a power reactive regulation to variable speed induction generator and electric energy shaping to utility systems, promoting several improvements in conversion system performance [1] [3]. The combined action between generator and AC/DC/AC link becomes the generator torque independent of grid dynamics, providing a mechanism that allows to adjust the prime-mover efficiency, machine characteristics and power demand from utility system simultaneously.

In general, vector techniques are used to control the generation system through decoupling dynamics of prime-movers and power system [4], using simple proportional-integral (PI) or proportional-integral-derivative (PID) controllers to regulate the system. However, the AC/DC/AC link do not assure total system decoupling, so that disturbances or parameter variations can affect the controller performance. The application of robust control techniques, such as LQG/LTR (Linear Quadratic Gaussian with Loop Transfer Recovery) methodology, provides necessary robustness to controller design, assuring stability and performance for all plant uncertainties, such as parameter variations, linearizations, etc [5] [6]. Thus, the robust control offers to generation plant great operational flexibility and better power conversion.

In this paper, a discrete LQG/LTR controller is designed to regulate, simultaneously, generator torque, machine rotor flux and DC link current to maximize the energy extraction of prime-mover and to assure better power delivery to utility system. An integral action is included to controller to assure no steady-state errors.

II. DYNAMIC MODEL

The AC-DC-AC link considered in this paper consists of a bilateral current-fed structure, composed by a switched rectifier, a DC link reactor and a controlled inverter, as shown in figure 1. Fixed capacitors are connected to ac input to absorb overvoltages which occurs when switches current is cut off and to provide filtering function for reducing harmonics in input currents and to help in induction generator excitation. The inverter and utility system set can be considered as a simple variable continuous voltage source V_b. Assuming an ideal rectifier, converter voltages and current relationship are obtained from instantaneous power balance [6]. The electrical dynamics of a squirrel cage induction machine model can be described by stator currents and rotor flux into d-q coordinates reference frame at synchronous reference. The continuous-time model of this conversion system is given by:

$$\frac{dI_{dc}}{dt} = \frac{\left(V_b - \mathbf{v_s}^T \boldsymbol{\sigma}\right)}{L_{dc}} - \frac{R_{dc}}{L_{dc}} I_{dc} \tag{1}$$

$$\frac{d\mathbf{v_s}}{dt} = \omega \mathbf{J} \mathbf{v_s} + \frac{1}{C} \mathbf{I} \left(I_{dc} \boldsymbol{\sigma} - \mathbf{i_s}\right) \tag{2}$$

$$\frac{d\mathbf{i_s}}{dt} = \left(\omega \mathbf{J} - d\mathbf{I}\right) \mathbf{i_s} + c \left(\omega_r \mathbf{J} + \frac{R_r}{L_r} \mathbf{I}\right) \boldsymbol{\lambda_r} + a \mathbf{I} \mathbf{v_s} \tag{3}$$

$$\frac{d\boldsymbol{\lambda_r}}{dt} = M \frac{R_r}{L_r} \mathbf{I} \mathbf{i_s} + \left[\left(\omega - \omega_r\right) \mathbf{J} + \frac{R_r}{L_r} \mathbf{I}\right] \boldsymbol{\lambda_r} \tag{4}$$

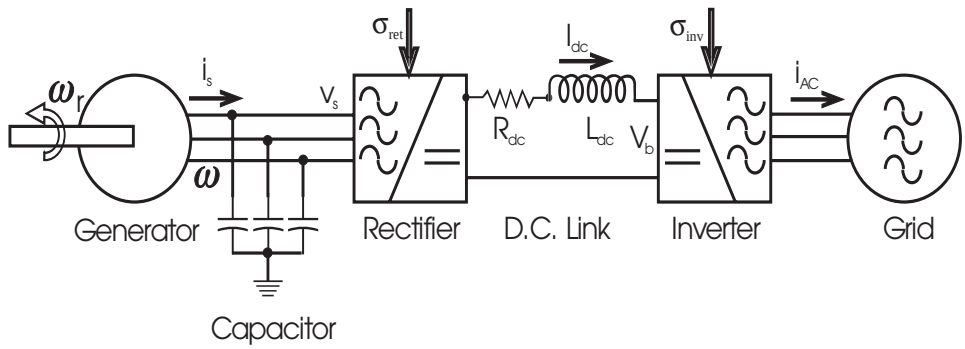

Fig. 1. Energy conversion system

where $\boldsymbol{\sigma}$ denotes the switching function in dq reference and:

$$\mathbf{I} = \begin{bmatrix} 1 & 0 \\ 0 & 1 \end{bmatrix}; \qquad \mathbf{J} = \begin{bmatrix} 0 & -1 \\ 1 & 0 \end{bmatrix}$$

$$a = \frac{L_r}{L_r L_s - M^2}; \qquad c = \frac{M}{L_r L_s - M^2};$$

$$d = \frac{a^2 R_s + c^2 R_r}{a};$$

As usual in vector techniques, the d-axis is oriented with rotor flux, so that the flux component λ_{rq} is always null. Thus, the synchronous speed and the machine torque are given by:

$$\omega = \omega_r + \omega_s = \omega_r + M \frac{R_r}{L_r} \frac{i_{sq}}{\lambda_{rd}} \tag{5}$$

$$T_e = \frac{3P}{2} \frac{M}{L_r} \lambda_{rd} i_{sq} \tag{6}$$

For a sampling interval h, the following discrete-time state model is obtained from continuous-time model (1-4) utilizing the discretization method described in [7] and [8]:

$$\mathbf{x}(k+1) = \mathbf{A_d}\mathbf{x}(k) + \mathbf{B_d}\mathbf{u}(k) \tag{7}$$

where $\mathbf{x}(k) = \begin{bmatrix} I_{dc}(k) & \mathbf{v_s}(k) & \mathbf{i_s}(k) & \boldsymbol{\lambda_r}(k) \end{bmatrix}^T$, the input vector is $\mathbf{u}(k) = \begin{bmatrix} v_b(k) \\ \boldsymbol{\sigma}(k) \end{bmatrix}$ and:

$$\mathbf{A_d} = \begin{bmatrix} A_0 & 0_{1\times 2} & 0_{1\times 2} & 0_{1\times 2} \\ 0_{2\times 1} & \mathbf{A_1} & -\frac{1}{C}\mathbf{B_1} & 0_{2\times 2} \\ 0_{2\times 1} & a\mathbf{B_1} & \mathbf{A_3} & \mathbf{A_4} \\ 0_{2\times 1} & 0_{2\times 2} & M\frac{R_r}{L_r}\mathbf{B_2} & \mathbf{A_5} \end{bmatrix}$$

$$\mathbf{B_d} = \begin{bmatrix} B_0 & -B_0 \mathbf{v_s}^T(k) \\ 0_{2\times 1} & \frac{1}{C}\mathbf{B_1} I_{dc}(k) \\ 0_{2\times 1} & 0_{2\times 2} \\ 0_{2\times 1} & 0_{2\times 2} \end{bmatrix}$$

with:

$$A_0 = e^{-\frac{R_{dc}}{L_{dc}}h};$$

$$\mathbf{A_1} = \mathbf{I}\cos(\omega h) + \mathbf{J}\sin(\omega h);$$

$$\mathbf{A_2} = \mathbf{I}\cos(\omega_s h) + \mathbf{J}\sin(\omega_s h);$$

$$\mathbf{A_3} = \mathbf{A_1} - aR_s\mathbf{B_1} + \frac{R_r}{L_r}\left(1 - \frac{1}{\sigma}\right)\mathbf{B_2};$$

$$\mathbf{A_4} = c\left(\mathbf{A_1} - \mathbf{A_2} + \frac{R_r}{L_r}\mathbf{B_2}\right);$$

$$\mathbf{A_5} = \mathbf{A_2} - \frac{R_r}{L_r}\mathbf{B_2};$$

$$B_0 = \frac{1}{R_{dc}}(1 - A_0);$$

$$\mathbf{B_1} = \frac{1}{\omega}\left[\mathbf{I}\sin(\omega h) + \mathbf{J}(1 - \cos(\omega h))\right];$$

$$\mathbf{B_2} = \frac{1}{\omega_s}\left[\mathbf{I}\sin(\omega_s h) + \mathbf{J}(1 - \cos(\omega_s h))\right]$$

Note that rotor speed variations are reflected into discrete-time model as parameter variations and its influence depends on the sampling interval.

III. LQG/LTR CONTROL DESIGN

The discrete-time model given by equation (7) is linearized about an operating point and expanded in new states to include a discrete integrator on each plant input (to assure no steady-state errors). The new states will be error vector $\boldsymbol{\varepsilon}(k) = \mathbf{r} - \mathbf{C_d}\mathbf{x}(k)$ and the first-order diferences of each state $\Delta\mathbf{x}(k) = \mathbf{x}(k) - \mathbf{x}(k-1)$. New inputs are defined as the first-order diferences of each input $\Delta\mathbf{u}(k) = \mathbf{u}(k) - \mathbf{u}(k-1)$. This new model

$\{\mathbf{A}, \mathbf{B}, \mathbf{C}\}$ is given by:

$$\begin{bmatrix} \varepsilon(k+1) \\ \Delta\mathbf{x}(k+1) \end{bmatrix} = \begin{bmatrix} \mathbf{I} & -\mathbf{C_d}\mathbf{A_d} \\ 0 & \mathbf{A_d} \end{bmatrix} \begin{bmatrix} \varepsilon(k) \\ \Delta\mathbf{x}(k) \end{bmatrix} + \\ + \begin{bmatrix} -\mathbf{C_d}\mathbf{B_d} \\ \mathbf{B_d} \end{bmatrix} \Delta\mathbf{u}(k) + \mathbf{w}(k) \tag{8}$$

$$\mathbf{y}(k) = \begin{bmatrix} \mathbf{I} & 0 \\ 0 & \mathbf{C_m} \end{bmatrix} \Delta\mathbf{x}(k) + \mathbf{v}(k) \tag{9}$$

where $\mathbf{C_d}\mathbf{x}(k)$ represents variables to be controlled to the reference value $\mathbf{r}$, $\mathbf{C_m}\mathbf{x}(k)$ is the avaliable plant measurements and $\mathbf{v}(k)$ and $\mathbf{w}(k)$ are measurement and state noise, respectively. It is assumed that only error vector and current measurements are available in output plant.

The LQG/LTR design procedure merges the optimal control problem with the robust recovery procedure to retrieve the desired robustness properties associated with the linear-quadratic-regulator, assuring system stability and performance for plant uncertainties and mainly parameter variations caused by rotor speed variations [6]. The first step of LQG design is to find the state-feedback regulator $\mathbf{K_c}$ to produce optimal control signal $\Delta\mathbf{u}(k)$, which minimises the cost function [9] [10]:

$$J = \sum_{k=0}^{\infty} [\boldsymbol{\varepsilon}^T(k)\mathbf{Q}\boldsymbol{\varepsilon}(k) + \Delta\mathbf{u}^T(k)\mathbf{H}\Delta\mathbf{u}(k)] \tag{10}$$

where $\mathbf{Q}$ and $\mathbf{H}$ are symmetric and positive definite weighting matrices. The choice of weighting matrices depends of the bandwidth, uncertains, pole-placement, etc. The optimal control signal $\Delta\mathbf{u}(k)$ is given by [9]:

$$\begin{aligned} \Delta\mathbf{u}(k) &= -[\mathbf{H} + \mathbf{B}^T\mathbf{P_c}\mathbf{B}]^{-1}\mathbf{B}^T\mathbf{P_c}\mathbf{A}\Delta\mathbf{x}(k) \\ &= -\mathbf{K_c}\Delta\mathbf{x}(k) \end{aligned} \tag{11}$$

where $\mathbf{P_c}$ is the positive definite solution of following discrete Riccati equation:

$$\mathbf{P_c} = \mathbf{Q} + \mathbf{A}^T\mathbf{P_c}\mathbf{A} - \\ - \mathbf{A}^T\mathbf{P_c}\mathbf{B}[\mathbf{H} + \mathbf{B^T}\mathbf{P_c}\mathbf{B}]^{-1}\mathbf{B^T}\mathbf{P_c}\mathbf{A} \tag{12}$$

The second step consists in Kalman filter design for an optimal states estimation, to be used in the states feedback regulator. Since the processing time required to compute the control signal is not negligible, the predicting version of Kalman filter is used [11]. The predicting filter is given by the following equation:

$$\widehat{\Delta\mathbf{x}}(k+1|k) = \mathbf{A}\widehat{\Delta\mathbf{x}}(k|k-1) + \mathbf{B}\Delta\mathbf{u}(k) - \\ - \mathbf{K_p}(\mathbf{C}\widehat{\Delta\mathbf{x}}(k|k-1) - \mathbf{y}(k)) \tag{13}$$

The filter gain $\mathbf{K_p}$ is given by:

$$\mathbf{K_p} = \mathbf{A}\mathbf{P_f}\mathbf{C}^T(\mathbf{C}\mathbf{P_f}\mathbf{C}^T + \mathbf{V})^{-1} \tag{14}$$

TABLE I

MACHINE AND D.C. LINK DATA

machine parameter	4 polos, $rs = 0.56\Omega$, $rr = 0.56\Omega$, $lls = 2.17$mH, $llr = 2.17$mH
D.C. link parameter	$Rdc = 4\Omega$, $Ldc = 400$mH
Excitation capacitors	$C = 338\mu$F
operating point	$\omega_r = 1050$ rpm; $I_{dc} = -3$ A; $V_b = 34.4$ V; $\boldsymbol{\lambda_r} = 0.5$ Wb; $\mathbf{vc} = \begin{bmatrix} 113.02 \\ 8.25 \end{bmatrix}$ V; $\mathbf{is} = \begin{bmatrix} -2.06 \\ 11.34 \end{bmatrix}$ A; $\boldsymbol{\sigma} = \begin{bmatrix} 0.48 \\ -1.01 \end{bmatrix}$

where $\mathbf{V}$ and $\mathbf{W}$ are covariance matrices and $\mathbf{P_f}$ is a positive definite solution of following discrete Riccati equation:

$$\mathbf{P_f} = \mathbf{W} + \mathbf{A}\mathbf{P_f}\mathbf{A}^T - \\ - \mathbf{A}\mathbf{P_f}\mathbf{C^T}[\mathbf{V} + \mathbf{C}\mathbf{P_f}\mathbf{C^T}]^{-1}\mathbf{C}\mathbf{P_f}\mathbf{A^T} \tag{15}$$

The complete feedback controller is synthetized by connecting of the Kalman filter and the optimal state-feedback regulator, resulting in the structure given by:

$$\widehat{\Delta\mathbf{x}}(k+1|k) = \mathbf{A_p}\widehat{\Delta\mathbf{x}}(k|k-1) + \mathbf{K_p}\mathbf{y}(k) \tag{16}$$

$$\Delta\mathbf{u}(k) = \mathbf{K_c}\widehat{\Delta\mathbf{x}}(k|k-1) \tag{17}$$

where $\mathbf{A_p} = \mathbf{A} - \mathbf{B}\mathbf{K_c} - \mathbf{K_p}\mathbf{C}$.

The inclusion of Kalman filter may be imply on degradation of performance and robustness properties obtained on regulator design. However, it is possible to recover this propeties through of LTR procedure in most cases [11]. To obtain a good loop transfer recovery properties, additional dummy columns and zero row is inserted into B and K_c as suggested by [5] to equalize the inputs number to outputs number, and the pair of covariance matrices $\mathbf{W}$ and $\mathbf{V}$ are adjusted according procedure described in [10].

Energy conversion system based in induction generator needs both generator torque and rotor flux control to obtain desirable prime-mover characteristics for maximum energy extraction and to assure machine excitation. Since flux and torque measurements are not directly available and magnetizing characteristic is known, a indirect control for these variables through stator currents can be used. The power delivery between generator and utility system is controlled by DC link current. It is possible incorporates minimization methods for reduction of loss generator through flux controlled vector adjust into LQG/LTR controller design [4], which can be increase the system efficiency.

A discrete-time LQG/LTR controller was designed to conversion system based in induction generator using data shown in table I. The functional dependence of the magnetizing inductance M on magnetizing current i_m expressed by a piece-wise approximation is given by:

$$M = \begin{cases} 0.0898 - 0.0107\,|i_m| & \text{to } |i_m| \leq 2 \\ 0.0747 - 0.0027\,|i_m| & \text{to } 2 \leq |i_m| \leq 16 \\ 0.0472 - 0.0010\,|i_m| & \text{to } 16 \leq |i_m| \leq 28 \\ 0.01089 & \text{to } |i_m| \geq 28 \end{cases}$$

The complete block diagram of control system is shown in figure 2, where stator currents and d.c. link current are the measured variables, used to regulated electromagnetic torque, rotor flux and power delivered to grid. The sampling interval used in controller design was 100μs. The controller structure was computed using MATLAB control toolbox, with weight and covariance matrices adjusted as $\mathbf{Q} = \mathbf{diag}[10, 20, 15]$, $\mathbf{R} = \mathbf{I}_{3\times3}$, $\mathbf{W} = q\mathbf{B}\mathbf{B}^T$ and $\mathbf{V} = \mathbf{I}_{6\times6}$. A good loop transfer recovery was obtained with $q = 1000$.

IV. SIMULATION RESULTS

A computer simulation was done using MATLAB to verify the performance of proposed controller in face of a rotor speed change in system. Since a step change on shaft torque implies in a exponencial change in rotor speed, this disturbance test was applied in system after $0.1s$ of normal operation, increasing rotor speed of 1050 to 1350 rpm with $\tau_m = 0.05$s. The currents and flux references were adjusted to $I_{dc} = -3$ A and $\lambda_r = 0.5$ Wb respectively. The torque reference was adjusted to follow ω_r^2, corresponding to maximum power delivery for wind conversion system example [12].

The computer simulation results are presented in figure 3. As shown in 3.b and 3.d, rotor flux and D.C. current present almost no variations despite of rotor speed disturbance. The dynamic response of generator torque (3.e) followed the imposed reference with good accuracy. Since the indirect control is used, the stator currents changes (3.c) had the same behaviour of rotor flux and generator torque.

As verified from the results obtained by simulated disturbance speed change, the proposed LQG/LTR controller shown a good performance to regulate accurately rotor flux, DC link current and generator torque, simultaneously, for a rotor speed changes test, meaning that controller design using the LQG/LTR methodology provides robustness to parameter variations caused by rotor speed variations.

V. CONCLUSION

The LQG/LTR methodology for controller design presented in this paper represent a good alternative for variable speed induction generator control, where accuracy and robustness are required, since the system immunity is assured against interaction between prime-mover, machine and utility system and parameter variations caused by speed variations.

VI. ACKNOWLEDGMENT

The authors gratefully acknowledge the financial support of CNPq and FAPEMIG.

REFERENCES

[1] F. P. de Mello and L. N. Hannett, "Large scale induction generators for power systems," *IEEE trans. on Power Apparatus and Systems*, vol. 100, pp. 2610–2618, May 1981.

[2] K. Natarajan, A. M. Sharaf, S. Sivakumar, and S. Naganathan, "Modeling and control design for wind energy power conversion scheme using self-excited induction generator," *IEEE trans. on Energy Conversion*, vol. 2, pp. 501–512, September 1987.

[3] B. Singh, "Induction generators - a prospective," *Electric Machines and Power Systems*, vol. 23, pp. 163–177, March / April 1995.

[4] S. R. Silva, *Sistemas elétricos de alto desempenho a velocidade variável: Estratégias de controle e aplicações (High performance electric systems at variable speed : control strategies and applications).* full professor thesis, UFMG, Brazil, March 1995. in portuguese.

[5] J. C. Doyle and G. Stein, "Multivariable feedback design: Concepts for a classical / modern synthesis," *IEEE transaction on Automatic Control*, vol. 26, pp. 4–16, February 1981.

[6] S. Fukuda, "LQ control of sinusoidal current PWM rectifiers," *IEE Proc. Electr. Power Appl.*, vol. 144, pp. 95–100, March 1997.

[7] C. P. Bottura, J. L. Silvino, and P. Resende, "A flux observer for induction machines based on a time-variant discrete model," *IEEE Trans on Industry Applications*, vol. 29, pp. 349–354, March/April 1993.

[8] G. F. Franklin, D. P. J, and M. L. Workman, *Digital Control of Dynamic Systems.* USA: Addison-Wesley Publishing Company, second ed., July 1994.

[9] B. D. O. Anderson and J. B. Moore, *Optimal Control - Linear Quadratic Methods.* New Jersey: Prentice Hall Inc., 1990.

[10] J. M. Maciejowski, *Multivariable Feedback Design.* Wokingham - England: Addison-Wesley Publishing Company Inc., September 1989.

[11] J. M. Maciejowski, "Asymptotic recovery for discrete-time systems," *IEEE Transaction on Automatic Control*, vol. 30, pp. 602–605, June 1985.

[12] I. K. Buehring and L. L. Freris, "Control policies for wind-energy conversion systems," *IEE proc pt.C*, vol. 128, pp. 253–261, September 1981.

APPENDIX

I. LIST OF SYMBOLS

C = self-excitation capacitance (F);
I_{dc} = D.C. link current (A);
i_m = magnetizing current (A);
$\mathbf{i_s}$ = stator current vector (A);
L_{dc} = D.C. link inductance (H);
L_r = rotor inductance (H);
L_s = stator inductance (H);
M = magnetizing inductance (H);
P = number of poles;
$\mathbf{r}$ = reference vector;
R_{dc} = D.C. link resistance (Ω);
R_r = rotor resistance (Ω);
R_s = stator resistance (Ω);
T_e = electromagnetic torque (N.m);
V_b = equivalent voltage of inverter D.C. side (V);
$\mathbf{v_s}$ = stator voltage vector (V);
$\boldsymbol{\varepsilon}$ = error vector;
$\boldsymbol{\lambda}_r$ = rotor flux (Wb);
σ = leakage parameter;
$\boldsymbol{\sigma}$ = rectifier switching function vector;
ω = electrical frequency (rad/s);
ω_r = shaft speed (rad/s);
ω_s = slip frequency (rad/s).

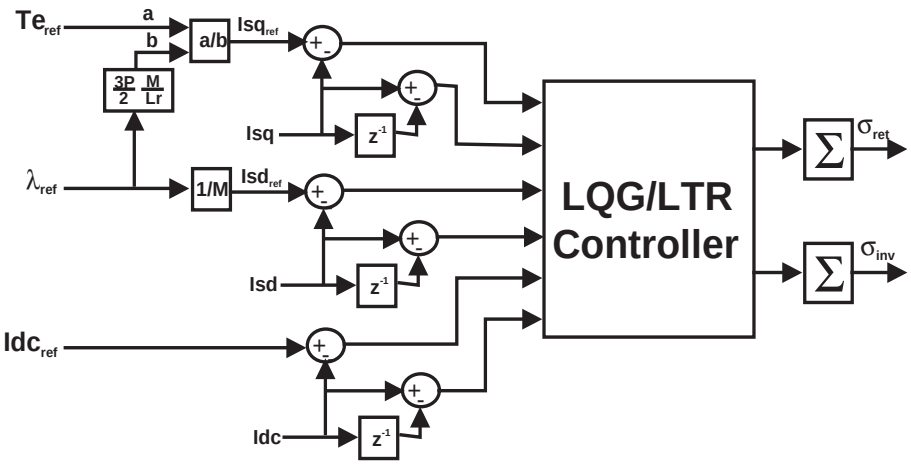

Fig. 2. Control scheme

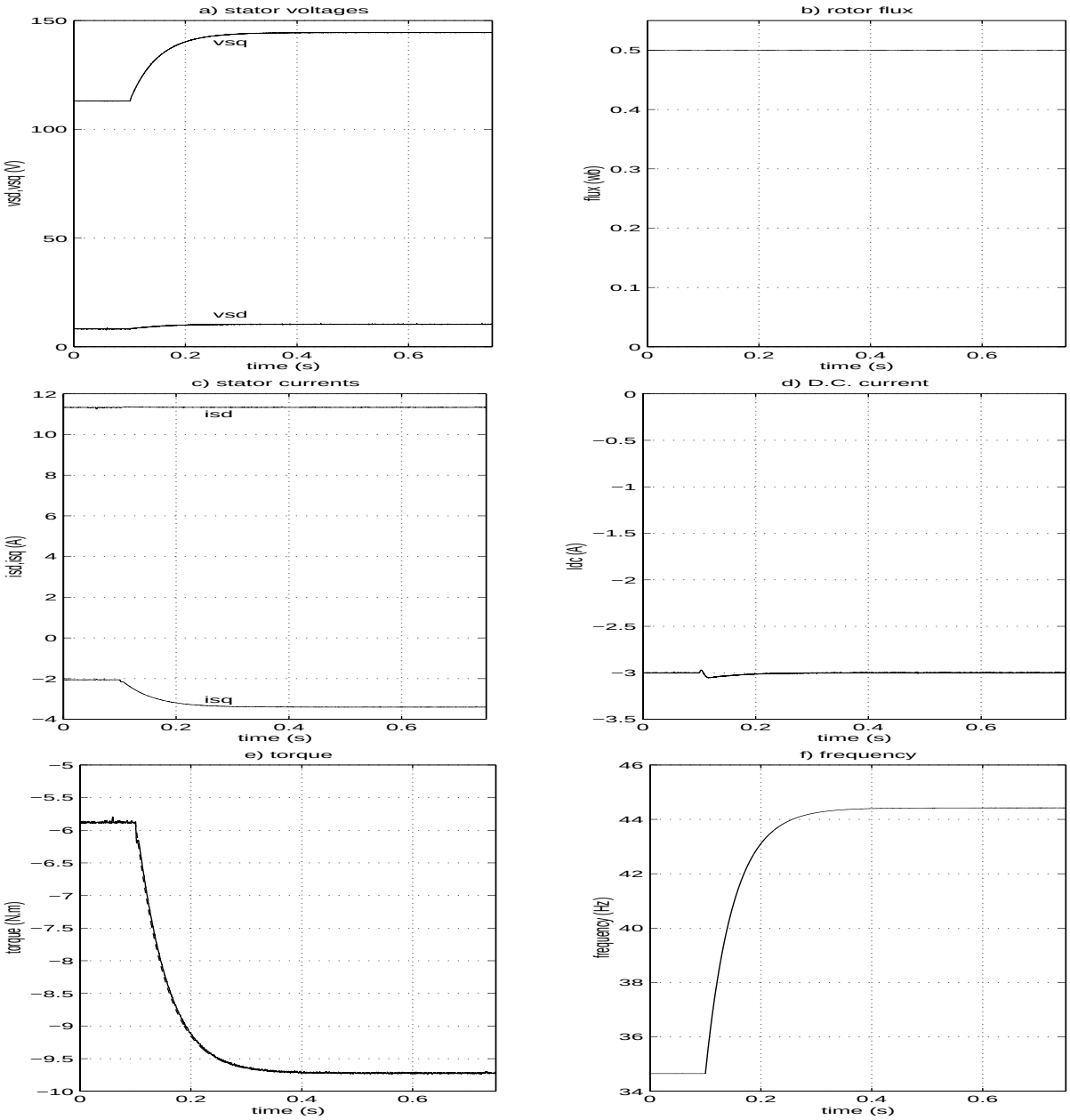

Fig. 3. Simulated responses of energy conversion system to rotor speed step change