A New Resonant Capacitor Clamping Method for Series Resonant Converters

Biju S. Nathan and V. Ramanarayanan,
Department of Electrical Engineering,
Indian Institute of Science, Bangalore, INDIA 560012.
biju@ee.iisc.ernet.in, vram@ee.iisc.ernet.in

***Abstract* - Power converters used for high voltage applications are prone to heavy stress due to output arcing or overloads. This may be disastrous if the feedback circuit responsible for acting on such conditions is slow or fails. This paper presents a new method of short circuit protection for series resonant converter, which is a preferred converter topology for high voltage applications. The method does not have a sensing or feedback circuit. It activates inherently when the resonant capacitor voltage exceeds a pre-set limit. Analysis, simulation and experimental results are also presented**

I. INTRODUCTION

Series Resonant Converters (SRC) are preferred topologies for high voltage high power dc-dc converters. The leakage inductance of the high voltage transformer, which forms a major parasitic element, is effectively included in the tank resonant inductance and thus the associated negative effects are eliminated. Other advantages include soft switching, size reduction, EMI reduction and increased reliability.

Short circuits on the load side in the form of arcing are common in high voltage output power supplies. These lead to large current and voltage build up which may destroy the converter. For increased reliability and protection against such short circuits or overloads, protection circuits are always included in the design. A typical protection circuit against overload for SRC has a resonant tank current sensor and comparator circuits. When the sensed resonant tank current crosses the pre-set overload limit, the control is automatically adjusted to reduce the overcurrent or shut down the system. Even though overload current build up is not sudden in a SRC, the protection circuit has to act fast. This is more so for the present day converters which are switching at higher and higher frequencies. Sensing the tank current is not trivial as the power involved is generally in the kilowatt range. Besides, such protection methods are not inherent and tend to have lower reliability.

In this paper an inherent short circuit protection method for the SRC is introduced. This is achieved by preventing the resonant capacitor voltage from building up to high values as when in a short circuit. Circuit operation, analysis, simulation, design guidelines, experimental results and limitations are presented.

II. RESONANT CAPACITOR CLAMPING

In a SRC, the voltage exciting the resonant tank is a square or quasi-square voltage waveform derived from the dc supply bus using an inverter. The series resonant tank oscillates at its resonant frequency (f_r) which is above or below the switching frequency (f_s) .The peak current and voltage depend on the Q factor of the converter. By definition,

$$Q = \frac{Z_c}{R} \quad \text{where, R is the load} \qquad (1)$$

$$Z_c = \sqrt{\frac{L_r}{C_r}} \quad L_r, C_r \text{ are tank elements} \qquad (2)$$

It can be shown that [1] under normal operation the peak resonant capacitor (C_r) voltage is given by

$$V_{c(peak)} = \frac{MQ\gamma V_{dc}}{2} \qquad (3)$$

where, M = dc voltage gain

$$\gamma = \pi \frac{f_r}{f_s} \text{ (by definition)} \qquad (4)$$

V_{dc}= input dc source voltage

(unity transformer turns ratio assumed)

As seen from (1), Q is large for high load (low R) resulting in large capacitor voltage. The peak tank current also has large values for high Q. In general, the energy in the tank increases as Q increases. The large current and voltage can be avoided by removing this energy by either diverting the tank current or clamping the resonant capacitor voltage to a stiff voltage source.

Fig. 1 shows one such clamping method introduced in [2]. The mentioned SRC is operated above

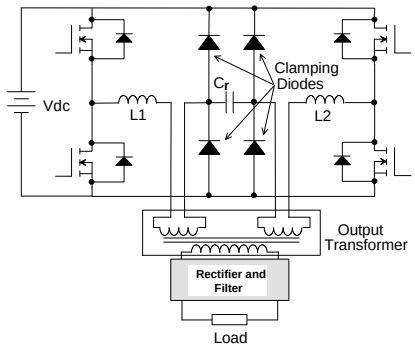

Fig. 1. Series resonant converter with resonant capacitor clamped to dc supply bus using clamping diodes. [2]

resonance and in discontinuous conduction mode by using a Q factor less than one to achieve zero current turn off (ZCS). On heavy loading, the operation shifts from discontinuous mode to continuous mode thus loosing ZCS and increasing stress on the switches. The increased Q results in the resonant capacitor voltage peaking higher than V_{dc} and activating the clamping diodes. This clamps the capacitor voltage to V_{dc} sending back some of the tank energy to the source and limiting the tank current. The converter falls back to the discontinuous mode up to further loading. Thus effectively, the load range for ZCS is increased. Short circuit protection is an offshoot of the method.

Analysis of the SRC operating above resonance shows that for maximum power transfer, the Q factor has to be above one. For example if $f_s/f_r = 1.1$, then the maximum power transfer is around a Q of four [3]. Also, lossless turn off in the continuous mode with low stress on the devices can be achieved with few additional components [3][4]. Thus continuous conduction is not a disadvantage. Under this operating condition the resonant capacitor voltage normally peaks about four times of V_{dc} depending on the other factors like pulse width. Clamping the capacitor voltage at V_{dc} as in [2] is a disadvantage since the delivered power and voltage gain are reduced. Another disadvantage is the need for splitting the resonant inductor ($L_1 = L_2 = 1/2L_r$ in fig. 1) and the output transformer windings into two equal halves.

Fig. 2 shows the proposed new method of clamping the resonant capacitor. It consists of a clamping transformer (Xcl) with two secondary S1 and S2. The primary P is connected across the resonant capacitor C_r. Both the secondary windings are connected through fast diodes D1 and D2 to a common stiff voltage source which invariably is the dc supply voltage V_{dc}. S1 and S2 are similar except for the winding polarity. The turns ratio, P:S1:S2 = n:1:1, decides the clamping voltage V_{clamp}.

$$V_{clamp} = nV_{dc} \qquad (5)$$

During operation of the SRC, the oscillating tank current ***i(t)*** charges the capacitor to voltage ***v(t)*** which varies between its positive and negative peaks given by (3). If |***v(t)***| is less than V_{clamp}, D1 and D2 are reverse biased and do not conduct. Ideally the clamp circuit does not affect the operation of the SRC. When ***v(t)*** exceeds $+V_{clamp}$, D1 turns on and C_r is clamped to $+V_{clamp}$. And when ***v(t)*** goes below $-V_{clamp}$, D2 turns on to clamp C_r to $-V_{clamp}$.

III. Circuit Operation and Analysis

A. PM-SRC Circuit Description

The new clamping circuit is implemented on a Phase Modulated Series Resonant Converter (PM-SRC) [2][4][5]. The PM-SRC (fig. 3) is also referred to as the phase shift controlled SRC or pulse width modulated SRC in the literature. The PM-SRC consists of a full bridge inverter feeding a series resonant tank. Switching frequency is maintained constant while the pulse width of the input voltage is varied for control. The tank current is rectified and filtered using a capacitive filter to produce the required dc voltage. High voltage is obtained using a step up transformer and voltage multiplier circuits.

In the circuit presented here, the clamp transformer turns ratio are so designed that clamping occurs only above the maximum rated load. Analysis of the clamped PM-SRC for normal operation is same as for the unclamped PM-SRC. At or above the rated load, the PM-SRC is designed to operate in the continuous conduction mode. Thus clamping occurs only during the continuous mode of operation.

B. Operation Intervals

Fig. 4 gives the equivalent circuits of the PM-SRC shown in fig. 3 for one of the operating modes relevant here. It is to be noted that there are operating intervals other than those shown in fig. 4 for other modes of operation, duty ratio (D^1) and V_{clamp}. Here the converter is operated above resonance with a duty ratio of 0.75 and is overloaded with a Q factor of ten. V_{clamp} is fixed at $4V_{dc}$.

An operation cycle starts when the tank current reverses direction to the positive half. As seen from interval 1 of fig. 4, power is being delivered to the load

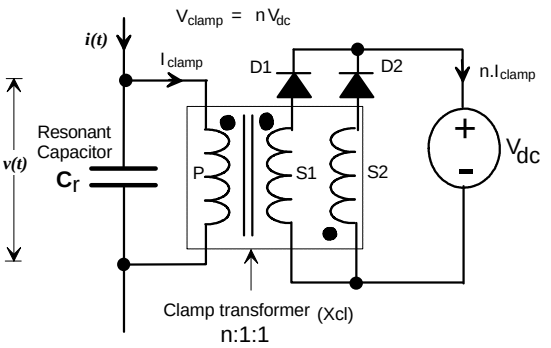

Fig. 2. The new resonant capacitor clamping method using a clamping transformer.

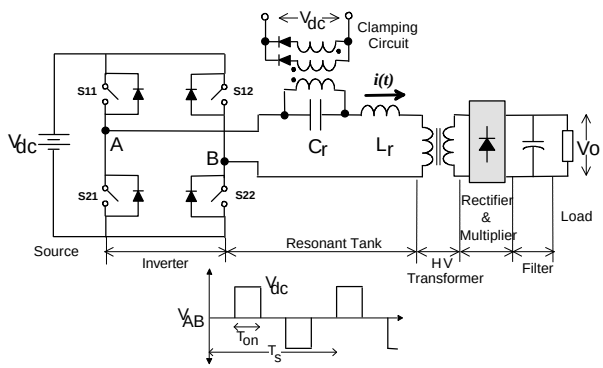

Fig. 3. Phase Modulated Series Resonant Converter (PM-SRC) with clamped resonant capacitor.

[1] D gives the ratio of pulse width to half period of the quasi-square input voltage. D = (Ton)/(Ts/2) in fig.3

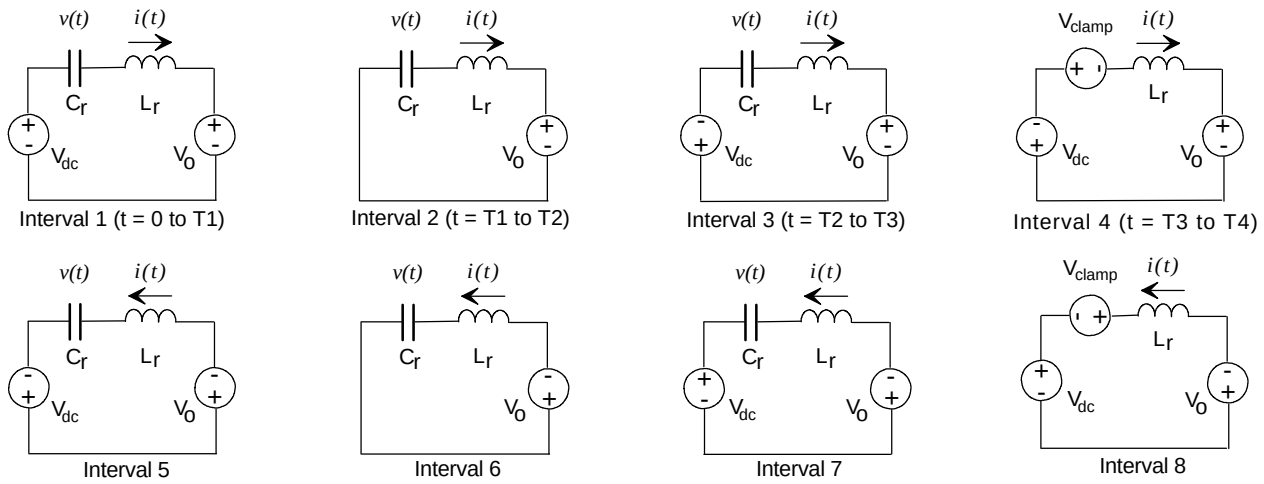

Fig. 4. Steady state equivalent circuits for the clamped PM-SRC over one operating cycle. Intervals 1 to 4 correspond to the positive half of the tank current while intervals 5 to 8 correspond to the symmetrical negative half.

through the tank reactive elements. In interval 2, V_{dc} is removed and the resonant tank is clamped to zero voltage by the conduction of anti parallel diodes. Because of the high Q, the tank current does not die down; in fact it builds up charging C_r to a higher voltage. $-V_{dc}$ is applied during interval 3. A part of the tank energy is returned to the source. The capacitor voltage ***v(t)*** reaches V_{clamp} and is prevented from increasing further in interval 4. The capacitor energy is held constant in interval 4 while the inductor energy is rapidly drained away by the load, source and the clamping source. As a result, the overall tank energy falls rapidly reversing ***i(t)*** as in interval 5. The negative half operation (intervals 5 to 8) is symmetrical to the positive half.

C. Analysis

As mentioned earlier, a number of operating modes exist for the PM-SRC when its resonant capacitor is clamped. The design of the clamping circuit has to be for the worst operating condition, namely a dead output short with a duty ratio of one. The analysis presented here is for such a condition. Because of the dead short circuit the output voltage, $V_o = 0$ and output power, $P_o = 0$. All devices are assumed to be ideal. Interval 2 and 6 in fig. 4 do not exist as D=1 and the tank is never clamped to zero voltage. Time T1 and T2 are then the same. Also from (4),

$$T4 = \frac{T_s}{2} = \frac{1}{2f_s} = \gamma(\text{normalised}) \qquad (6)$$

All the equations used in the analysis are normalised with the base quantities as:

$$V_{base} = V_{dc}$$
$$R_{base} = Z_c$$
$$\omega_{base} = \omega_r \ \text{(resonant frequency)}$$
$$I_{base} = V_{dc}/Z_c$$

The derived circuit equations for the resonant tank current and capacitor voltage for the different intervals are as below.

Interval 1

$$i(t) = (1+n)\sin(t) \qquad (7a)$$
$$v(t) = 1-(1+n)\cos(t) \qquad (7b)$$

Interval 2

Does not exist as D = 1.

Interval 3

$$i(t) = (1+n)\sin(t) - 2\sin(t-T1) \qquad (8a)$$
$$v(t) = 2\cos(t-T1) - 1 - (1+n)\cos(t) \qquad (8b)$$

Interval 4

$$i(t) = (1+n)\sin(T3) - 2\sin(T3-T1 \qquad -(1+n)(t-T3) \qquad (9a)$$
$$v(t) = n \qquad (9b)$$

At the end of the positive half cycle, i(T4) = 0 and at the end of the third interval, v(T3) = n. By substituting these conditions to (9a) and (8b) and solving the resulting equations iteratively, the time intervals T1 and T3 are obtained.

Assuming good efficiency, the power input to the tank during interval 1 is equal to the power returned to the source in intervals 3 and 4. Since power is returned via both the clamping circuit and the anti parallel diodes and power input is via only the active switches, $T1 > \frac{\pi}{2}$. The tank current therefore peaks within interval 1 and the normalised peak tank current is obtained from (7a).

$$I_{peak} = (1+n) \qquad (10)$$

The normalised current at which the clamping circuit turns on is obtained by substituting t = T3 in (9a). This will be the ideal peak clamping circuit current. Normalised primary side average and rms clamping circuit current is given by

$$I_{clamp(av)} = \frac{1}{\gamma}\int_{T3}^{\gamma} i_{clamp}(t)dt \qquad (11a)$$

$$I_{clamp(rms)} = \frac{1}{\gamma}\int_{T3}^{\gamma} i^2_{clamp}(t)dt \qquad (11b)$$

(9a) gives $i_{clamp}(t)$. The clamping diode average current will be n times half of (11a) .

D. Clamping Circuit Non-Idealities

The previous analysis did not account for the leakage and magnetising inductance of the clamping transformer. These elements cannot be neglected in the actual design. A high leakage inductance prevents the sudden transfer of capacitor current to the clamping circuit. As a result, the capacitor voltage will go higher than V_{clamp}. It will also prevent the turn off of the clamping diodes even if the capacitor voltage goes below V_{clamp}. This results in an additional operation interval (fig. 5) where the tank current has reversed direction but the clamping circuit is still operational. That is, interval 1 of fig. 4 is now preceded by interval 1' of fig. 5 where power is supplied to the load by the source and the capacitor is discharged both by the load current and the leakage inductance. The peak tank current will then be lower than the one obtained from (10) as the initial capacitor voltage for interval 1 is now lower. While a certain amount of leakage inductance is seen to be beneficial, a very large one will prevent the fast removal of tank energy on initiation of clamping thus negating the function of the clamping circuit.

A low magnetising inductance can effect the operation of the SRC during the unclamped normal operating mode as it forms a path parallel with the resonant capacitor.

IV. Design Example

In this section a design example is presented. The resulting clamping circuit is built and tested. Results are given in the next section.

The prototype converter is a PM-SRC with $V_{dc} = 40V$ and a required output voltage $V_o = 25V$. The maximum power delivered is 200W at a Q factor of four. From (1), $Z_c = 12.5$. The switching frequency is 100kHz and is $1.1f_r$. The base values are

$$V_{base} = 40V \qquad (12a)$$
$$R_{base} = 12.5\Omega \qquad (12b)$$
$$I_{base} = 3.2A \qquad (12c)$$

From (3) the normal peak resonant capacitor voltage is $V_{peak} = 143V$. If the clamping source is V_{dc}, the clamping transformer turns ratio is then obtained as

$$nV_{dc} > 143 \Rightarrow n = 4 \qquad (13)$$

and from (5), $V_{clamp} = 160V$ (14)

Peak tank and inverter switch current during a short circuit is obtained from (10) as $I_{peak} = 16A$.

The normalised time intervals T1 and T3 (fig. 4) are calculated as, 1.81 and 2.27 respectively. RMS clamping circuit current as obtained from (11b) is about 2A. Peak clamp circuit current is 9.5A.

V. Simulation and Experimental Results

A. Simulation

The resonant capacitor clamped PM-SRC with parameters as calculated in section IV is numerically simulated. The equations have been derived in section III. Fig. 6 shows the normalised simulated waveforms for the overloaded condition given in section IIIB. The related equivalent circuits were shown in fig. 4. Fig. 6 shows that the tank peak current I_{peak}, is lower than for the worst case given in (10).

A 15% clamping transformer leakage inductance is included in the simulation for the short circuit condition. The waveforms are shown in fig. 7. The capacitor voltage is seen to increase beyond V_{clamp} by about 18%. However, the tank current is seen to come down by 10% to the value without leakage inductance. A

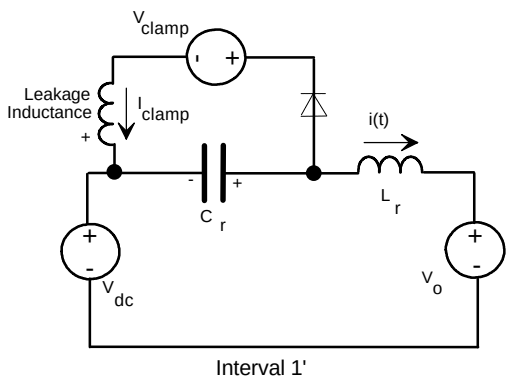

Fig. 5. Equivalent circuit for interval 1'

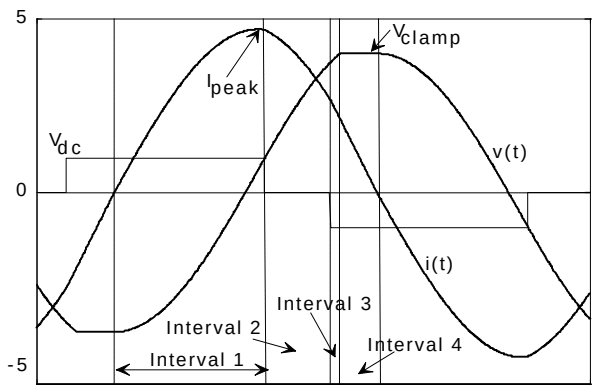

Fig. 6. Simulated waveforms of the equivalent circuits given in fig. 4 (D=0.75)

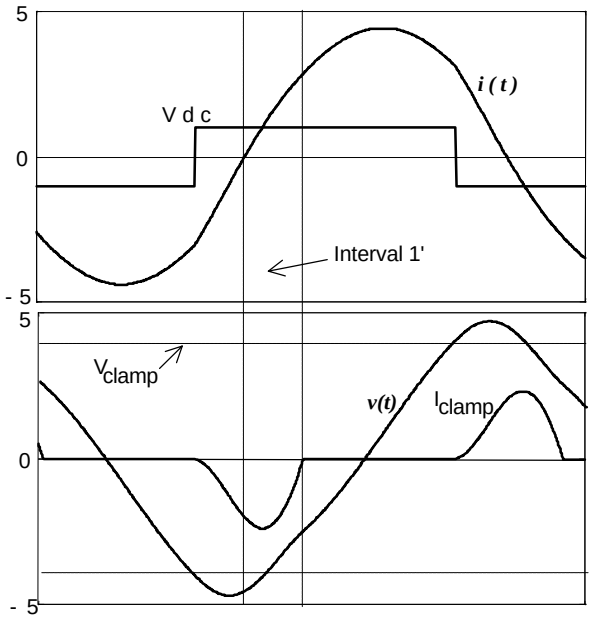

Fig. 7. Simulated waveforms for an output short with 15% clamp circuit leakage inductance . (D=1)

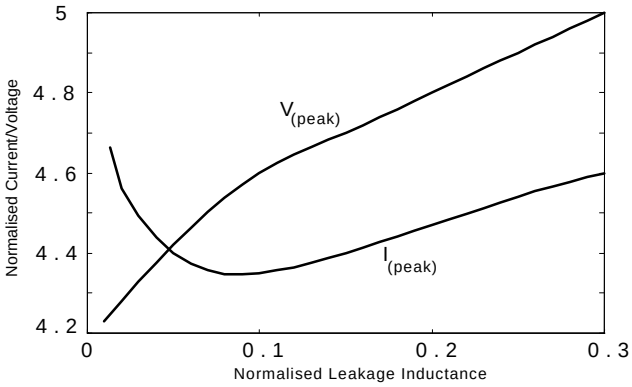

Fig. 8. Peak tank current and voltage of a short circuited SRC for different clamp circuit leakage inductance.

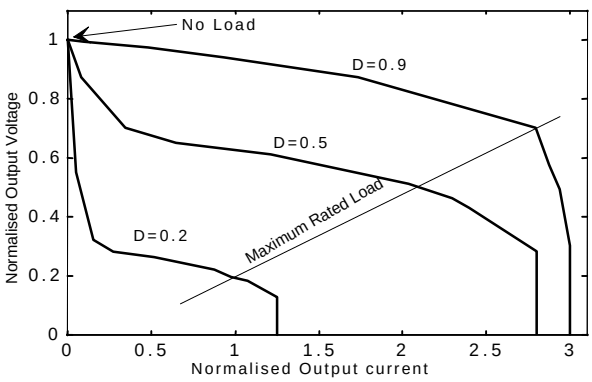

Fig. 9. Output characteristics for the clamped

plot of the peak tank current and peak capacitor voltage versus the leakage inductance is
given in fig. 8. It is observed that the peak of the tank current is lowest for a leakage of about 10%.

The converter output characteristics from fig. 9 clearly show the short circuit and overload current limiting properties of clamping the resonant capacitor voltage.

B. Experimental Results

The prototype used the specification and design from section IV. The leakage inductance of the clamping transformer was measured as 15%. The converter was run with full duty ratio and output shorted. No other feedback or current limiting methods were used. Fig 10 gives the steady state oscilloscope output of the input voltage and tank current for the short circuit. Fig. 11 shows the resonant capacitor voltage and secondary side clamping current for the same conditions. The increase in the capacitor voltage above the clamping voltage of 160V is clearly evident. The tank current is also seen to have a lower peak as obtained in the simulation. Table 1 compares some of the normalised parameters obtained from analysis, simulation using leakage inductance and actual measurement.

TABLE I
COMPARISON OF PARAMETERS (NORMALISED)

Parameter	Analytical	Simulation	Measured
Peak Tank Current	5	4.43	4.84
Peak Capacitor Voltage	4	4.72	4.68
Peak Clamping Current	2.94	2.35	-

The normalised output characteristic of prototype converter in fig. 12 is seen to resemble the simulated one in fig. 9. The characteristics are similar to those of an unclamped PM-SRC up to the rated load [3]. Beyond which, the tank current is limited by the clamping action.

VI. CONCLUSION

A new method of resonant capacitor clamping for series resonant converter has been introduced. The new clamping method is analysed for an ideal operation on a phase modulated SRC and found to provide inherent short circuit protection and overload current limiting. A design method is proposed where the resonant capacitor voltage is clamped above the maximum rated load.

Effect of leakage inductance of the clamping circuit is accounted for in the numerical simulation. It is observed that a certain amount of leakage inductance is beneficial as it prevents sudden transfer of capacitor current to the clamping circuit. Other effects of the leakage inductance are reduction of resonant circuit current and increase of resonant capacitor voltage.

The short circuit current limiting feature is tested on a 200W PM-SRC with a duty ratio of one and the output shorted. The results are found to agree with that of the simulation.

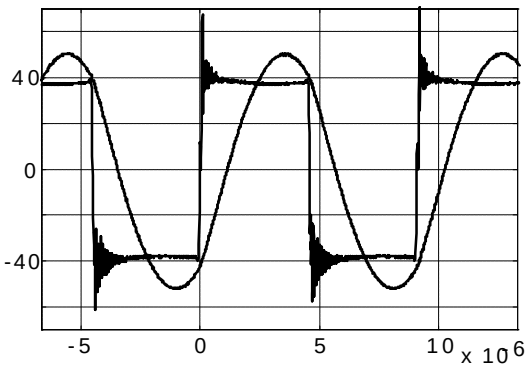

Fig. 10 Oscilloscope plot of the input voltage and resonant tank current for an output short (D=1)

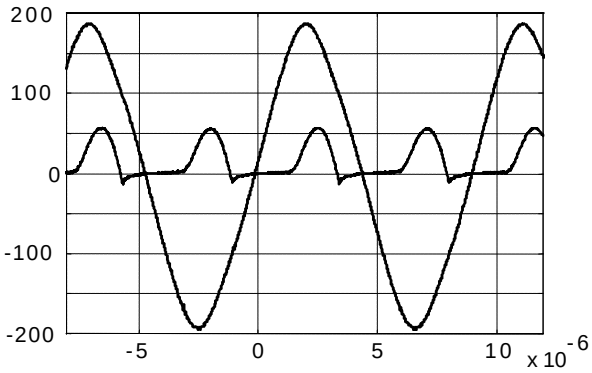

Fig. 11 Oscilloscope plot of the resonant capacitor voltage and secondary side clamping current for an output short

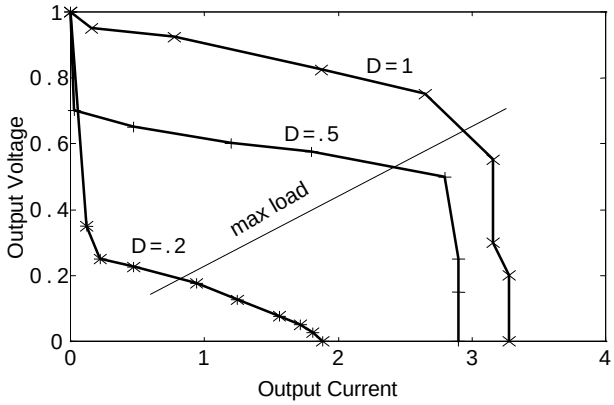

Fig. 12 Output characteristics (normalised) of the prototype converter

VII. REFERENCES

[1] V. Vorperian and S. Cuk, "A Complete DC Analysis of the Series Resonant Converter," in *IEEE Power Electronics Specialist Conf. 1982 Rec.*, pp. 85-100.

[2] B. S. Jacobson and R. A. DiPerna, "Series Resonant Converter with Clamped Tank Capacitor Voltage," in *IEEE Applied Power Electronics Conf. 1990 Rec*. pp. 137-146.

[3] Biju S. Nathan, "Analysis and Design of Series Resonant Converter for High Voltage Applications," MSc(Engg.) Thesis, Dept. of Electrical Engg., Indian Institute of Science, 1999.

[4] Robert L. Steigerwald, "High Frequency Resonant Transistor DC-DC Converters", IEEE Trans. on Industrial Electronics, vol. IE31, No.2, May 1984, pp.181-191

[5] G.R.Nagabhushana, V.T.Ranganathan, V.Ramanarayanan, “Development of Compact High Voltage Power Supplies and Other Subsystems Towards Realising High Average Power Transmitter for ASP Programme”, IISc Technical Report ref. CP 2585/0404/95, Indian Institute of Science, Bangalore, India, 1996