Single Phase Active Power Filters Based on the Full-Bridge Current Source and Voltage Source Inverters Controlled through the Sensor of the AC Mains Current

Fabiana Pöttker de Souza and Ivo Barbi
Federal University of Santa Catarina - Department of Electrical Engineering - Power Electronics Institute
P. O. BOX 5119 – 88040-970 – Florianópolis – SC - Brazil
Phone: 55-48-331.9204 – FAX: 55-48-234.5422 – E-mail: fabiana@inep.ufsc.br

***Abstract* - This paper presents single-phase active power filters based on the full-bridge voltage source and current source inverters. The active power filters are controlled through the sensor of the input current, allowing the compensation for the load current harmonic distortion and the load current phase displacement. Theoretical analysis, design examples and experimental results of two 1600VA, 30kHz active power filters, employing the full-bridge voltage source and current source inverters are presented.**

I. Introduction

In the last years the number of non-linear loads has been increasing rapidly. These non-linear loads draw a current form the AC Mains with harmonic distortion and phase displacement, leading to low power factor, low efficiency, interference by the EMI, among others. A classic solution is the use of passive filters, which have resonance problems, large size and fixed compensation characteristics. The most common single phase non-linear load is the uncontrolled rectifier followed by a capacitive filter. For this specific non-linear load the use of a Boost pre-regulator provides a reduction in the harmonic distortion and an improvement in the power factor. However, the Boost pre-regulator can not be used in equipment already in service, and it is applied only to one kind of non-linear load.

The shunt active power filter is a very interesting solution for the non-linear load problem because, if adequately controlled, it is able to compensate for the load current harmonic distortion and the load current phase displacement. Besides that, as it is placed in parallel to the load it is easily installed and its power rating is a percentage of the load. It processes a reactive power and some active power due to the switching losses and other parasitic components.

The single phase active power filter more widely used is the full-bridge voltage source inverter. Many techniques to control the voltage source inverter have been proposed, usually calculating the load current harmonic content [1], and more lately through the sensor of the AC Mains current [2] [3]. However, in order to be connected in parallel to the AC mains the voltage source inverter needs a coupling inductance, which limits the active filter performance. On the other hand, the full-bridge current source inverter may be connected directly to the load and it is naturally a current amplifier, so a better performance may be expected. Some works have been made involving the full-bridge current source inverter which is, as the voltage source inverter, usually controlled through the calculation of the load current harmonic content [4] and more lately through the sensor of the AC Mains current [5].

In this work single-phase active power filters based on the full bridge voltage source and current source inverters are presented.

II. Control Strategy

The active filters based on the full-bridge voltage source and current source inverters have their control based on the sensor of the AC mains current, allowing the compensation for the load current harmonic distortion and the load current phase displacement. It is important to emphasize that it is not necessary to calculate the load current harmonic content.

The switches operate at a constant frequency (PWM) with a three level modulation technique, which is employed with two triangular signals with a phase displacement of 180°. The modulation techniques for the voltage source and current source inverters are shown in Fig. 2 and 4, respectively. The advantage of using the three level modulation technique is that the voltage V_{ab} (voltage source inverter - VSI) and the current i_f' (current source inverter - CSI) have a frequency that is two times the switching frequency. The inductor L_f size (VSI) and the high frequency filter (CSI) are optimized, and the active filters performance are improved.

A. Active Filter Employing the Full-Bridge VSI

The full-bridge voltage source inverter used as an active filter and its control diagram is shown in Fig. 1. The inverter is connected in parallel to the AC mains through a coupling inductance L_f and its DC side is connected to a capacitor filter C_f.

The voltage source inverter is basically a bi-directional current Boost converter. The average current mode control technique employed in the Boost pre-regulator is suitable for the voltage source inverter. The active filter voltage and current control loops are shown in Fig. 1. The outer voltage loop consists in the comparison of the voltage V_f' with a reference voltage. The resulting error is the input of the voltage controller. A sensor of the input voltage V_s multiplies the voltage controller output signal. The result of this multiplication is a reference current i_{sref}. The inner current loop consists in the comparison of the reference current i_{sref} with the AC mains current. The resulting error is the input of the current controller. The current controller output signal is compared with the triangular signals, generating the drive signals for the switches.

B. Active Filter Employing the Full-Bridge CSI

The full-bridge current source inverter used as an active filter and its control diagram is presented in Fig. 3. The inverter is connected in parallel to the load through a high frequency filter (L_1 and C_1), so that the harmonics due to the switching frequency will not flow in the AC Mains. The inverter DC side is connected to an inductance L_f.

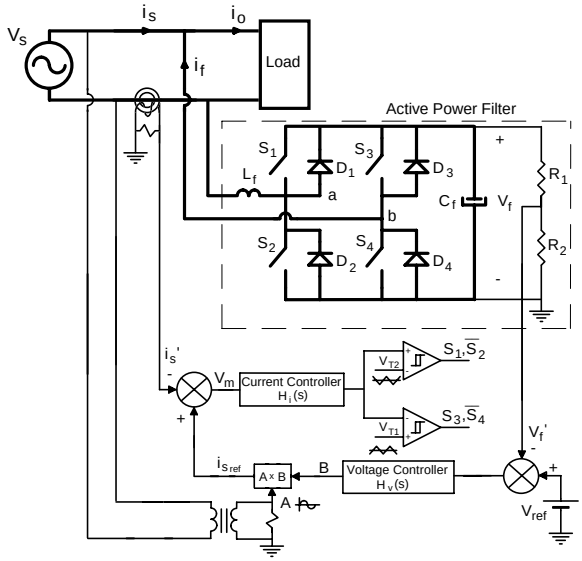

Fig. 1. Diagram of the Full-Bridge Voltage Source Inverter operating as an Active Power Filter and the proposed control strategy.

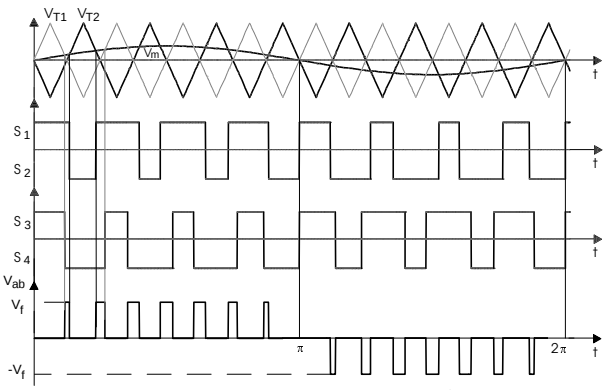

Fig. 2. Three level modulation technique employed for the Full-Bridge Voltage Source Inverter.

The control strategy is based on the sensor of the current I_{Lf} and its comparison with a reference current I_{LFref}. The resulting error is the input of an appropriate current controller. A sensor of the input voltage V_s multiplies the current controller output signal, resulting in a sinusoidal reference current i_{sref}. The reference current is compared to the input current and the resulting error is compared to the triangular signals, generating the drive signals to the switches.

III. Theoretical Analysis

A. Active Filter Employing the Full-Bridge VSI

The voltage V_f average value must be kept constant and higher than the input voltage peak value, in order to ensure the active filter proper operation.

The chosen voltage controller, shown in Fig. 5, is a proportional integral one, in order to ensure a null static error. It must be a slow controller, presenting a crossover frequency bellow the line frequency; otherwise the sinusoidal reference current i_{sref} will be distorted, as well as the input current. The voltage controller transfer function is defined by (1).

$$H(s) = \frac{V_c(s)}{V_a(s)} = \frac{-\left(1 + s\,C_{c1}\,R_{c2}\right)}{s\,C_{c1}\,R_{c1}} \tag{1}$$

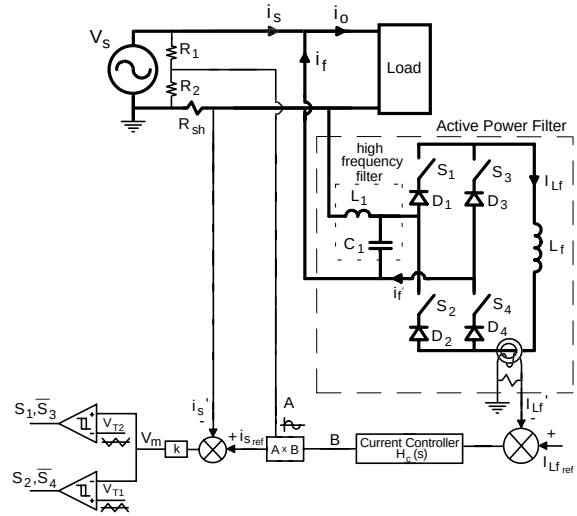

Fig. 3. Diagram of the Full-Bridge Current Source Inverter operating as an Active Power Filter and the proposed control strategy.

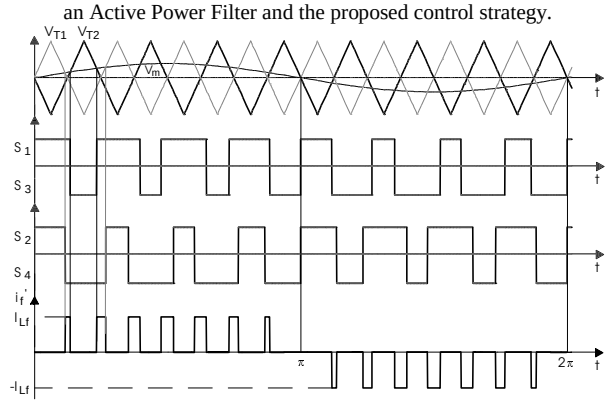

Fig. 4. Three level modulation technique employed for the Full-Bridge Current Source Inverter.

The inductor L_f current ripple Δi_f, presented in (2), varies along the line cycle and is dependent on the modulation index defined by (3). The maximum parameterized current ripple $\overline{\Delta i}_{f\,max}$ is also dependent on the modulation index. Equation (4) is used to calculate the inductance L_f. The choice of the maximum current ripple $\Delta i_{f\,max}$ depends on the load current harmonic contents. The bigger the load current harmonic distortion, the bigger should be the tolerated current ripple, otherwise the active filter will not compensate properly the load.

$$\begin{cases} \overline{\Delta i}_f = \dfrac{\Delta i_f\,L_f}{V_f\,T_s/2} = M_i \sin(\theta_s) - \left(M_i \sin(\theta_s)\right)^2 & \text{for } 0 \le \theta_s \le 2\pi \\ \overline{\Delta i}_f = \dfrac{\Delta i_f\,L_f}{V_f\,T_s/2} = -M_i \sin(\theta_s) - \left(M_i \sin(\theta_s)\right)^2 & \text{for } \pi \le \theta_s \le 2\pi \end{cases} \tag{2}$$

$$M_i = V_f / V_{s_{peak}} \tag{3}$$

$$L_f \ge \frac{\overline{\Delta i}_{f\,max}\,V_f}{2\,\Delta i_{f\,max}\,f_s} \tag{4}$$

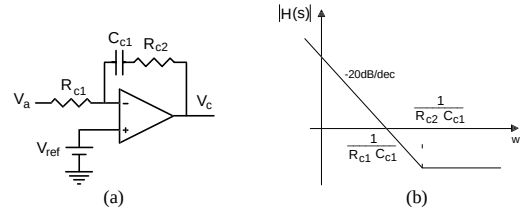

Fig. 5. Proportional integral controller (a) and its Bode diagram (b).

The inductor current-to-duty- cycle (D) transfer function is presented in (5). As can be noticed it is the same transfer function of the Boost pre-regulator. Thus the two poles one zero current controller, shown in Fig. 6, may be used. Its transfer function is defined by (6).

$$G_i(s) = \frac{\Delta i_{Lf}(s)}{\Delta D(s)} = \frac{-V_f}{s\,L_f} \tag{5}$$

$$H_i(s) = \frac{-(1+s\,R_{i3}\,C_{i1})}{R_{i2}\,(C_{i1}+C_{i2})\,s\left(1+s\,\frac{R_{i3}\,C_{i1}\,C_{i2}}{C_{i1}+C_{i2}}\right)} \tag{6}$$

The open loop transfer function is calculated according to (7).

$$F_i(s) = \frac{K_{is}}{V_{T\,pp}}\,G_i(s)\,H_i(s) \tag{7}$$

Where: K_{is}→the AC mains current sensor gain,
$V_{T\,pp}$ →the triangular signal peak-to-peak voltage.

B. Active Filter Employing the Full-Bridge CSI

The current i_{Lf} average value must be kept constant and higher than the input current peak value, in order to ensure the active filter proper operation.

The relation between the input current peak value and the current I_{Lf} average value defines the modulation index as shown in (8). The smaller the modulation index, the bigger the ability of the active filter to compensate for the loads.

$$M_i = \frac{i_{s\,peak}}{I_{Lf\,avg}} = \frac{V_{m\,peak}}{V_{T\,peak}} \tag{8}$$

Where: M_i→modulation index;
i_{speak}→input current peak value;
I_{Lfavg}→current I_{Lf} average value,
V_{mpeak}→modulation signal peak value;
V_{Tpeak}→triangular signal peak value.

The chosen current controller along with its Bode diagram is shown in Fig. 5 and its transfer function is presented in (1). The proportional integral controller ensures a null static error. Besides it must be a slow controller, presenting a crossover frequency bellow the line frequency, otherwise the sinusoidal reference current i_{sref} will be distorted as well as the input current.

IV. Design Methodology and Example

A simplified design procedure and example for the active filters employing the Full-Bridge VSI and CSI are presented in this Section.

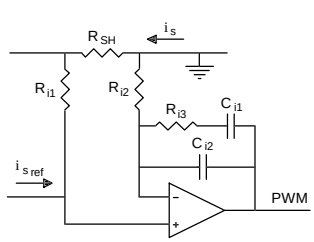

Fig. 6. Current controller.

A. Active Filter Employing the Full-Bridge VSI

The specifications are presented as follows: $V_{s\,peak} = 311V$ $f_{line} = 60Hz$ $P_o = 1600W$ $V_f = 400V$ $f_s = 30kHz$ $\Delta i_{f\,max} = 20\%\,i_{s\,peak}$

The modulation index and the inductor L_f maximum current ripple are calculated as shown bellow:

$$M_i = \frac{V_f}{V_{s\,peak}} = \frac{400}{311} = 0.7775$$

$$i_{s\,peak} = \frac{2\,P_o}{V_{s\,peak}} = \frac{2\times 1600}{311} = 10.3A$$

$$\Delta i_{f\,max} = 0.2\,i_{s\,peak} = 0.2\times 10.3 = 2.06A$$

The parameterized maximum inductor L_f current ripple is obtained deriving (2) for the calculated modulation index.

$$\overline{\Delta i}_{f\,max} = 0.25$$

The inductance L_f is calculated according to (4).

$$L_f \geq \frac{\overline{\Delta i}_{f\,max}\,V_f}{2\,\Delta i_{f\,max}\,f_s} = \frac{0.25\times 400}{2\times 2.06\times 30\times 10^3} \cong 810\mu H$$

The $G_i(s)$ transfer function is calculated using (5).

$$G_i(s) = \frac{\Delta i_f(s)}{\Delta D(s)} = \frac{V_f}{s\,L_f} = \frac{400}{s\times 810\times 10^{-6}} = \frac{494\times 10^3}{s}$$

The current controller is calculated as follows.

Choosing R_{i3} = 50kΩ and the current controller zero to be located at approximately 1kHz, the capacitor C_{i1} is calculated:

$$C_{i1} = \frac{1}{f_{zi}\,2\,\pi\,R_{i3}} = \frac{1}{1k\times 2\pi\times 50k} \cong 3.3\times 10^{-9}\,F$$

Choosing R_{i2} = 10kΩ and the current controller pole to be located at 30kHz, the capacitor C_{i2} is calculated as shown bellow.

$$C_{i2} = \frac{C_{i1}}{f_{pi}\,2\,\pi\,R_{i3}\,C_{i1} - 1} = \frac{3.3n}{30k\times 2\pi\times 50k\times 3.3n - 1} \cong 110\times 10^{-12}\,F$$

The resulting current controller transfer function is as follows:

$$H_i(s) = \frac{-(1+s\,165\mu)}{s\,34.1\mu\,(1+s\;5.33\mu)}$$

The open loop transfer function is calculated according to (7). The triangular signal peak-to-peak voltage is equal to 10V, and the AC mains current is sensored with a gain of 0.3.

$$F_i(s) = \frac{0.3}{10}\times\frac{494\times 10^3}{s}\times\frac{-(1+s\,165\mu)}{s\,34.1\mu\,(1+s\;5.33\mu)}$$

The open loop transfer function crossover frequency is about 10kHz, and the phase margin is about 65°.

A bank of capacitors (C_f) to be placed in the inverter DC side was chosen due to component availability. The resulting capacitance is 1.8mH/400V.

The voltage controller crossover frequency is 15Hz. Choosing R_{v1} = 47kΩ, the capacitor C_{v1} is calculated.

$$C_{v1} = \frac{1}{R_{v1}\,2\,\pi\,15Hz} = \frac{1}{47k\times 2\pi\times 15Hz} \cong 220nF$$

The voltage controller zero is placed in 80Hz. The resistor R_{v2} is calculated as shown bellow.

$$R_{v2} = \frac{1}{C_{v1}\, 2\pi\, 80\text{Hz}} = \frac{1}{220\times10^{-9}\times 2\pi\times 80\text{Hz}} \cong 10\text{k}\Omega$$

B. Active Filter Employing the Full-Bridge CSI

The specifications are presented as follows:

$V_{s_{peak}} = 311\text{V}$ $f_{line} = 60\text{Hz}$ $P_o = 1600\text{W}$ $I_{Lf} = 40\text{A}$
$f_s = 30\text{kHz}$

The input current for the load rated power, and the modulation index are calculated as follows:

$$i_{s_{peak}} = \frac{2\,P_o}{V_{s_{peak}}} = \frac{2\times 1600}{311} = 10.3\text{A}$$

$$M_i = \frac{i_{s_{peak}}}{I_{Lf}} = \frac{10.3}{40} = 0.2575$$

Defining the triangular signal peak value, the modulation signal peak value is obtained.

$$V_{T\,peak} = 5\text{V}$$

$$V_{m\,peak} = V_{T\,peak}\, M_i = 5\times 0.2575 = 1.288\text{V}$$

The high frequency input filter (L_1 and C_1) is calculated according to the following procedure.

$$f_c = \frac{f_s}{10} = 3\text{kHz} \Rightarrow w_c = 18850\,\text{rad/s}$$

$$\zeta = 1.0$$

$$R_{eq} = \frac{V_{s\,peak}}{i_{s\,peak}} = \frac{311}{10.3} = 30.2\Omega$$

$$C_1 = \frac{1}{R_{eq}\, 2\,\zeta\, w_c} = \frac{1}{30.2\times 2\times 1\times 18850} \cong 0.9\mu\text{F}$$

$$L_1 = \frac{1}{w_c^{\,2}\, C_f} = \frac{1}{18850^2\times 0.9\mu} \cong 3.13\text{mH}$$

Adjusting the filter by simulation: $\begin{cases} C_1 = 2\mu\text{F} \\ L_1 = 1.4\text{mH} \end{cases}$

The current controller crossover frequency is 30Hz. Choosing $R_{c1} = 22\text{k}\Omega$, the capacitor C_{c1} is calculated.

$$C_{c1} = \frac{1}{R_{c1}\, 2\pi\, 15\text{Hz}} = \frac{1}{22\text{k}\times 2\pi\times 30\text{Hz}} \cong 220\text{nF}$$

The current controller zero is placed in 80Hz. The resistor R_{c2} is calculated as shown bellow.

$$R_{c2} = \frac{1}{C_{c1}\, 2\pi\, 80\text{Hz}} = \frac{1}{220\times10^{-9}\times 2\pi\times 80\text{Hz}} \cong 10\text{k}\Omega$$

The inductance L_f to be placed in the inverter DC side was chosen to be 10mH.

V. Experimental Results

In order to verify the principle of operation and the control strategies, the designed prototypes were built. The active power filters were tested with the non-linear and multiple loads shown in Fig. 7.

A. Active Filter Employing the Full-Bridge VSI

The parameters and power component specifications are as follows: $V_{s_{peak}} = 311\text{V}$, f_{line}=60Hz, P_o=1600W, V_f=400V, f_s=30kHz, C_f = 1.8mF/400V, IGBTs ($S_{1,2,3,4}$): IRG4PC50W, L_f = 810μH - 40turns (6 x 20AWG) on 2xEE 65/39 core (gap=10mm), $D_{1,2,3,4}$: HFA15TB60.

In Fig. 8 and 9 the experimental results of the active filter compensating for a diode rectifier followed by a capacitive filter and a diode rectifier followed by an inductive load as shown in Fig. 7 (a) and (b), respectively, are presented. The active filter current compensates the non-linear loads current, resulting in a sinusoidal input current in phase with the input voltage. In Fig. 10 the experimental results of the active filter compensating for the multiple non-linear load shown in Fig. 7(c), are presented. As can be noticed the active filter is able to compensate for the load current phase displacement and the load current harmonic distortion at the same time. The resulting input current is sinusoidal and in phase with the input voltage. For all the loads the resulting power factor is superior to 0.99.

In Fig. 11 the experimental results for a step load change up and down are presented, for the active filter compensating the load of Fig. 7(a). As can be noticed, the active filter takes a few line cycles to adapt itself for the step load change. This is mainly because a high capacitance C_f was used, due to component availability. If a smaller capacitance were available, the dynamic performance would be improved.

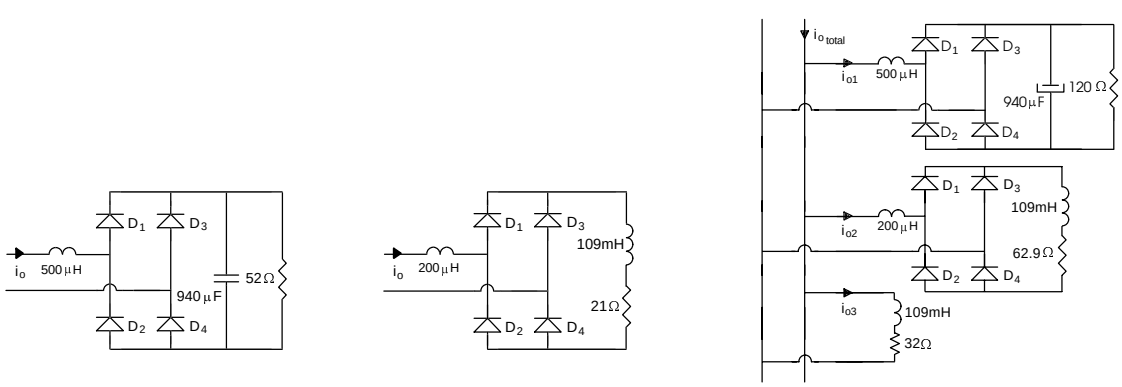

(a) (b) (c)

Fig. 7. Non-linear loads (a), (b); and multiple loads (c).

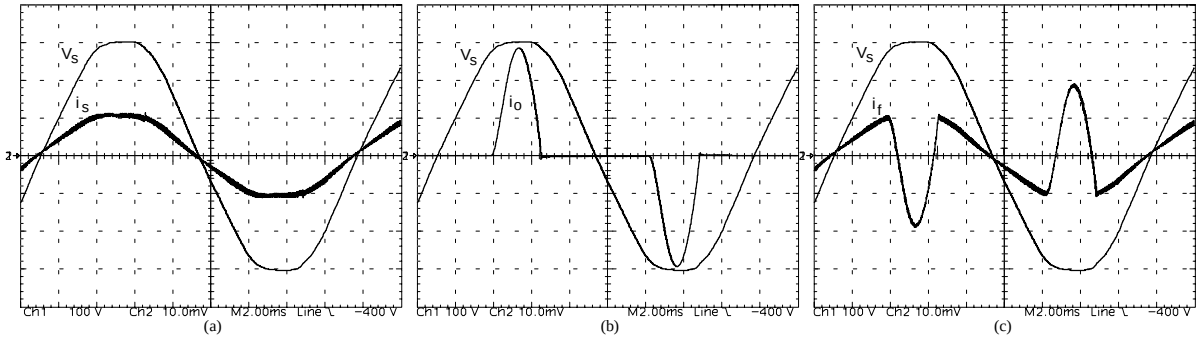

Fig. 8. Experimental results: (a) Input voltage (100V/div.) and input current (10A/div.), (b) load current (10A/div.), (c) active filter current (10A/div.).

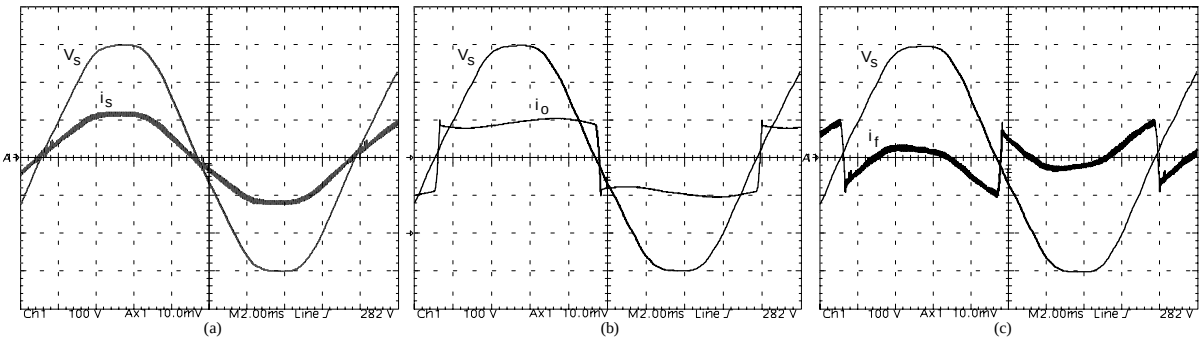

Fig. 9. Experimental results: (a) Input voltage (100V/div.) and input current (10A/div.), (b) load current (10A/div.), (c) active filter current (10A/div.).

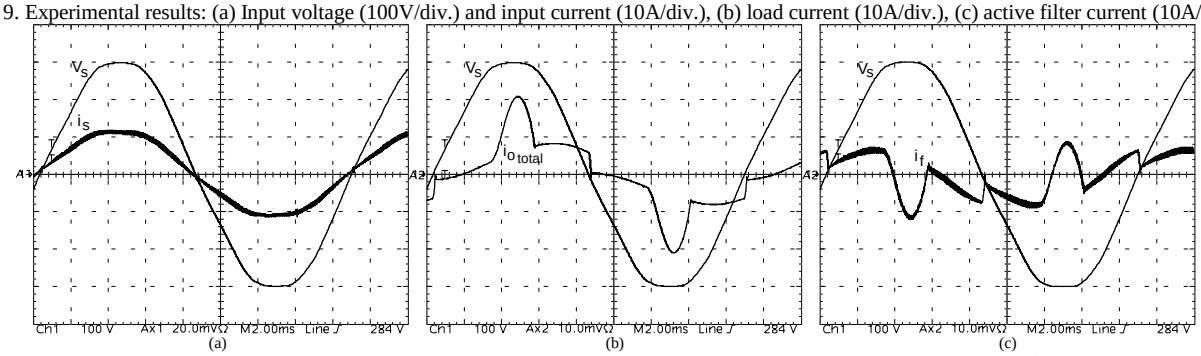

Fig. 10. Experimental results: Input voltage (100V/div.) and input current (10A/div.), (b) load current (10A/div.), (c) active filter current (10A/div.).

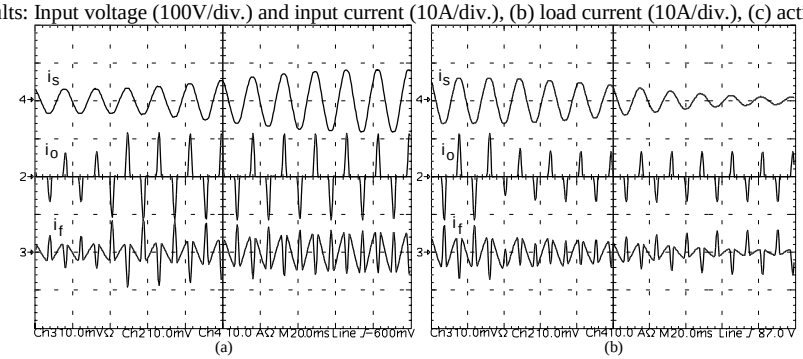

Fig. 11. Experimental results: Step load changes up (a) and down (b), input current (10A/div.), load current (20A/div.) and active filter current (20A/div.).

B. Active Filter Employing the Full-Bridge CSI

The parameters and power component specifications are as follows: $V_{speak} = 311V$, $f_{line} = 60Hz$, $P_o = 1600W$, $I_{Lf} = 40A$, $f_s = 30kHz$, $C_1 = 2\mu F / 280V\,(\text{polypropylen})$, $L_1 = 1.4mH$ -30 turns (5x14AWG) on 3.9cm Fe Si core(gap=0.8mm), $L_f = 10mH$ -48 turns (25x18AWG) on 6cm Fe Si core (gap = 0.2cm), IGBTs ($S_{1,2,3,4}$): IRG4PC50W, $D_{1,2,3,4}$: HFA50PA60C.

In Fig 12, 13 and 14 it is presented the experimental results of the active filter compensating for the loads of Fig. 7 (a), (b) and (c), respectively. The active filter current compensates the load current resulting in a sinusoidal input current in phase with the input voltage. For all the loads the resulting power factor is superior to 0.99.

In Fig. 12(a), 13(a) and 14(a) it can be noticed that the resulting input current is higher when compared to the VSI in Fig. 8(a), 9(a) and 10(a). This is due to the losses in the CSI, that are much bigger than in the VSI, not only because of the diodes in series with the switches, but also because the losses in an inductance are much bigger than in a capacitive bank.

In Fig. 15 the experimental results for a step load change up and down are presented, for the active filter compensating the load of Fig. 7(a). The active filter responds promptly for the step load change.

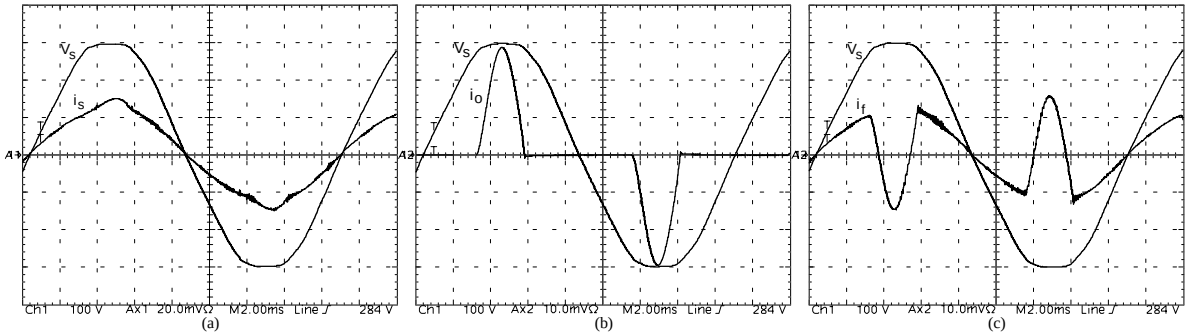

Fig. 12. Experimental results: (a) Input voltage (100V/div.) and input current (10A/div.), (b) load current (10A/div.), (c) active filter current (10A/div.).

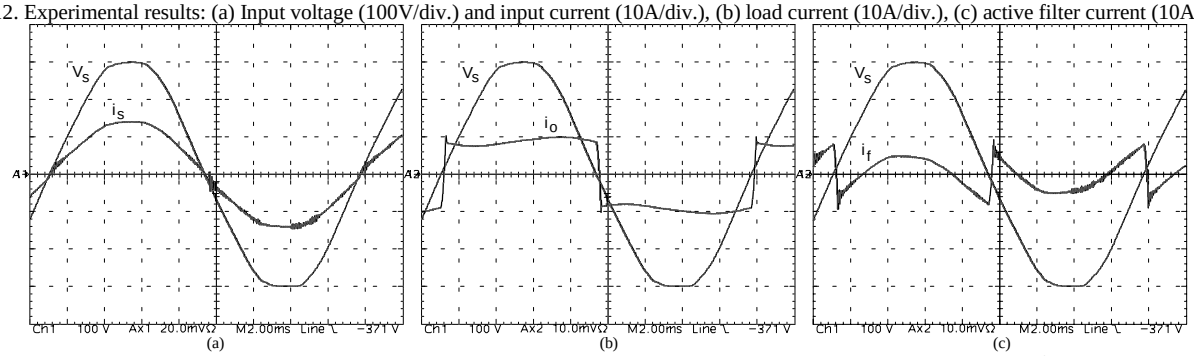

Fig. 13. Experimental results: (a) Input voltage (100V/div.) and input current (10A/div.), (b) load current (10A/div.), (c) active filter current (10A/div.).

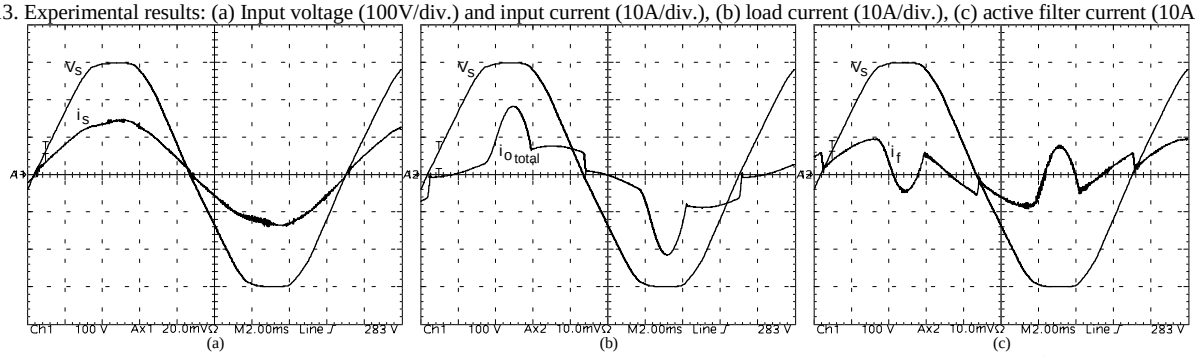

Fig. 14. Experimental results: (a) Input voltage (100V/div.) and input current (10A/div.), (b) load current (10A/div.), (c) active filter current (10A/div.).

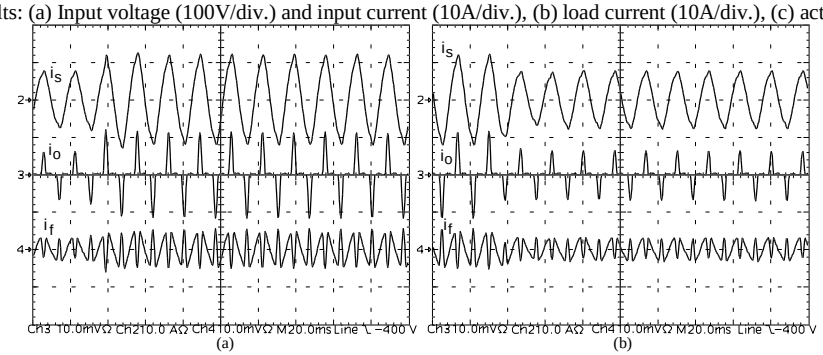

Fig. 15. Experimental results: Step load changes up (a) and down (b), input current (10A/div.), load current (20A/div.) and active filter current (20A/div.).

VI. Conclusion

In this paper active power filters based on the full-bridge voltage source and current source inverters are presented. The control strategies are very simple and are based on the sensor of the input current.

Theoretical analysis, design examples and experimental results for the active filters compensating non-linear and multiple loads are presented, validating the analysis.

The main characteristics of the presented active filters are: the ability to compensate for the load current harmonic distortion and the load current phase displacement; a high power factor is achieved; the resulting input current is in compliance with the IEC 61000-3-2 standard; a good dynamic performance.

VII. References

[1] C. Y. Hsu, H. Y. Wu, “A new single-phase active power filter with reduced energy storage capacitor”, IEEE PESC’95, pp. 202-208.

[2] D. A. Torrey, A. Al-Zamel, “Single-phase active power filters for multiple nonlinear loads”, IEEE Transactions on Power Electronics, Vol. 10, pp. 263-271, may 1995.

[3] I. Barbi, F. Pöttker, “Power Factor Correction of Non-Linear Loads Employing a Single Phase Active Power Filter: Control Strategy, Design Methodology and Experimentation”, IEEE PESC’97, pp. 412-417.

[4] H. I. Yunus and R. M. Bass, “Comparison of VSI and CSI Topologies for Single Phase Active Power Filter”, IEEE PESC’96, pp. 1892-1898.

[5] I. Barbi and F. Pöttker de Souza, “Power Factor Correction of Linear and Non-Linear Loads Employing a Single-Phase Active Power Filter Based on a Full-Bridge Current Source Inverter Controlled through the Sensor of the AC Mains Current”, IEEE PESC’99, pp. 387-392.