Solar Energy Based Public Area Illumination System

N. N. Franceschetti, E. B. Schonwald, M. Godoy Simões
University of São Paulo
EPUSP - PMC / Mecatrônica
Av. Prof. Mello Moraes, 2231-CEP:05508-900, S. Paulo/SP
E-mail: [nfrances, ericbs, mgs]@usp.b

***Abstract* - This work presents the development of a solar powered public illumination system used for a waste recycle campaign in the city of Sao Paulo: a lighting pole installed in streets for area illumination with translucent sign vinyl, shining in the sun and glowing at night with fluorescent lamps, stainless steel receptacles are used as recycle trash bin collectors at the base of the pole. The use of a photovoltaic panel to power the glassy advertisement not only works as a way to bring solar energy to a daily use but also to encourage companies for funding a broad recycle awareness campaign.**

During the day, the solar energy is captured by a photovoltaic solar panel and delivered into a lead-acid battery through a flyback converter. The converter also performs the function of tracking the maximum power operating conditions. At night the fluorescent lamp is driven by a resonant push-pull current-fed inverter. The system is controlled with an inexpensive RISC PIC16C74 microcontroller, which searches the maximum power point by commanding the flyback converter with a hill-climbing algorithm, monitors the battery energy level, and turns on the fluorescent inverter with a real-time internal clock. Serial communication is provided for connection to a portable computer, which is used for battery life management and time clock settings. It is shown the implementation of the whole system and the comprehensive field tests in this paper.

I. Introduction

The overwhelming word energy demand due to the modern industrial society and populational growth is motivating a lot of investments in alternative energy solutions aiming to improve energy efficiency and power quality issues. Photovoltaic energy is a primary resource because there are several countries located in tropical and temperate regions where the direct solar density may reach up to 1 Kw/m^2. Two main restrictions for using solar energy are the high initial installation costs and a very low photovoltaic cell conversion efficiency, which ranges from 12% up to a maximum of 29% (for very expensive units). In spite of this fact, there has been a trend in price decreasing for modern power electronics systems and photovoltaic cells, indicating good promises for new installations. The maximum power of a photovoltaic system changes with temperature, solar intensity and load. In order to amortize the initial investments it is very important to extract the maximum power in a continuous basis, which makes necessary a microprocessor, based power electronics controlled system to adjust the solar panel electrical impedance dynamically.

This paper describes the implementation of a photovoltaic system, which has the capabilities of searching the solar array optimum operating point to deliver maximum energy into a battery. The battery is used for powering a current-fed resonant fluorescent system for area public illumination. The system is controlled with an inexpensive RISC PIC16C74 microcontroller, which searches the maximum power point by commanding the flyback converter with a hill-climbing algorithm, monitors the battery energy level, and turns on the fluorescent inverter with a real-time internal clock. Serial communication is provided for connection to a portable computer, which is used for battery life management and time clock settings. The system is constructed with a light pole fashion, used on streets for a public waste recycle advertising campaign.

II. The Solar Electric Illumination System

Solar energy is being applied in several residential, industrial and other applications. A low cost grid connected system is presented in [1], a power factor correction system, where a microcomputer searches the maximum power, is discussed in [2]; other schemes have been proposed as well: an hysteresis active power controller for solar array [3], solar-powered vehicles [4] [5], analytical modeling for solar cells based on manufacturing data [6], and fuzzy based peak power track controllers [7] [8], duty-cycle controled topologies are discussed in the literature with analogic and digital implementations [9] [10] [11].

The present system has an ultimate goal: a photovoltaic panel should power a shiny advertisement installed in an electric pole. Not only it is a way to bring solar energy into a daily use, but has also been used in the present application to encourage companies to fund a broad recycle awareness campaign. The solar panel allows a light pole to be installed anywhere, without connection to the utility grid. Fig. 1 depicts the system: the pole has a length of 3 meters, two or more recycle collectors fixed at 1 meter from bottom. A vinyl translucent cylinder, with a screen-printed sign, is illuminated by a fluorescent bulb; the sign is used as a way to sponsor a waste recycle community program.

Fig. 2 shows the block diagram for the electrical system indicating the PIC16C74 microcontroller, which is responsible for the photovoltaic power transfer algorithm optimization, and works by adjusting the flyback duty-cycle. The processor has a real-time clock to turn on the fluorescent lamp, in programmed time; the time settings

can be changed by the serial communication channel, which also sends information about the battery conditions. If there is not enough collected photovoltaic energy, the microcontroller does not permit full battery depletion.

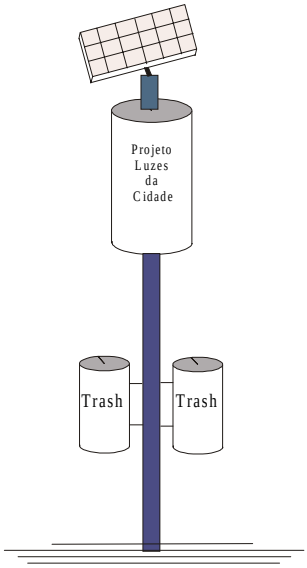

Fig. 1. Illustration of the solar pole

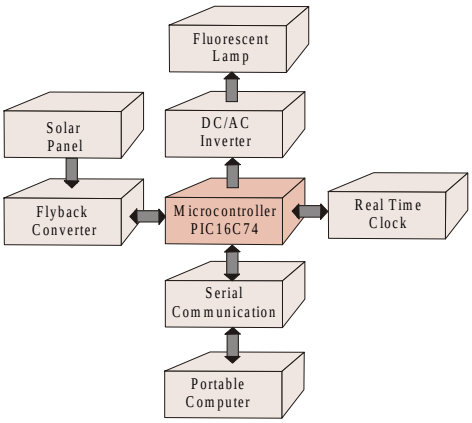

Fig. 2. System block diagram

III. Solar Panel Specification

Solar panel specification depends on the need of the energy to be trasnferred into the battery bus, cell efficiency and overall costs; the panel power also depends on the battery charge capacity and internal losses, as given by Equ. 1:

$$P_p > P_c + P_i \qquad (1)$$

where: P_p is the panel power (W), P_c is the charge dissipated power (W) and P_i the internal control circuit losses (W).

Mereorological conditions, plane-of-array irradiance area, convertion efficiency, module temperature and illumination intensity afftec the collect power. The solar array area (cells quantity) can normally be chosen freely, depending on the manufacturing process cells can be made with efficiency ranging from 12% to 29%. The environment temperature affects the solar panel voltage, with a decrease of 0.05V/^{o}C per cell. The illumination intensity directly depends on the solar panel latitude location, and the sun irradiation depends on the day, month and weather factors, like rain, fog, and atmospheric pollution [9]. The power density at Equator line, at noontime and 25°C corresponds to 1000 W/m^2. Therefore, the ilumination intensity in any point of Earth can be approximated by Equ. 2:

$$\lambda = 1000\cos(\theta) \qquad (2)$$

where λ is the illumination intensity (W/m^2) and θ is the latitude.

Since battery specifications are usually given in *A.hour* the reasoning used was: with the illumination intensity λ it is possible to estimate the charge delivered into a battery, using a standard 12% efficiency solar array as the one summarized in Table I. The maximum cell current supplied in ideal conditions is 1.38 A, which means that one 42 *A.hour* discharged battery would need 30 hours to be fully charged. The current generated by such solar panel, in a sunny day in São Paulo city during Summer, is approximately 9 *A.hour*, which allows a 20W fluorescent lamp to stay on for 6 hours.

Table I: Solar panel characteristics

Manufacturer	Siemens
Model	M20
Maximum power	20W
Nominal current	1,38A
Nominal voltage	14,5V
Short circuit current	1,60A
Open voltage	18,0V
Dimension of by cells covered area	0.52m x 0.31m
Cells area	1.61 m^2

IV. Principles of Power Transfer Optimization

Fig. 3 shows the characteristic family of curves for a solar array. One can see that the maximum power point

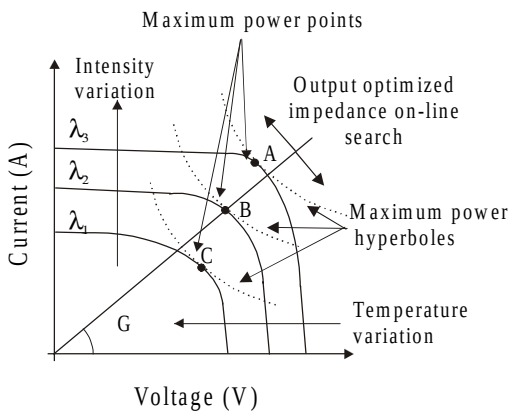

Fig. 3. Search method for solar panel power maximization by programmable duty-cycle.

changes with solar intensity (λ) and temperature variation; the maximum power occurs when its voltage-current touches the maximum power hyperbole locus [12] represented by the points A, B and C points in the figure. Power collected by the panel is given by the intersection of the load line, with conductance G, and the characteristic curve V x I. To get maximum transfer a circuit connected between the solar array and the battery bus must change the conductance G. This is the main function of the control algorithm: to vary the flyback converter duty-cycle, so as to optimize this transference in real-time.

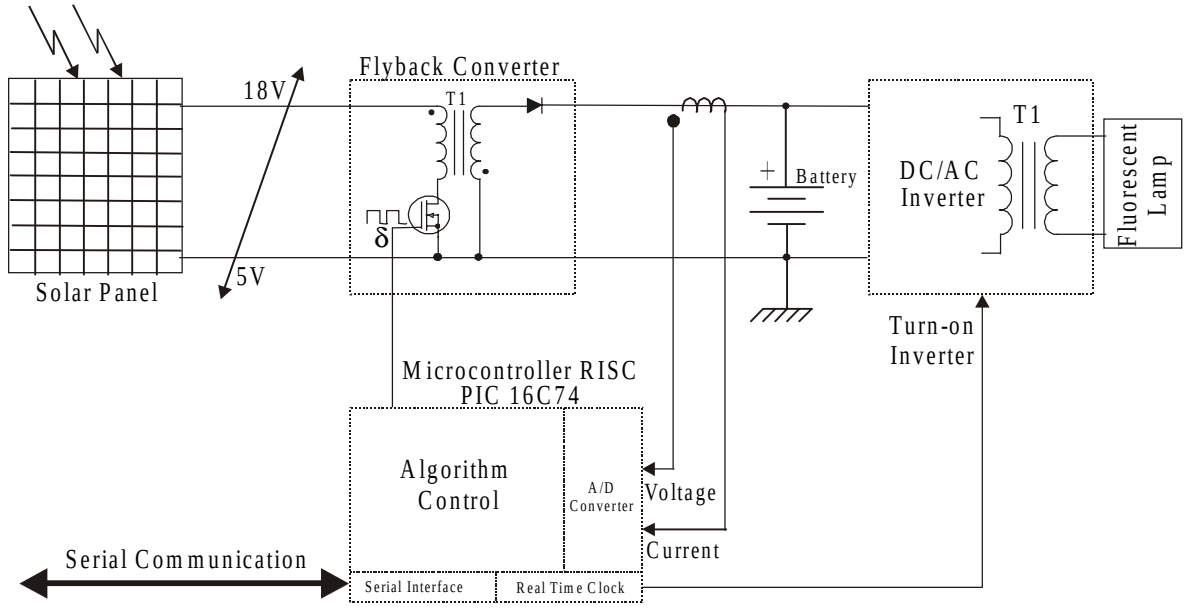

Fig. 4. Simplified diagram of photovoltaic system

V. System Implementation

A block diagram of the Solar Pole is shown in Fig. 4. The flyback converter allows that solar panels with different voltage values can be used, through the right specification of the T1 primary winding and providing output compatible voltage. The voltage at the output of this converter type is always higher than the input, and it is determined by the transistor switching duty-cycle control.

In this work, the converter duty-cycle (the ratio between transistor conduction time and switching period) variation is controlled by a closed loop control algorithm: the instantaneous computed power defines if duty-cycle should be increased or rather reduced, until the settlement of the optimum point. The flyback converter has a Power-MOSFET transistor commanded by a PWM signal generated by RISC PIC16C74 microcontroller. The tracking algorithm is basically a real time routine that measures the current and voltage in the battery where a hill-climbing algorithm indicated in Fig. 5 is used, the instantaneous power is estimated and a step-by-step search maximizes the solar panel power transfer.

The last 32 powers readings are averaged the power variation (ΔP) is compared with the last variation in order to decide if the duty-cycle must be increased or reduced. When the power variation is close to zero, the duty-cycle remains in its optimum value since the maximum power has been attained. . The flyback converter waveforms are presented in Fig. 6, showing a power flow of 14 W, the battery current is shown with the transformer seconday current and the Power-Mosfet terminal voltage.

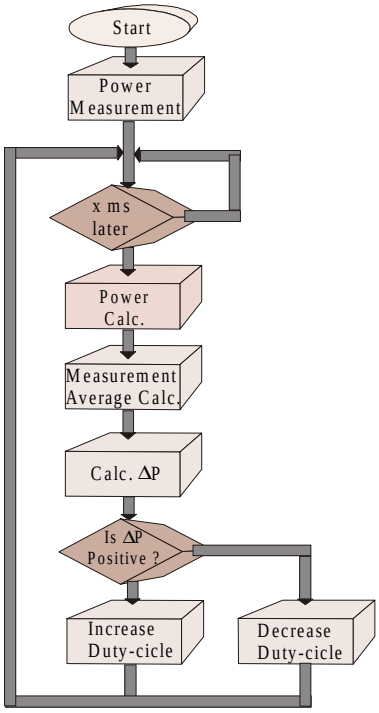

Fig. 5. Control algorithm structure

The collected power is delivered into a 12V lead-acid battery which stores energy for a resonant fluorescente lamp inverter [13] schematized in Fig. 7. It is a Baxandall push-pull current-fed inverter, optimized for low dc voltage application with extremely low losses.

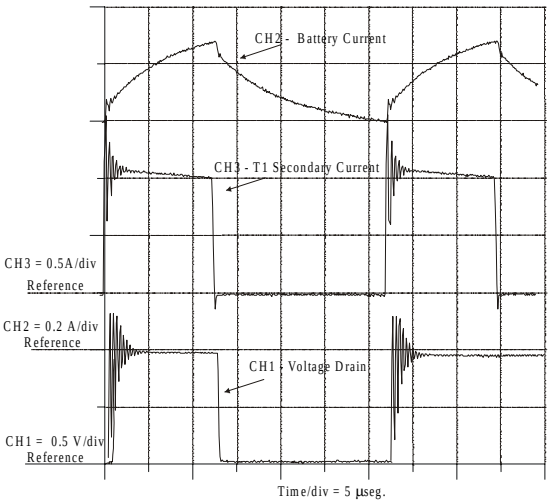

Fig. 6. Flyback converter results

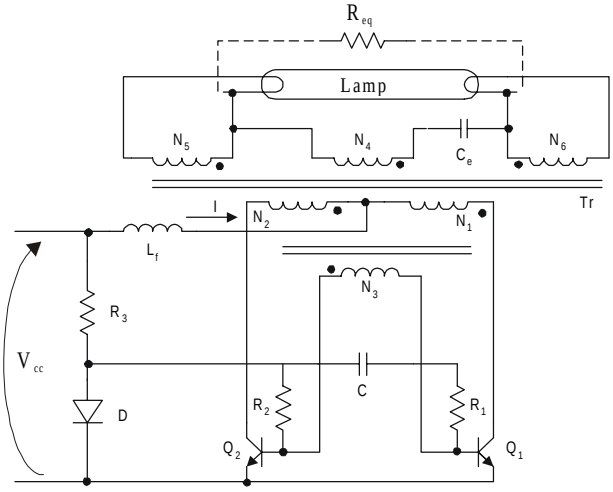

Fig. 7. Resonant inverter with capacitive stabilization

The inverter maintains nominal luminous flow for a small power applied to the lamp saving energy. For ballast design purposes, a fluorescent lamp operating at high frequency can be represented by an equivalent resistacne load. Such value was obtained in laboratory using a variac and a photoelectric cell. It was adopted a 83% of nominal power, which offers a global efficiency increase of approximately 30% when compared to conventional commercial systems using electromagnetic reactors. Q1 and Q2 transistors conduct alternately, with 50% duty-cycle and are switched by the self-oscillating circuit: N3 winding and base connected R3, D, R1 and R2; the ZVS (Zero Voltage Switching) mode at turn-on and turn-off keeps switching losses low. The Fig. 8 shows the experimental waveform results for Q1 and Q2 collector voltage.

The start-up does not need any special initialization circuit, because R2-Q2 and R1-Q1 branches are not fully symmetric, which implies that only one of the transistors will conduce initially, imposing constant current to the circuit by N1 or N2 windings of the primary of the transformer Tr.

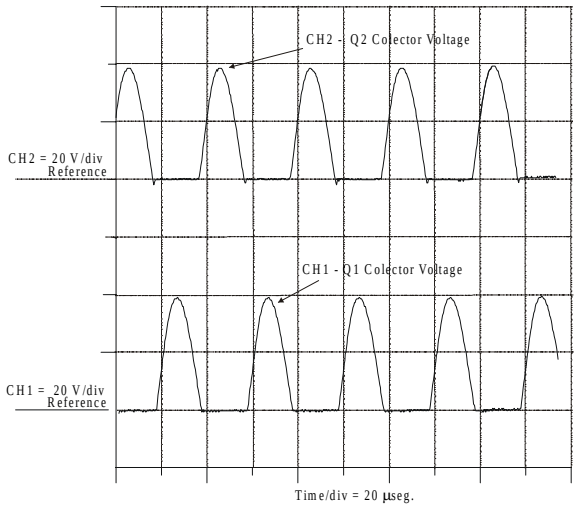

Fig. 8. Inverters of fluorescent lamp results

The capacitor C indicated in figure with transformer magnetization inductance determine the non-load (without lamp) circuit operation frequency. N5 and N6 winding have the function for preheating the lamp filament and, during the starting, there is not current in high voltage winding N4, until the filament temperature reaches the adequate value for electron emissions. The loaded (lamp turned on) operation frequency is determined by Req, transformer magnetization inductance, C capacitance and by lamp current stabilization element, that can be capacitive or inductive. Equations 3 and 4 present equivalent resistance and stabilization element calculus method, respectively.

$$r_{eq} = \frac{(\pi \cdot V_{cc})^2}{8 \cdot P} \tag{3}$$

$$c_e = \frac{1}{2 \cdot \pi \cdot f_d \cdot r \cdot Q} \tag{4}$$

where: P is the lamp nominal power (W), f_d is lamp operation frequency (Hz), r is lamp resistance seen by principal circuit (Ω) and Q is the quality factor (dimensionless).

VI. Laboratory and Field Tests

The solar pole photovoltaic system was intensivelly submitted for laboratory and in field tests. Laboratory tests were done in two phases. Initially the maximum power point was obtained by variation of the duty-cycle manually. This was accomplished by imposing to the flyback converter switch a PWM signal generated by a National LM3524-type modulator. The solar panel was substitute on this first phase by a programmable power supply to simulated different solar intensity levels. The tracking algorithm was debugged with this set-up and then applied in a second phase several field tests where the illumination intensity was measured with a laboratory gauged cell (1000W/m^2 related to the terminal voltage). Fig. 9 present two power curves for the flyback converter

submitted for 5.5W. First curve shows the input power and the second to output power delivered to battery. The maximum power was obtained when duty-cycle was 44% of switching period. It can be observed yet that difference between input and output power is somewhat related to the circuit efficiency, which was during all the tests a 96% average.

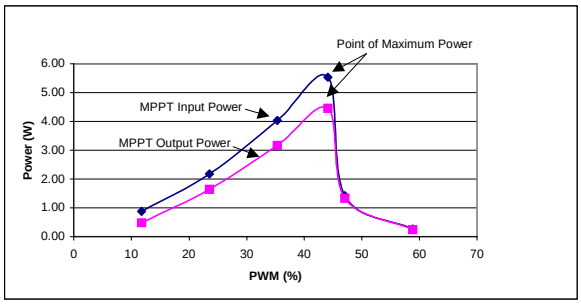

Fig. 9. Laboratory test for 5.5W input power

Figures Fig. 10, Fig. 11 and Fig. 12 show flyback converter output power curves when submitted to 10W, 14W and 18W respectively. For each level of power a different duty-cycle value was attained in order to optimize power transference.

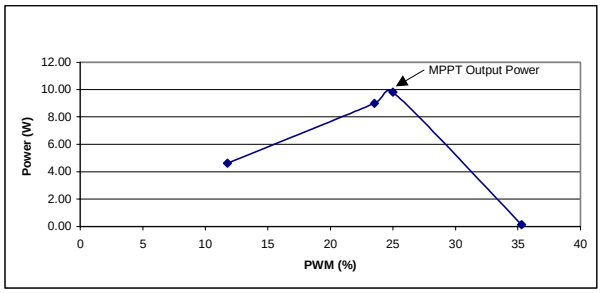

Fig. 10. Laboratory test for 10W input power

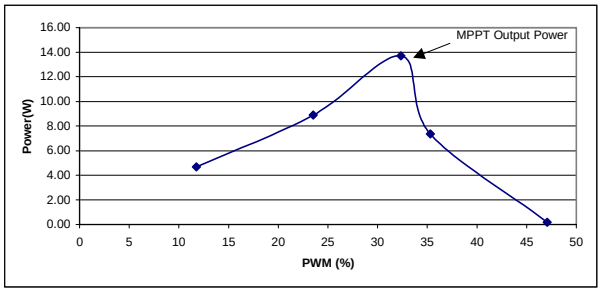

Fig. 11. Laboratory test for 14W input power

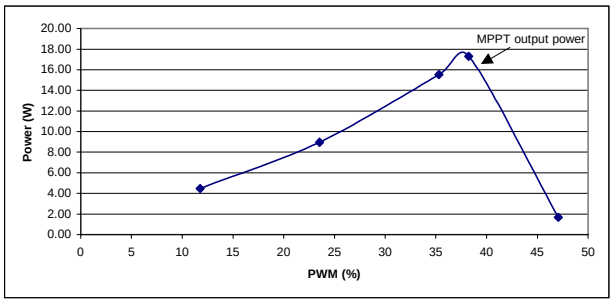

Fig. 12. Laboratory test for 18W input power

Fig. 13 presents voltage and current values that limit system operation area. The manual PWM was substituted by the microcontroller and the system was submitted to same levels of current and voltage. It was observed the correct operation of the maximum power point tracker algorithm, always reaching the same duty-cycle value obtained manually.

Fig. 14 depicts two field test curves with power estimated and measured in the flyback converter output. The curves represent measurements during December 1998 in a sunny day in São Paulo City.

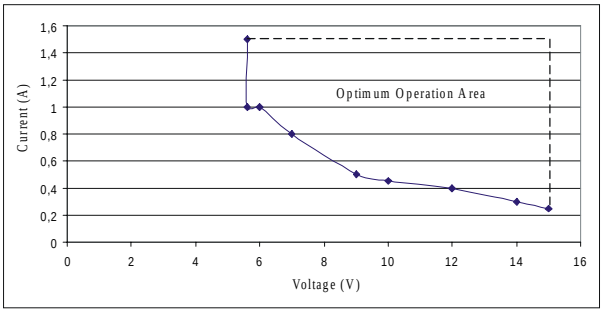

Fig. 13. Flyback converter optimum operation area

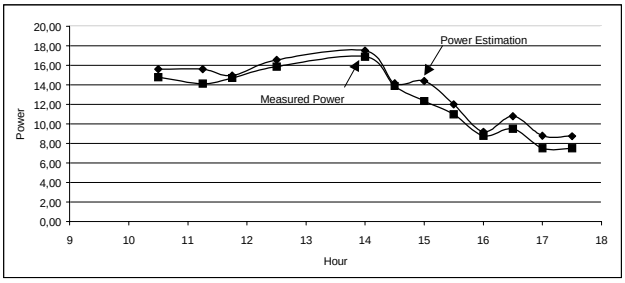

Fig. 14. Estimated and measured power during a day

VII. Conclusions

This work presented a circuit topology capable of maximum peak power tracking for a solar array with a microcontroller. The microcontroller also performed the functions of battery monitoring and a push-pull current fed resonant fluorescent inverter command. A flyback converter was connected the solar array to the battery, and the optimum duty-cycle value was searched by a hill-climbing algorithm. A serial communication was provided to connect the microcontroller to a portable PC used for battery life management and real-time clock settings. The whole system was implemented and tested in laboratory and subjected to comprehensive field tests, showing an average efficiency of 96%, industrial robustness and promises for paralleling for high power needs.

VIII. Acknowledgement

This project has been supported by FAPESP and by the "*Projeto Luzes da Cidade*" managed by TwinLight.

IX. References

[1] M. Andersen, B. Alvsten, "A 200W low cost module integrated utility interface for modular photovoltaic energy systems" IEEE-IECON International Conf. on Ind. Electr. Cont. and Inst., vol I, pp. 572-577, Sept. 1995

[2] B.K. Bose, P.M. Szczesny and R.L. Steigerwald, "Microcomputer control of a residential photovoltaic power conditioning system," IEEE Ind. Appl. Soc. Annual Meeting, pp. 852-859, Sept. 1984

[3] J.H.R. Enslin, D.B.Snyman, "Combined low-cost, high-efficient inverter, peak power tracker and regulator for PV applications" IEEE Trans. on Power Eletronics, vol 6, pp. 73-82, Jan. 1991

[4] C.R. Sullivan, M.J. Powers, "A high efficiency maximum power point tracker for photovoltaic arrays in a solar-powered race vehicle", IEEE Power Electronics Specialists Conf., pp. 574-580, 1993

[5] D.J. Patterson, "Electrical system design for a solar powered vehicle" IEEE Power Electronics Specialists Conf., pp. 618- 622, 1990.

[6] N.N. Franceschetti, L.O.M. dos Reis, M. Godoy Simões, "Modelagem e Simulação da Transfência de Potência de um Sistema Fotovoltaico" Congresso Brasileiro de Eletrônica de Potência – COBEP, pp. 275-280, Dec. 1997

[7] M. Godoy Simões, N.N. Franceschetti, M.Friedhofer, "A Fuzzy Logic Based Photovoltaic Peak Power Tracking Controller" IEEE International Symposium on Industrial Electronics, pp. 300-305, July 1998.

[8] R.M. Hilloowala, A.S. Sharaf,. "A Rule-Based Fuzzy Logic Controller for a PWM Inverter in Photo-Voltaic Energy Conversion Scheme" IEEE Industrial Applications Society, pp. 762-769, Jan. 1992.

[9] N.N. Franceschetti, "Sistema de Acionamento e Controle de Veículo Elétrico Movido a Energia Solar", Dissertação de mestrado, Escola Politecnica da USP. São Paulo, 1998.

[10] P. Midya, P.T. Krein, R.J. Turnbull, R. Reppa e J. Kimball, "Dynamic maximum power point tracker for photovoltaic applications" IEEE Power Electronics Specialists Conf., vol II, pp 1710-1716, July 1996

[11] W.J.A. Teulings, J.C. Marpinard, A. Capel, D. O'Sullivan, "A new maximum power point tracking system" IEEE Power Electronics Specialists Conf., pp 833-837, June 1993

[12] Raushenback, "Solar cell array design Handbook," vol. I, II, Jet Propulsion Laboratory, 1976

[13] J. A. Sierra, W. Kaiser, "Comparison of fluorescent lamp stabilization methods in the current-fed push-pull inverter" IEEE-IAS Annu. Meeting Conf. Rec., pp. 2099-2104, St. Louis, October 1998