System Filter Design Method Using the Behavioral Averaged PWM Switch Model

V. M. Canalli•♦, J.A.Cobos, J.A. Oliver, F. S. dos Reis• and J. Uceda

PUCRS/FENG/DEE•
CEP 90619-900 - Porto Alegre, RGS - Brazil
vicente@ee.pucrs.br

UPM/ETSII/DIE
28006 – Madrid - Spain
cobos@upmdie.upm.es

UCS/CCET/DEMEC♦
CEP 95070-560 – Caxias do Sul, RGS – Brazil
http://www.ucs.tche.br

Abstract - **In a system filter design is important not only provides the necessary ripple attenuation to the load subsystem input current, but to guarantee the small-signal stability. System small-signal stability may be assured, with an adequate design of filter input and output impedances. This study is actually complicated because that is need a set of parameters that are required to evaluate small-signal transfer functions and closed and open-loop impedances at converter and system levels. Due to this fact many kinds of analysis must be considered in the system design (steady state, small-signal and large signal). Also as a consequence of problem complexity there are not so many approaches including filter design. Most of them are partial solutions, because of the large number of variables involved and the difficulty to define a set of restrictions at system level. In this paper we propose a computational method and expressions to design a system with filter, using simulation results of the Behavioral Averaged PWM Switch model [1]-[2], some tools available in the multilevel simulator [2] and a specifically developed program.**

I. INTRODUCTION

Nowadays many efforts are made for simulation, analysis and design of distributed power systems (DPS), containing filters.

Many problems are detected by the system designer, that make complicated this study very complex using the classical methods, because of many factors as typical tradeoff among accuracy and computation time in complex systems. The Behavioral Averaged PWM Switch is a model applicable to DC-DC switching converters operating in any conduction mode, which was proposed in [1]. This three terminal model was implemented using a multilevel simulator [2], replacing the transistor and diode of these converters. This model is applicable in steady state, small-signal and large signal tests, with systems that contain open and closed loop units. Evaluation tools at system level, such as spectral analyzers and others available in multilevel simulators and Behavioral Averaged PWM Switch, allows resources to a complete computational filter design, considering both, ripple attenuation and system stability.

In this paper four contributions to the problem of filter design are presented.

These contributions are based on the example of the circuit shown in figure 1 and summarized as follows:

I) A filter design methodology that may be extensible to other system topologies.

II) Determination of one expression to compute the resonance frequency of the filter, including the effects of the ESR of filter capacitor.

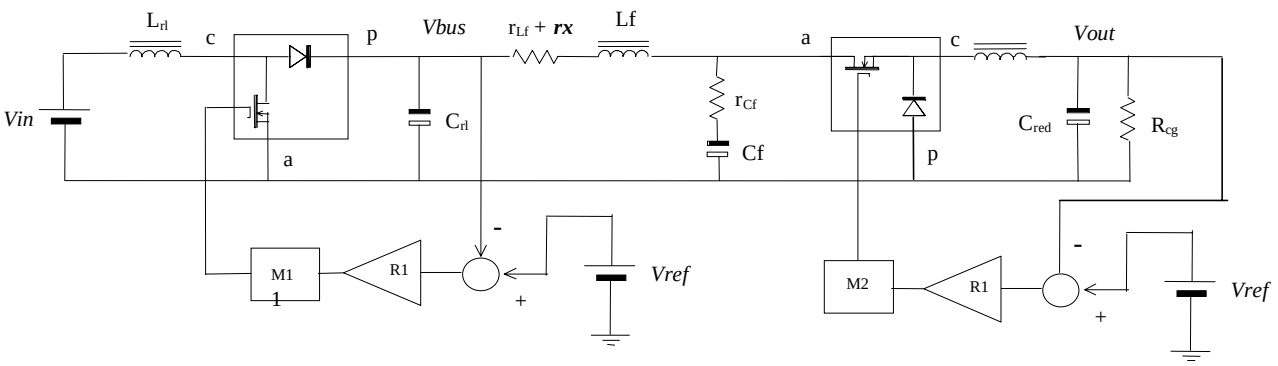

Figure 1. System structure example studied in this paper.

The calculation is based upon the filter capacitor value, and the theoretical filter damping factor (ξ), filter attenuation frequency (f_{At}) and minimal filter attenuation in dB ($At_{min\ dB}$) (see figure 2).

III) Determination of a set of two equations, solved in a developed mathematical program that provide the filter inductance Lf, and damping resistance rd, that must to be used to fulfill the filter transfer function specifications.

IV) Application of the behavioral averaged PWM Switch proposed in [1], for the calculation of the switching converter transfer functions of regulated units and also for the system analysis and automatic computational design based upon the system loop gain *Tm=Zo/Zin* studied in [3]-[10].

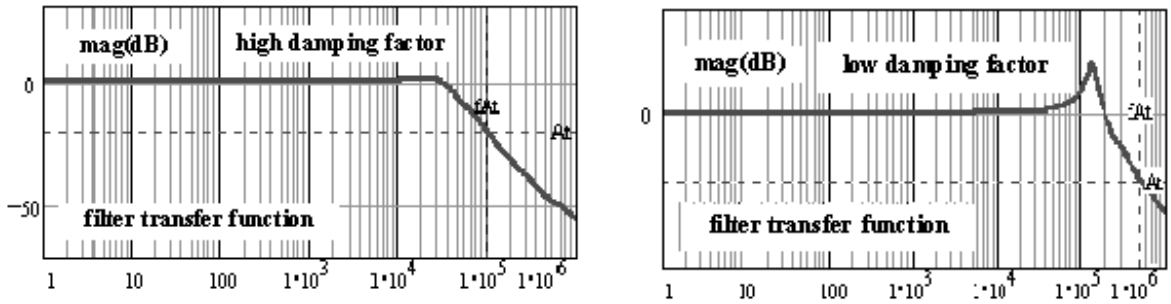

(a)Influence of damping factor over filter transfer function.
(transfer function of (a) and (b) are automatically designed for distinct f_{At} and At)

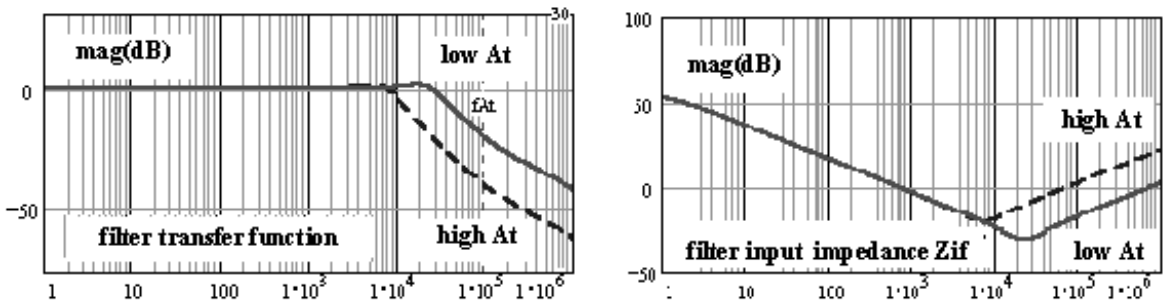

(b) Influence of attenuation over filter transfer function and input impedance (Zif)

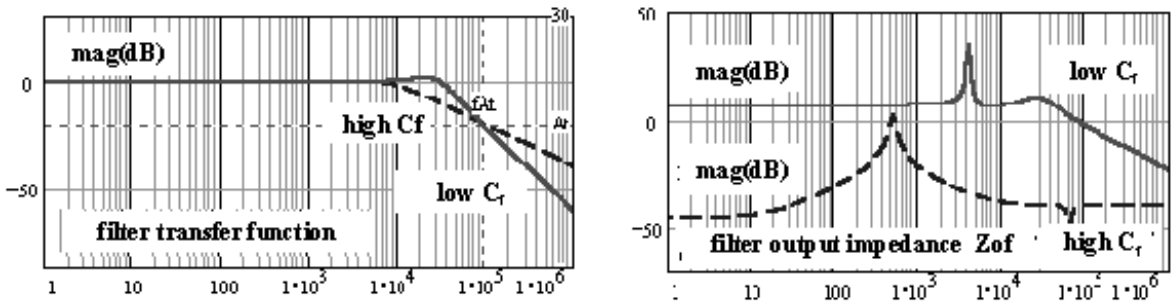

(c) Influence of Cf over filter transfer function and output impedance (Zof)

Figure 2. Influence of design parameters in filter design.

II. Input Data for Filter Design Method

The input data selected for *automatic filter design* are important for to insure the necessary *ripple attenuation for input current of load subsystem* and also the *system small-signal stability*. In this paper, the filter prototype is *automatically designed* for provides an adequate *attenuation (At)* in a given *attenuation frequency (f_{At})*, as is illustrated in figure 2a.

Also the filter damping factor (ξ) is used in this design, because that it has influence over the filter attenuation around of resonant frequency (see figure 2a), and must be chosen for provides an small peak in filter transfer function. Into stability design has importance the value of filter capacitance (Cf) and filter inductance (Lf). In our design method the inductance value (Lf) is directly related with filter

attenuation (At) as represented in figure 2b. An increment in filter attenuation (At), causes an elevation in filter input impedance (Zif).

In the main cases the value filter capacitance (Cf), alters directly the filter output impedance (Zof) as illustrated in figure 2c, where an increment of Cf capacitance low the filter output impedance (Zof).

III. Expressions for Automatic Filter Design

Generic expressions were derived for to design automatically the system filter. Initially the filter resonant frequency (fo) is calculated using the proposed input data and the R_{DC} value (that is the load converter DC operating point-input resistance). The $At_{min\ dB}$ value that was not yet commented, represents the minimal attenuation designed for the filter at f_{AT}..

$$20\log\left\{\frac{R_{dc}}{R_{dc}+\left(r_{Lf}+rd\right)}\cdot\left|\frac{\left[j\left(2\pi\, f_{At}\right)\cdot C_f\cdot r_{Cf}+1\right]}{1+j\cdot 2\cdot\xi\cdot\frac{\left(2\pi\, f_{At}\right)}{\left(2\pi\, fo\right)}-\left[\frac{\left(2\pi\, f_{At}\right)}{\left(2\pi\, fo\right)}\right]^2}\right|\right\}=At_{min}$$

Once that the filter resonant frequency (fo) is calculated, the filter inductance (Lf) and damping resistor (rd) are given solving the following set of two equations :

$$\frac{C_f\cdot L_f\cdot\left(R_{dc}+r_{Cf}\right)}{R_{dc}+\left(r_{Lf}+rd\right)}=\frac{1}{\left(2\pi\, fo\right)^2}$$

$$\frac{C_f\cdot\left(r_{Lf}+rd\right)\cdot\left(R_{dc}+r_{Cf}\right)+L_f+R_{dc}\cdot C_f\cdot r_{Cf}}{R_{dc}+\left(r_{Lf}+rd\right)}=\frac{2\cdot\xi}{2\pi\, fo}$$

IV. Design Example

As example we present the design of the system illustrated in figure 1. The system input voltage Vin is equal to 30V, bus voltage Vbus is 48V and system output voltage Vout is 24V. For system design were performed the next steps :

a)Design of regulated converters using Behavioral Averaged PWM Switch and a Program for Automatic Calculation of Regulator oriented to switching converters application. Initially the system units are designed using the Behavioral Averaged PWM Switch that is used in computational determination of switching converters transfer function and also in large-signal fast test of regulators that are designed.

A computational program was developed for automatic calculation of prototypes to switching converter regulator.

b) Filter initial specifications

A filter transfer function represented with dotted lines in figure 3, is assumed to an initial filter design.

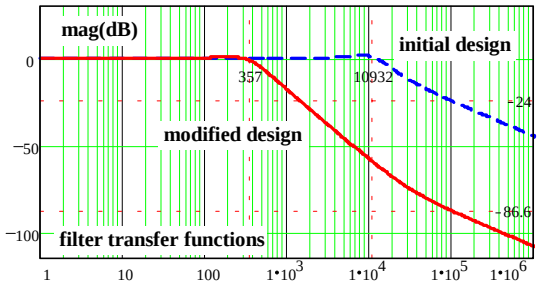

Figure 3. Filter transfer functions.

Initial specifications are the *minimal attenuation* At = -24dB, f_{At}=100kHz and ξ =0.5. The attenuation value was determined making an spectral analysis in the load converter input current, and ξ was choosing for provides a small resonant peak in the filter transfer function. The Cf initial value was calculated using a classical expression that depends upon the buck converter parameters (the load converter).

Thus we have :

$$C_f = 820uF \quad rse_{Cf} = 0.01\Omega \quad R_{dc}=23\Omega$$

The program implemented calculates :

$$L_f = 258uH,\ r_{Lf} + rd = 0.008 \text{ with } fo\cong 10932Hz$$

These filter parameters specification, give the filter transfer function represented with dotted lines in figure 3.

c) Converters closed loop impedances derivation using Behavioral Averaged PWM Switch

The next step is to study the system design for small-signal stability and minimal performance degradation (modular design) [3]-[10].The small signal stability study is based on diagram of figure 4. Converters input Zic and output Zoc closed-loop impedances of figure 4, were simulated using the Behavioral Averaged PWM Switch model.

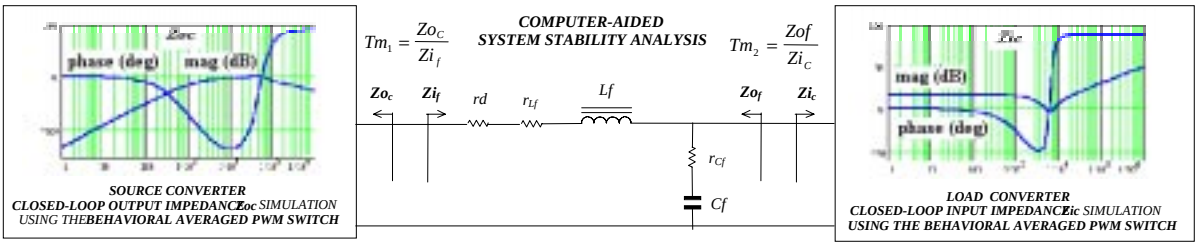

Figure 4. Studying the small-signal stability of a system with filter.

d) Filter small signal stability analysis

Analyzing the Tm Nyquist plots illustrated in figure 5 derived to the initial design), we see that the first system interface of figure 4, does not presents a good impedance separation.

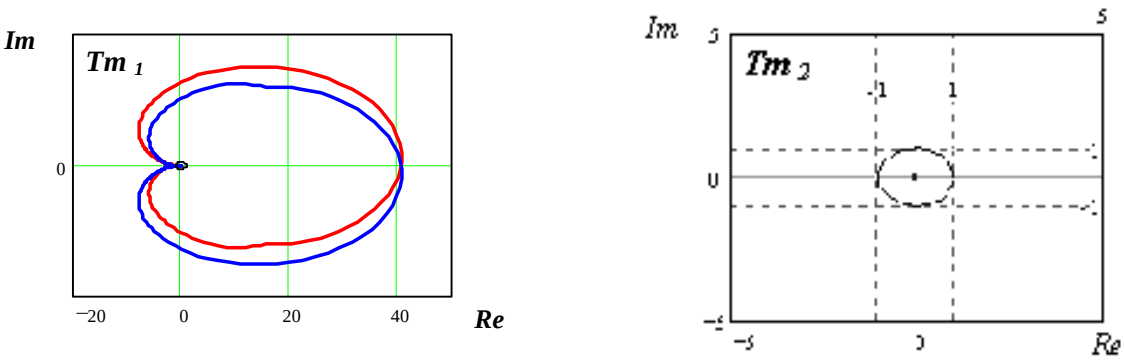

Figure 5. Nyquist plots of the system loop gain in system interfaces.

e) Filter small signal stability design

Searching now the separation of impedances in both system interfaces, the filter parameters are adjusted to:

C_f =560uF, ξ =0.6 and At =-86.6 dB.

The new filter transfer function is represented in entire lines in figure 3 and allows to change the filter input and output impedances (Zif and Zof), as illustrated in figure 6. Filter inductance Lf and rd damping resistor are calculated using the same program based on expressions (1), (2) and (3), resulting:

r_{Lf} + rd = 0.95Ω, L_f =368uH with fo≅357Hz.

These new filter parameters allow to adjust the two system loop gain Tm (see figures 4,7 and 8) and filter input (Zif) and output (Zof) impedances (see figure 6), from dotted-line to entire-line characteristics, providing the appropriated interface impedance separation, and consequently designing the system for *small-signal stability and minimal performance degradation*.

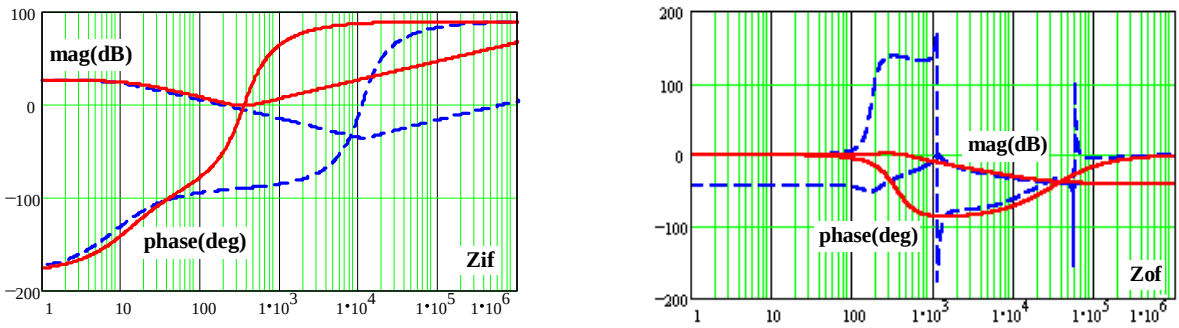

Figure 6. Filter input and output impedances.

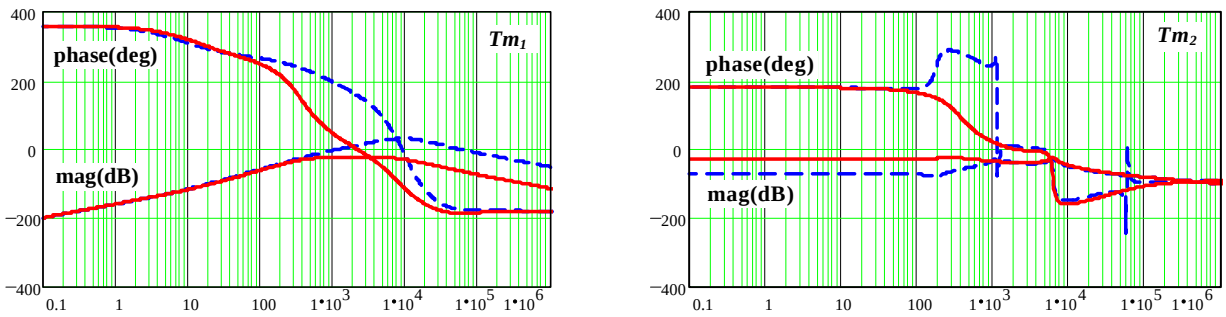

Figure 7. System loop gain designed for system small-signal stability and modularity.

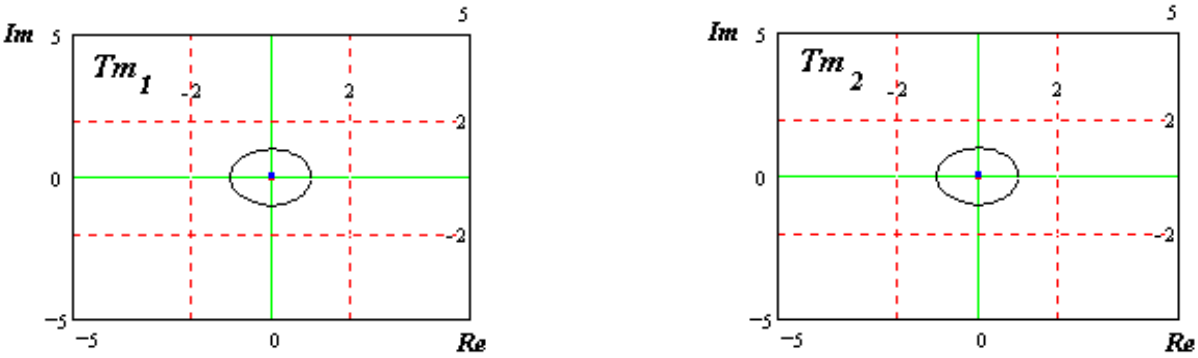

Figure 8. Nyquist plot designed for system small-signal stability and modularity.

V. Conclusions

The main advantage of the Behavioral Averaged PWM Switch model in the system design is that it offers in one single model elements to the steady state, small-signal and time Domain studies, in both conduction modes. This capability is useful system design and test.

Also the multilevel simulator where the model was implemented, offers many simulation tools to the system analysis and design. A computational method and expressions for filter parameters calculation are given based on initial specifications established by the system designer.

Thus the small-signal design and stability [11], may be studied and compared using simulation results of Behavioral Averaged PWM Switch model and a multilevel simulator. Also mathematical programs are used with advantages allowing system analysis and automatic design.

VI. References

[1] Canalli V.M, Cobos J.A.,Oliver J.A.,Uceda J., “Behavioral Large Signal Averaged Model for DC/DC Switching Power Converters”, Power Electronics Specialists Conference 1996, pp. 1675-1681.

[2] Canalli V.M., Cobos J.A., Prieto R., Uceda J., Olías E., “Large Signal Modeling and Simulation of Distributed Power Systems”, IECON 1996 Taipei Taiwan.

[3] Franz G. A., Ludwig G. W., Steigerwald R. L., "Modeling and Simulation of Distributed Power Systems", IEEE Power Electronics Specialists Conference, 1990,p.p. 606-610

[4] Middlebrook R.D., "Input Filter Considerations in Design and Application of Switching Regulators", IEEE Industry Applications Society Annual Meeting, 1976 Record, pp.366-382

[5] Lee F.C., Wildrick C.M., Cho B.H.,Choi B.,"A Method of Defining the Load Impedance Specification for a Stable Distributed Power System",Virginia Power Electronics Conference 1993, pp. 271-277

[6] Lazbin I., Needhan B.R.,"Analysis of the Stability Margins of the Space Station Freedom Electrical Power System", IEEE Power Electronics Specialists Conference 1993, pp. 839-845

[7] Lee F.C., Sable D.M., Cho B.H., "Spacecraft Power System Compatibility and Stability for the NASA EOS Satellite", Virginia Power Electronics Conference 1992, pp.169-174

[8] Lee F.C., Schulz S.,Cho B.H., "Design Considerations for a Distributed Power System", IEEE Power Electronic Specialists Conference1990, pp. 611-617

[9] Lee F.C., Lewis L.R.,Carpenter B.A.,Cho B.H., "Modeling Analysis and Design of Distributed Power Systems", IEEE Power Electronic Specialists Conference 1989, p.p.152-159

[10] Lee F.C., Cho B.H., “Modeling and Analysis of Spacecraft Power Systems”, IEEE Power Electronics Specialists Conference 1985, pp. 523-534.