# A Three-phase Voltage Source Boost Inverter Induction Motor Drive

Eduardo F. R. Romaneli and Ivo Barbi
Federal University of Santa Catarina
INEP- Power Electronics Institute
romaneli@inep.ufsc.br - http://www.inep.ufsc.br

**Abstract - This paper deals with a three-phase voltage source boost inverter, supplied from a DC source, driving a squirrel cage induction motor. The main characteristic of this topology is that the AC output voltage is increased and inverted in a single stage. The RMS output voltage can be greater than DC input voltage in opposite to classical inverters where output voltage is always lower. Variable speed was implemented using V/f constant technique. Theory and experimental results from a laboratory prototype are presented.**

## I - INTRODUCTION

When it is desired to feed an induction motor under variable speed from a bank of batteries (input voltage lower than motor voltage), two stages of power processing are used, as shown in Fig. 1.

Depending on power and output voltage involved, in spite of its simplicity, this solution has some disadvantages as a high number of components, cost, volume and low efficiency.

This paper proposes a new voltage source inverter with objective of reducing those problems and generates a sinusoidal AC output voltage with variable level and frequency.

The new structure has the following advantages if compared to traditional arrangement:

- ♦ Voltage is increased and inverted simultaneously in the same power stage;
- ♦ High quality sinusoidal output;
- ♦ Bi-directional energy flow;
- ♦ Current mode input;
- ♦ Lower number of power switches;
- ♦ Independent phase voltage;
- ♦ Lower volume and cost;
- ♦ Unique control strategy.

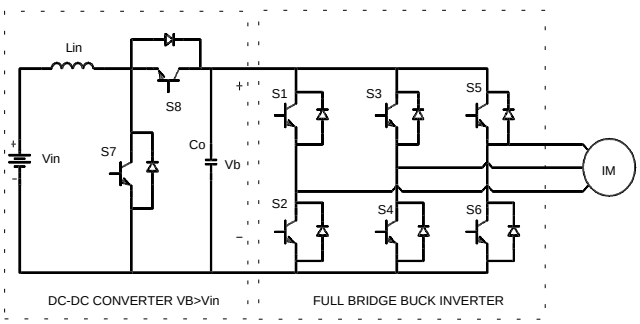


Fig. 1 – Simplified diagram of current solution.

## II - INVERTER DESCRIPTION

This structure proposes to increase and invert input voltage in one single stage. This principle has been discussed in [1] and [2] using Cuk converter. It is achieved by connecting three bi-directional boost converter each of them operating 120$^o$ phased, load is differentially connected, as shown in Figure 2.

The basic converter is composed of two power switches S1 and S2, two diodes D1 and D2, boost inductor L1, filter capacitor C1 and input source Vin. All the three converters generate the same DC offset, always higher than input voltage, then it is modulated by a voltage reference. Each converter operates individually producing a biased sinusoidal voltage.

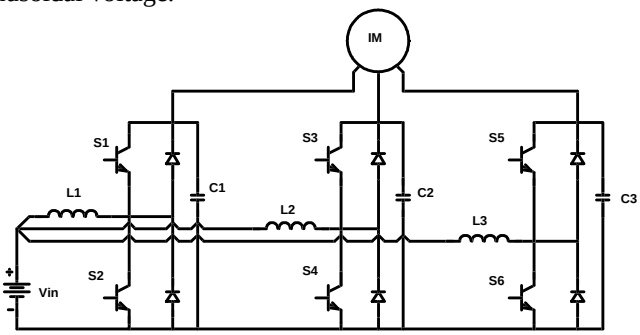


Fig. 2 - Simplified schematics of proposed solution.

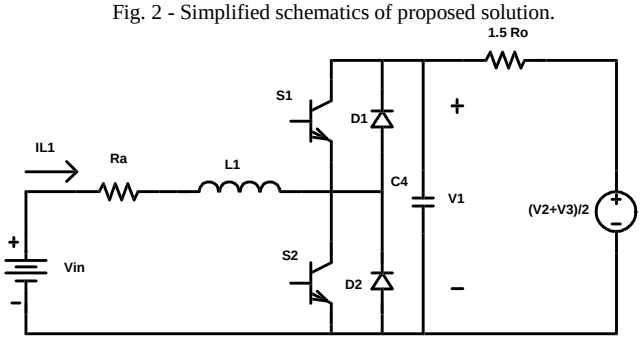


Fig.3 - Equivalent model.

Converter operation is very simple and it is presented on Fig. 4.

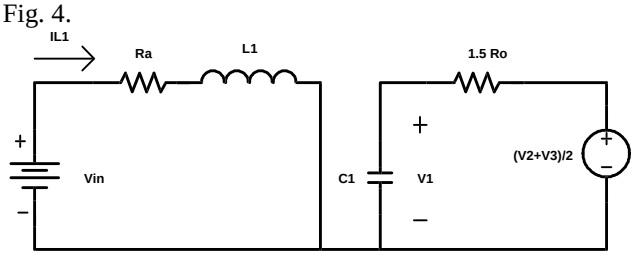


Fig 4 - S1 ON, S2 OFF

$$L_1 \cdot \frac{dIL1}{dt} = Vin - Ra \cdot IL1 \qquad (1)$$

$$C_1 \cdot \frac{dV1}{dt} = \frac{V2+V3}{3 \cdot Ro} - \frac{V1}{1.5 \cdot R_o} \qquad (2)$$

When S1 is closed current flows through boost inductor L1. Energy is stored at inductor L1. At this time load is supplied by capacitor C1 and voltage V1 decreases. Current increases through S1 if current IL1 is positive or decreases through D1 if it is negative. If it is positive, current IL1 increases; other else it decreases.

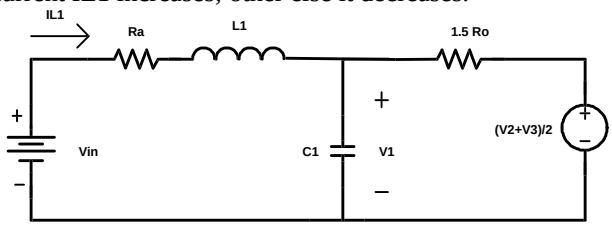


Fig 5 - S1 OFF S2 ON

$$L_1 \cdot \frac{dIL1}{dt} = Vin - Ra \cdot IL1 - V1 \qquad (3)$$

$$C_1 \cdot \frac{dV1}{dt} = IL1 + \frac{V2+V3}{3 \cdot Ro} - \frac{V1}{1.5 \cdot R_o} \qquad (4)$$

Where:

- IL1 – Current through inductor L1;
- V1 – Voltage across C1;
- Vin – Input source;
- Ra – Series resistance of L1;
- Ro – Y connected load;
- C1 – Output filter capacitor;
- V2 – Output voltage of converter 2 (phase 120$^o$);
- V3 – Output voltage of converter 3 (phase –120$^o$).

At the time that S2 is closed, energy stored in inductor L1 is transferred to capacitor C1. Current flows through S2 if current IL1 is positive or through D2 if it is negative. If it is positive, capacitor C1 is charged and voltage V1 increases; other else capacitor C1 is discharged and voltage V1 decreases.

## III – CONTROL STRATEGY

For purpose of optmizing the inverter dynamics, while ensuring correct operation on any working condition, sliding mode control was chosen due to its robustness to parameters variations, fast response to load changes and simple implementation.

Control operation is simple. Output voltage V1 and inductor current IL1 are measured and compared to its respective reference, error signals are multiplied by constant gains K1 and K2. Adding them generates a sliding curve. This signal passes through a comparator (H) with histeresys (δ) which output drives the power switches S1 and S2 complementarily. Switching frequency is variable. Entire controller was designed using commercial operational amplifier and comparators.

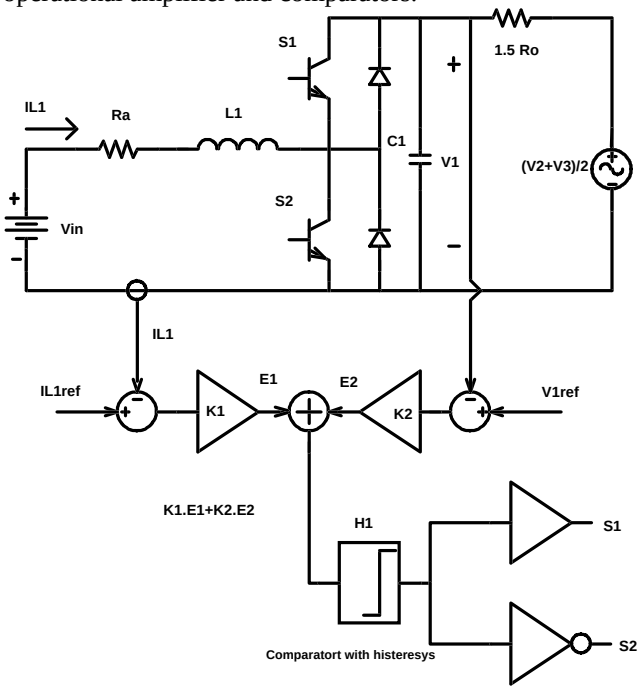


The state space modelling of the equivalent circuit with state variable IL1 and V1 gives:

$$\begin{bmatrix} \frac{dIL1}{dt} \\ \frac{dV1}{dt} \end{bmatrix} = \begin{bmatrix} -\frac{Ra}{L1} & -\frac{1}{L1} \\ \frac{1}{C1} & -\frac{1}{1.5 \cdot C1 \cdot Ro} \end{bmatrix} \cdot \begin{bmatrix} IL1 \\ V1 \end{bmatrix} + \begin{bmatrix} \frac{V1}{L1} \\ -\frac{IL1}{C1} \end{bmatrix} \cdot \delta + \begin{bmatrix} \frac{Vin}{L1} \\ \frac{V2+V3}{3 \cdot Ro \cdot C1} \end{bmatrix}$$

$$V' = A \cdot V + B \cdot \delta + C \qquad (5)$$

Sliding mode controller can be obtained applying the procedures already shown in [3]. It results:

$$\frac{K1}{L1} \cdot (Vin - Vref - Ra \cdot ILref) + \frac{3 \cdot K2}{2 \cdot C1 \cdot Ro} \left( \frac{V2+V3}{2} - Vref + Ro \cdot ILref \right) < 0 \qquad (6)$$

$$\frac{K1}{L1} \cdot (Vin - Ra \cdot ILref) + \frac{K2}{1.5 \cdot C1 \cdot Ro} \cdot \left( \frac{V2+V3}{2} - Vref \right) > 0 \qquad (7)$$

Where ILref and Vref are references of IL1 and V1.

Design procedure consists on finding values to K1, K2, L1 and C1 that ensure that these inequalities are always true to any operation condition. Values calculated to converter 1 are the same to converter 2 and 3.

## IV - EXPERIMENTAL RESULTS

A laboratory prototype was built in order to test the design procedure The prototype had the following parameters:

- Vin = 96 V;
- Vo = 115 VAC@60Hz;
- Fo = 15 to 60 Hz;

- ♦ L1 = 800 μH;
- ♦ C1 = 40 μF;
- ♦ K1 = 0.15;
- ♦ K2 = 0.025;
- ♦ δ = 0.3V;
- ♦ fs = 15kHz to 35 kHz;
- ♦ V1ref = 300 + 8/3·fo·sin(wt);
- ♦ V2ref = 300 + 8/3·fo·sin(wt+120$^o$);
- ♦ V3ref = 300 + 8/3·fo·sin(wt-120$^o$).

Reference voltage levels are proportional to desired output frequency. So the induction motor is controlled using a constant v/f technique.

Voltage V1, V2 and V3 are directly measured on respective filter capacitor and currents through inductors L1, L2 and L3 are measured using hall sensors. Filter capacitors must have the smallest series impedance and current sensor must be the most reliable as possible. High quality measurements are very important to keep system stability. S1 to S6 are 600V 40A ultra-fast IGBT with soft recovery diodes. No soft switching technique was implemented. All measurements were taken using a commercial 1.5 HP three-phase induction motor.

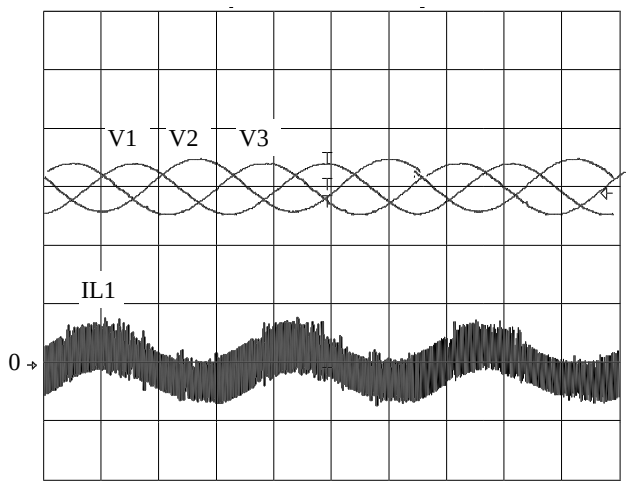


*V1, V2 ,V3 – 100 V/div IL1 – 5 A/div 10ms/div*

Fig.7 – Voltages V1, V2, V3 and current IL1 @ 15 Hz.

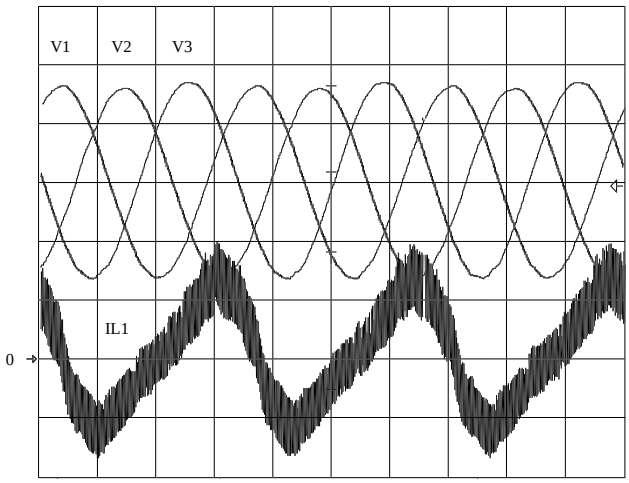


*V1, V2, V3 – 100 V/div IL1 – 5 A/div 5ms/div*

Fig.8 – Voltages V1, V2, V3 and current IL1 @ 60 Hz.

Inverter behaviour can be observed on Figures 7 and 8 when operating with no load. Output voltages V1, V2 and V3 and current though inductor L1 are shown. Output voltages are all DC biased as expected.

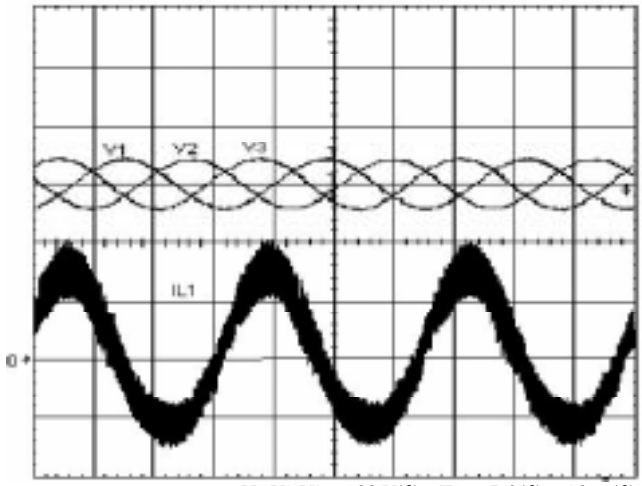


*V1,V2,V3 – 100 V/div IL1 – 5 A/div 20ms/div*

Fig.9 – Voltages V1,V2,V3 and current IL1 @ 15 Hz.

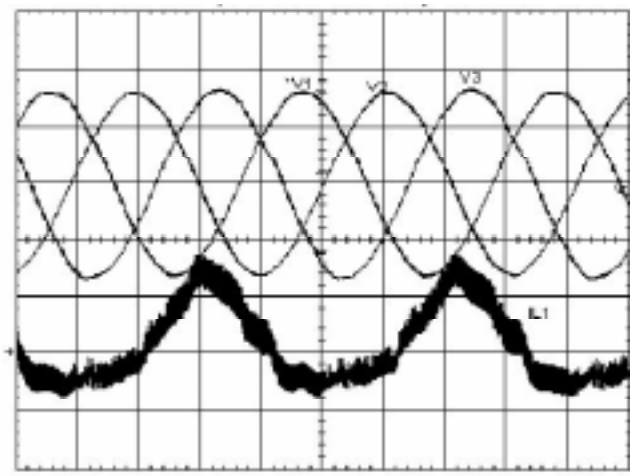


*V1, V2, V3 – 100 V/div IL1 – 5 A/div 4ms/div*

Fig.10 – Voltages V1, V2, V3 and current IL1 @ 60 Hz.

Figures 9 and 10 shows inverter operating with nominal load. Output voltages V1, V2, V3 and current through inductor L1 can be observed at two operation frequencies. When operating at 15 Hz inverter is supplying ¼ of nominal power, full power is only achieved at 60 Hz. This is the most critical operation point where are more reactive flow and higher output power. Switches and diodes specifications must be defined at this point.

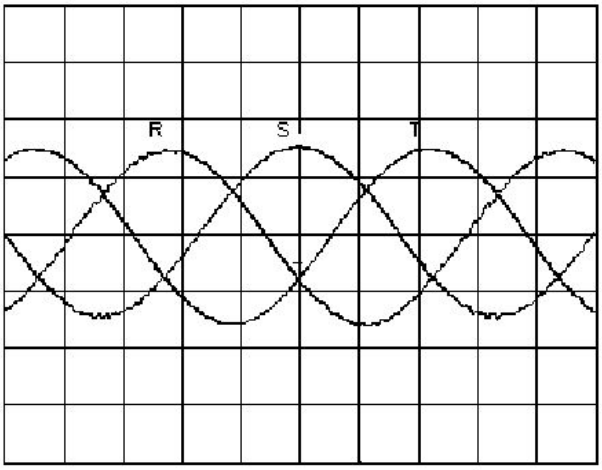


*50 V/div 20ms/div*

Fig.11 – Line voltages @ 15 Hz.

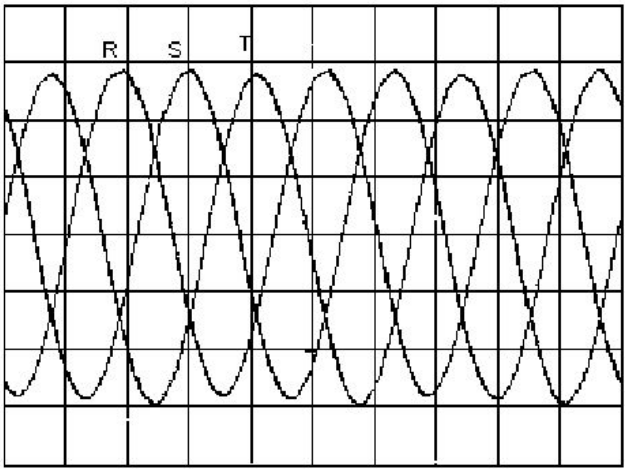


*100 V/div 5ms/div*

Fig.12 – Line voltages @ 60 Hz.

Figures 7 and 8 show line differential voltages V12, V23 and V31 when the inverter is operating at 15 Hz and 60 Hz with nominal load. There is a very low harmonic content and no DC level applied to motor windings.

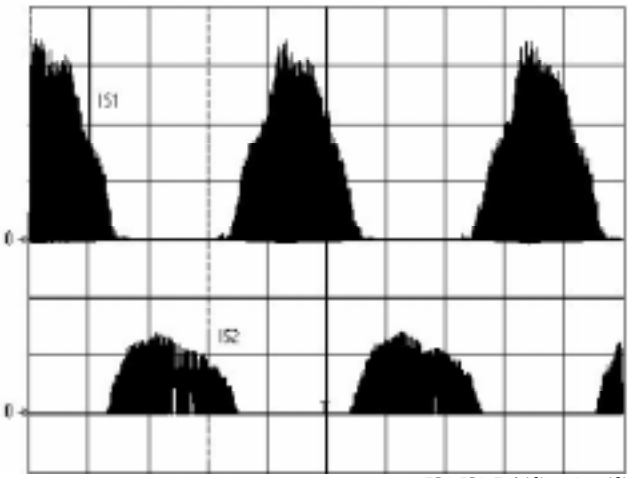


*IS1,IS2 5 A/div 4ms/div*

Fig.13 – Current through switches S1 and S2 @ 60 Hz.

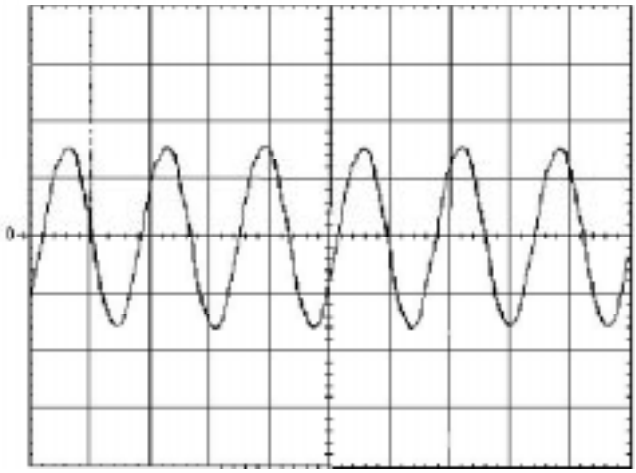


*Io – 2 A/div 10ms/div*

Fig.14 – Current on motor phase @ 60 Hz.

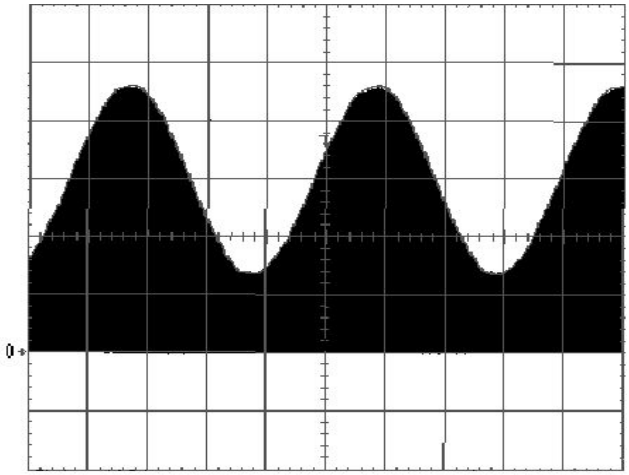


*100 V/div 4ms/div*

Fig.15 – Voltage across switch S1.

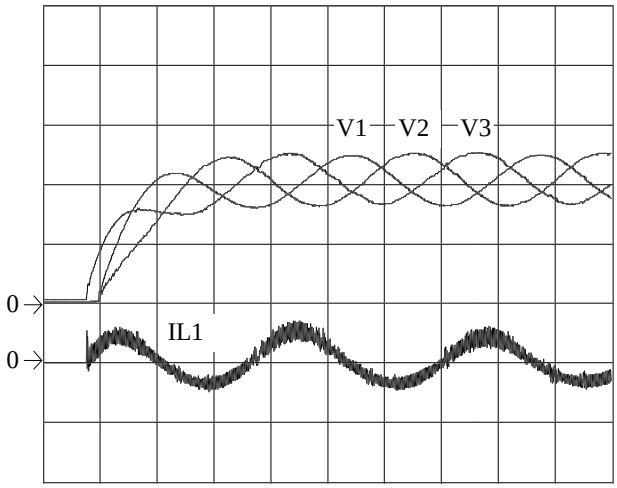


*V1,V2,V3 – 100 V/div IL1 – 10 A/div 20ms/div*

Fig.16 – Voltages V1,V2, V3 and current IL1 (start up).

Figure 13 shows currents trough switches S1 and S2 at 60 Hz and nominal load. Figure 14 shows motor winding current when operating at 60 Hz. Figure 15 shows voltage

across switch S1; this voltage level is the same to all other switches and diodes. Finally, Figure 16 shows output voltages V1, V2, V3 and current through boost inductor L1 during start up process.

## V - CONCLUSIONS

The topology presented on this paper differs from any other solution applied to motor driving. It represents a gain of efficiency, reliability, robustness and a reduction of size and weight.

Sliding mode controller had an excellent performance providing an effective way to obtain high quality sinusoidal output with high immunity to load variations. It has as disadvantage a variable switching frequency.

Proper operation was verified by 1 kVA operational prototype and it was successfully tested in the laboratory.

Finally, further works should study motor behaviour under complex control techniques and compare it with commercial products.

## VI -REFERENCES


[1] F. Barzegan and S. Cuk, "Solid-State Drives for Induction Motors: Early Technology to Current Research", Proceedings of the IEEE Region 6 Conference, Anaheim, California., February 15-18, 1982

[2] F. Barzegan and S. Cuk, "A New Switched–Mode Amplifier Produces Clean Three-Phase Power", Proceedings of Powercon 9, the Ninth International Solid-State Power Electronics Conference, Washington, D.C., July 13-15, 1982

[3] R. Cáceres, I. Barbi. "A Boost DC - AC Converter: Operation, Analysis, Control and Experimentation". IECON'95 Proceedings, pp. 94-99, 1995.