Single and Three-Phase PLL Structures for Utility Connected Systems

Lícia N. Arruda Sidelmo Magalhães S. Braz J. Cardoso Filho Selênio R. Silva
Universidade Federal de Minas Gerais
Depto. de Engenharia Elétrica
AV. Antônio Carlos, 6627
Belo Horizonte, MG. CEP: 31270-010

Abstract— **This paper presents a detailed description of a three-phase PLL (phase-locked loop) structure to meet the requirements of utility connected systems. The tuning of the PLL and the analysis of the proposed structure under distorted utility are discussed in detail. In addition, a new single-phase topology is proposed. Application of the presented topologies in dynamic voltage restorer and grid-tied photovoltaic systems are considered. Simulated and experimental results are presented.**

I. Introduction

The growth of grid-connected systems requiring synchronous operation with the utility is demanding the performance evaluation of the available PLL structures. The analysis of some of the most common topologies have demonstrated deviation from their expected behavior under utility distorted conditions. The resulting frequency and angle detection errors make them unsuitable for these applications.

The three-phase PLL topology presented in [2], despite the lack of proper analysis of the structure, has been demonstrated to be suitable for operation in grid-connected systems. Amplitude, frequency and angle information are little affected by distortions in utility.

Besides the development of an appropriated analysis (including the tuning of PLL controllers and determination of the influence of each disturbance source over the output variables) of the three-phase PLL structure proposed in [2], a new single-phase PLL topology is presented, based on the same structure used in the three-phase case. Through performance analysis of the proposed topologies in dynamic voltage restorer systems and grid-tied photovoltaic systems, distinct characteristics of the PLL topologies are investigated. Simulated and experimental results demonstrate the effectiveness of the proposed design methodology and single-phase structure.

II. Three-Phase PLL Structure

The three-phase PLL, proposed in [2], is one of the most versatile approaches for use in grid connected systems. Its basic operation is similar to that of a field-oriented controller, commonly used in AC drives. Fig. 1 shows the control diagram of such a system.

The operation principle of the three-phase PLL is based on a reference frame transformation of the three-phase quantities. Initially, the sampled voltages V_a, V_b and V_c

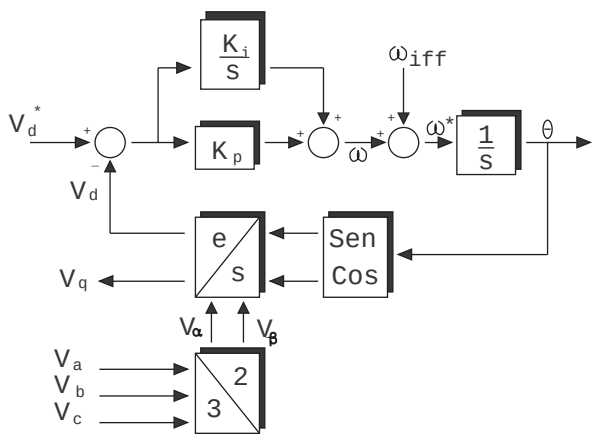

Fig. 1. Three-phase PLL simplified structure

are transformed to voltages V_α and V_β using a stationary reference frame (Clark transformation) defined by:

$$\begin{bmatrix} V_\alpha \\ V_\beta \end{bmatrix} = \frac{2}{3} \begin{bmatrix} 1 & -\frac{1}{2} & -\frac{1}{2} \\ 0 & -\frac{\sqrt{3}}{2} & \frac{\sqrt{3}}{2} \end{bmatrix} \begin{bmatrix} V_a \\ V_b \\ V_c \end{bmatrix} \quad (1)$$

These $\alpha\beta$ quantities are then transformed to V_q and V_d using a synchronous reference frame (Park transformation), according to:

$$\begin{bmatrix} V_q \\ V_d \end{bmatrix} = \begin{bmatrix} \cos\theta & -\sin\theta \\ \sin\theta & \cos\theta \end{bmatrix} \begin{bmatrix} V_\alpha \\ V_\beta \end{bmatrix} \quad (2)$$

If the angle θ varies at the same ratio as the instantaneous voltage vector angle, then V_d and V_q, in (2), are dc quantities. This angle can be obtained through a feedback loop as indicated in fig. 1. The PI regulator aims to extinguish the error between the reference value V_d^* and V_d. Setting $V_d^* \equiv 0$ forces the q axis of the synchronous frame to be locked onto the utility voltage vector.

In the control diagram of fig. 1, it is important to note that the PI output is a frequency quantity, which has to be integrated to yield the angle θ. The explanation for this is the absence of an inherent energy storage element in the feedback path, which disables positioning only the PI regulator in the direct path. Another important observation is

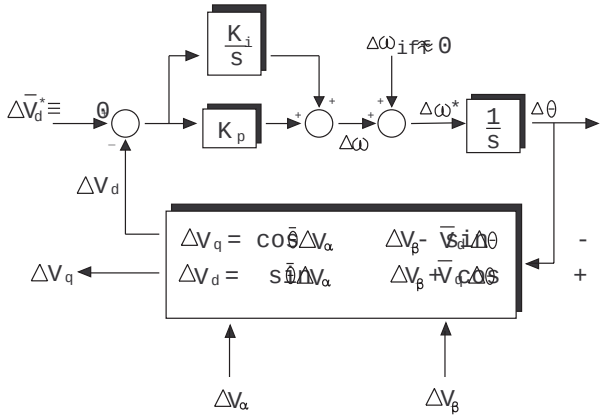
Ki
s
Kp
1
s
ΔVd
ΔVq
Δθ
Δω
Δω*
Δωiff
Δθ
Δθ
Δθ

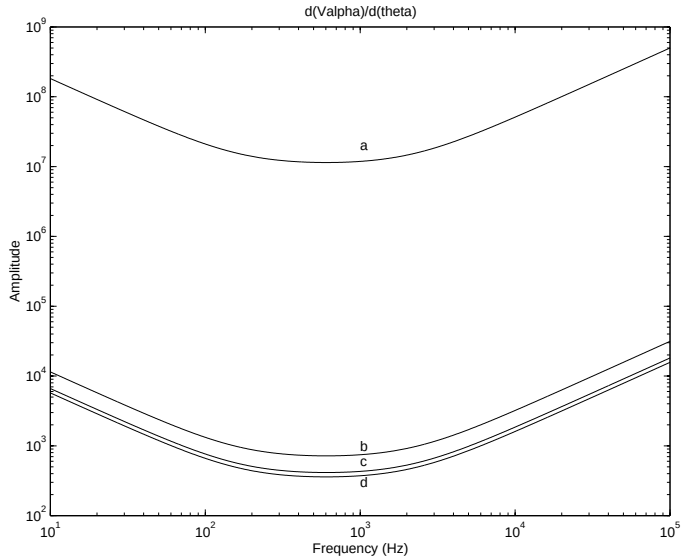

Fig. 3. ΔV_α influence over $\Delta\theta$: a) $\bar{\theta} = 0$, b) $\bar{\theta} = \frac{\pi}{6}$, c) $\bar{\theta} = \frac{\pi}{3}$, d) $\bar{\theta} = \frac{\pi}{2}$

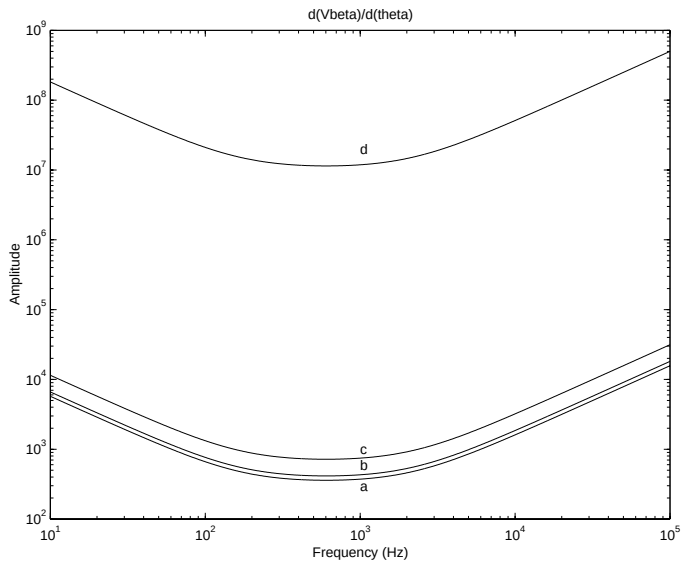

Fig. 4. ΔV_β influence over $\Delta\theta$: a) $\bar{\theta} = 0$, b) $\bar{\theta} = \frac{\pi}{6}$, c) $\bar{\theta} = \frac{\pi}{3}$, d) $\bar{\theta} = \frac{\pi}{2}$

- stiff behavior under grid distorted operating conditions, leading to reasonable results;
- suitable time response characteristic.

Fig. 7 presents the block diagram of the proposed topology. The lack of three-phase voltages is overcome by making the α-axis voltage in the stationary frame (V_α) equal to the single-phase utility voltage. This approach emulates a balanced three-phase voltage system in which the equality expressed through (9) is true.

$$V_\alpha = \frac{2}{3}\left(V_a - \frac{1}{2}V_b - \frac{1}{2}V_c\right) = V_a \tag{9}$$

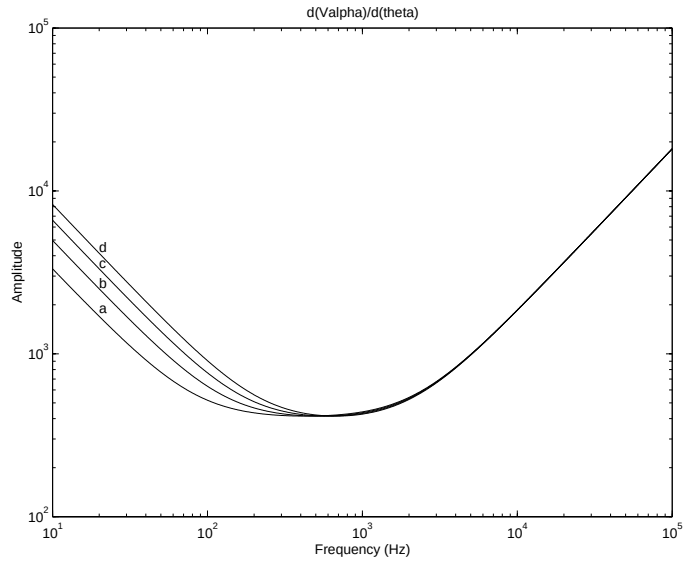

Fig. 5. K_i influence over $\Delta\theta$: a) $K_i = 20000$, b) $K_i = 30000$, c) $K_i = 40000$, d) $K_i = 50000$

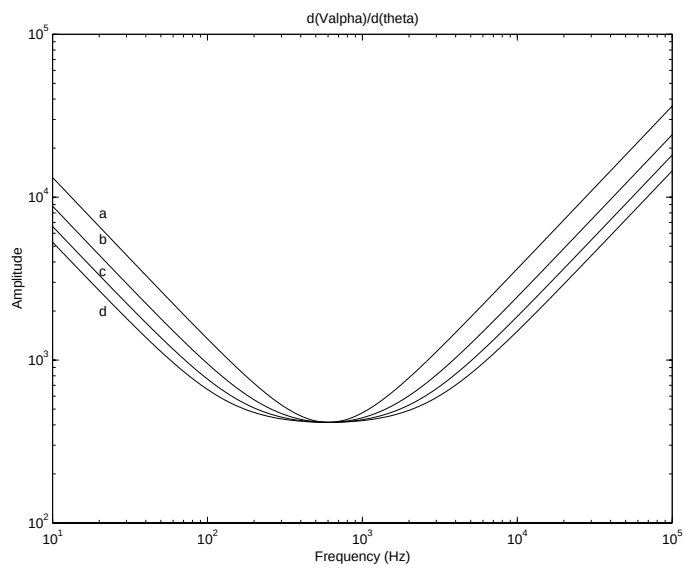

Fig. 6. K_p influence over $\Delta\theta$: a) $K_p = 20$, b) $K_p = 30$, c) $K_p = 40$, d) $K_p = 50$

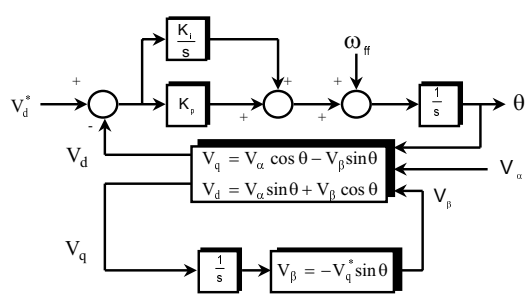

Fig. 7. Single-Phase PLL block diagram

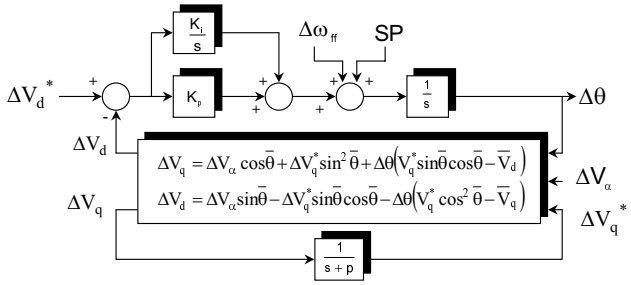

Fig. 8. Small perturbation block diagram

The quadrature voltage is provided by the inverse transformation block using the stationary frame voltages (V_d^*, V_q). The introduction of the energy storage block ($\frac{1}{s+p}$) is imposed by the feedback structure.

The small signals model block diagram of the single-phase PLL is shown in fig. 8. The corresponding state-space equation is presented in (10).

$$\frac{d}{dt}\begin{bmatrix} \int \Delta\theta dt \\ \Delta\theta \end{bmatrix} = \begin{bmatrix} 0 & 1 \\ -K_i A & -K_p A \end{bmatrix} \begin{bmatrix} \int \Delta\theta dt \\ \Delta\theta \end{bmatrix} +$$

$$+ \begin{bmatrix} 0 & 0 & 0 & 0 \\ -k_i \sin\theta & k_i \cos\theta \sin\theta & -k_p \sin\theta & k_p \cos\theta \sin\theta \end{bmatrix} \times$$

$$\times \begin{bmatrix} \int \Delta V_\alpha dt \\ \int \Delta V_q^* dt \\ \Delta V_\alpha \\ \Delta V_q^* \end{bmatrix} \tag{10}$$

where $A = V_q^* cos^2\theta - V_q$

In order to evaluate the performance of the proposed single-phase PLL, the strategy was applied to a voltage sag detection system [5]. The controller tuning methodology described earlier was employed for assessing its applicability. Fig. 9 shows the PLL input and output under a voltage sag in the input signal. As demonstrated in this figure, the single-phase PLL can give correct phase information even under stringent utility conditions, confirming its superior performance when compared to conventional PLL structures.

IV. Voltage Sag Detection and Compensation

The compensation of voltage sags presents some stringent requirement with respect to the voltage dip amplitude, fault duration and time response [1].

The main objective towards effective detection and compensation of voltage sags is to obtain a system with a minimum time delay so that it can protect the most sensitive loads, such as ASDs (Adjustable Speed Drives), computers and PLCs (Programmable Logic Controllers) [4].

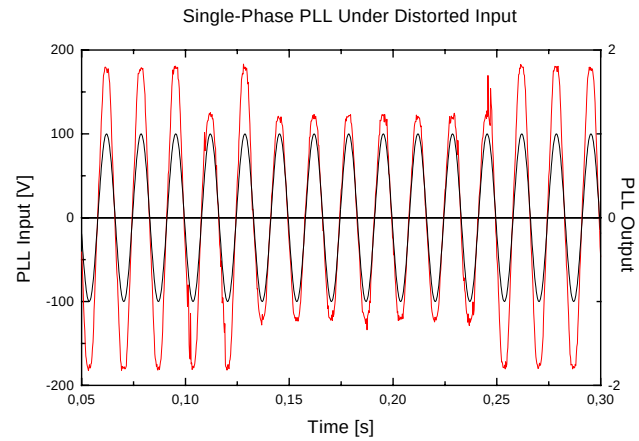

Fig. 9. Operation of the single-phase PLL under distorted utility conditions

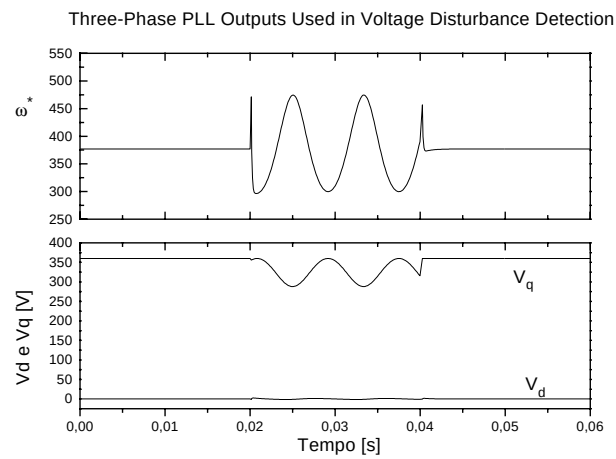

Fig. 10. Three-phase PLL in voltage sag detection

A. Voltage Sag Detection

As shown earlier, the use of a synchronous reference frame to represent the three-phase voltages makes possible to obtain phase, frequency and amplitude variations of the voltage vector so as one can have a better characterization of the disturbance occurring in the utility system. The presence of large variations in the synchronous frame quantities V_d and V_q, or even in $\omega = \frac{d\theta}{dt}$, can be used to detect the occurrence of disturbances. Fig. 10 shows this variables under a single-phase voltage sag of $0.7pu$. It is worth pointing out that the phase information given by the three-phase PLL is not strongly affected by in the utility voltages. Fig. 11 shows one of the outputs of the PLL for the same single-phase voltage sag of $0.7pu$.

B. Voltage Sag Compensation

The Dynamic Voltage Restorer (DVR) figures as one of the most attractive solutions to protect sensitive loads from voltage sags. The principle of operation of this system is illustrated in fig. 12.

The use of the three-phase PLL arises naturally from

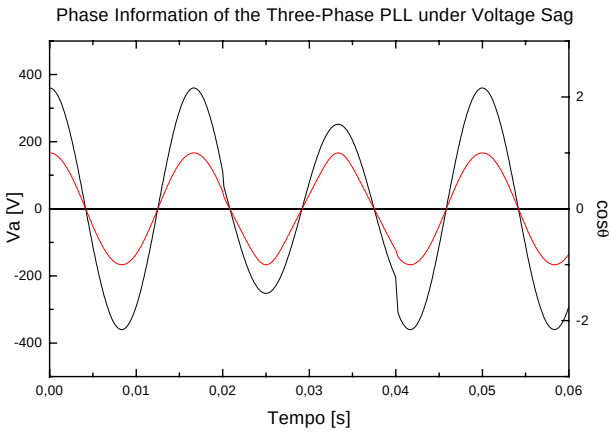

Fig. 11. Three-phase PLL under unbalanced inputs

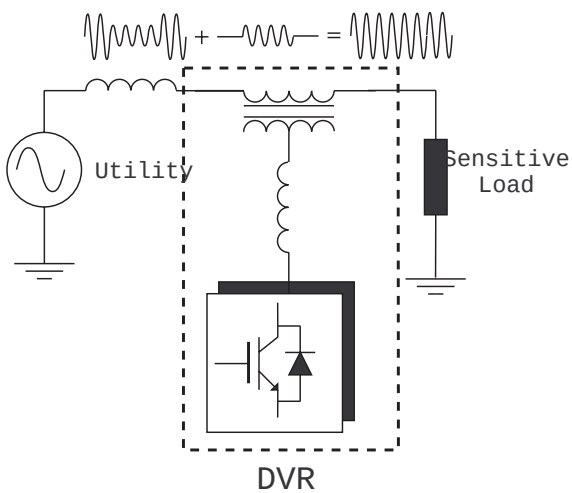

Fig. 12. Principle of operation of a dynamic voltage restorer

the necessity of a fast detection and a voltage reference generation to the disturbance compensation promoted by the DVR. Fig.13 is a block diagram of a detection and reference generation for voltage sags compensation [1].

In this system, the PLL output is passed through a low-pass filter with a large time response, yielding load reference voltages. The presence of this low-pass filter is justified by the fact that its outputs (V_q^* and V_d^*) have to follow slow variations in the utility voltages and can not perceive fast changes produced by the three-phase PLL in the presence of disturbances. In this way, the errors ($\Delta V_q = V_q^* - V_q$ and $\Delta V_d = V_d^* - V_d$) represent the compensation voltages to be injected by the DVR.

V. Grid-Tied Photovoltaic Systems

There is a consensual that sustainable photovoltaic industry growth is highly dependent on the development of the grid-tied photovoltaic market. In this way, many countries have been involved in governmental programs that aim the spread of this technology.

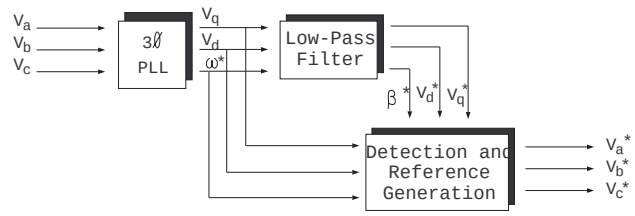

Fig. 13. Detection and reference generation of a DVR

Since this systems became more common, many problems concerning either the connection to the utility (e.g. conducted EMI and islanding) or the interaction with the ambient (radiated EMI and audible noise) have been raised. Particularly, islanding problems resulted in an international agreement between the most important research centers and the major inverter manufactures in order to establish a unique approach to deal with this issue.

Islanding is defined as the continued operation of a portion of an electric system in the absence of the main electric power source. Since the local utility administrator loses the control over the island, this situation is undesirable from the potential risk of workers dealing with an unexpectedly energized line.

Besides the obvious need of a local power source sustaining the island, there are some other requirements necessary to develop an islanding situation which are listed below:

- the generated power must match the load requirements;
- the resonance system frequency is $60Hz$.

Despite the quite limited conditions above, the assessment of today installed photovoltaic systems has justified the international effort towards the solution of this problem.

As the most common grid-tied photovoltaic systems are connected to the utility through single-phase, it is important to evaluate the behavior of the proposed single-phase PLL structure under an islanding condition. As proposed by Kern and its collaborators in [3], a positive feedback in the frequency control of an ordinary PLL structure can lead to a frequency or voltage shift out of the trip set points. When these trip set points are violated, the protection disconnects the photovoltaic system and the islanding situation is no more sustainable.

The concept of instability under islanding situation can be readily applied to the proposed single-phase PLL structure. In order to cause the necessary instability, a small high frequency sinusoidal perturbation (SP) (fig. 8) is added to the frequency signal in the block diagram of the PLL structure. As shown in fig. 14, the effect of this perturbation is negligible due to the compensation loop and, more strongly, due to the stiffness of the utility. In the ab-

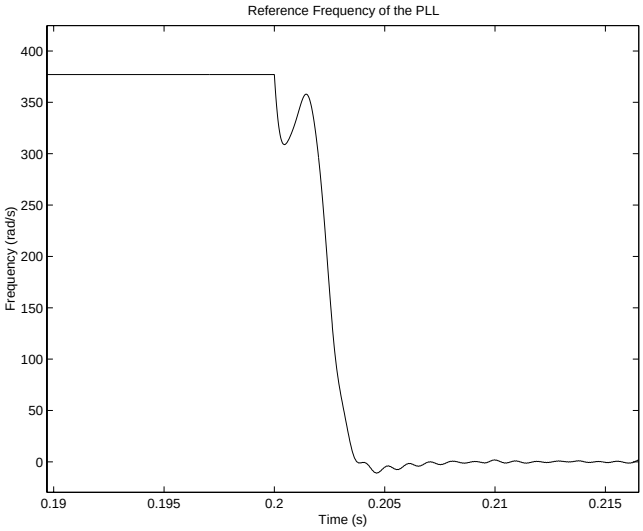

Fig. 14. Frequency signal of the single-phase PLL

sence of the utility, the introduced perturbation causes an increasing deviation of the PLL reference since the error is no more compensated by a steady reference frame. As a consequence, the frequency trip set point is readily violated and the photovoltaic system is disconnected vanishing the islanding situation.

Fig. 14 illustrates the frequency behavior of the proposed single-phase PLL structure when the utility is interrupted at $200ms$. The grid-tied photovoltaic system is promptly disconnected due to the deviation of the frequency, showing the adequate performance of the PLL topology.

VI. Conclusion

The paper presents an analysis of the three-phase PLL structure, including essential considerations about the tuning of the controller. In addition to the operating point analysis, the behavior of the topology in the presence of disturbances was pointed out, stressing the importance of the proposed methodology.

A new single-phase PLL system, based on the three-phase approach, was introduced. Its superior performance under distorted input conditions was demonstrated, by simulation and experimental results, proving its adequacy to operate in utility connected systems.

The use of the PLL structures in grid-tied photovoltaic systems and voltage sag detection and compensation demonstrated practical situations that can benefit from the usage of the PLL structures discussed in this paper to track down the instantaneous position of the utility voltage vector.

References

[1] Alexander Kara, Peter Dhler, David Amhof, and Horst Grning. Power supply quality improvement with a dynamic voltage restorer (dvr). In *XIII Applied Power Electronics Conference and Exposition*, pages 986–993, Aneheim, California, February 1998.

[2] Vikram Kaura and Vladimir Blasko. Operation of a phase locked loop system under distorted utility condidions. *IEEE Transactions on Industry Applications*, 33(1):58–63, January/February 1997.

[3] G. A. Kern, R. H. Bonn, J. Ginn, and S. Gonzalez. Results of sandia national laboratories grid-tied inverter testing. In *2nd World Conference and Exhibition on Photovoltaic Solar Energy Conversion*, Vienna, Austria, July 1998.

[4] Robert H. Lasseter. Utility application of power electronics. Class notes, Wisconsin University, 1995.

[5] Sidelmo M. Silva, Braz J. Cardoso Filho, Lícia Neto Arruda, and Selênio Rocha Silva. Estratégia de detecção de mergulho de tensão e sua aplicação em um sistema de captura e registro. *Seminário Brasileiro da Qualidade da Energia*, Agosto 1999. a ser publicado.