A Simple Regulators Optimization Method For A Thyristorized Controlled Synchronous Motor Drive System

Karina Elias B. Quinderé; Ângelo José J. Rezek; José Policarpo G. de Abreu; Valberto F. da Silva; José A. Cortez; José Manuel E. Vicente; Antonio Tadeu L. de Almeida
EFEI
CEP: 37500-000 - Itajubá, MG - Brazil
Tel.: +55-356291173 - FAX: +55-356291187
e-mail: rezek@iee.efei.br

***Abstract* - The overexcited synchronous motor is fed by a natural commutated inverter. The control system has been implemented to modify the rectifier voltage. The inverter firing technique used has been the machine terminal voltage sensor, employing the dedicated integrated circuit TCA 780 (Icotron-Siemens). The reference pins (5) of the TCA's 780 are supplied by the secondary voltages of two synchronizing transformers, connected to the electrical system and the machine terminals for the rectifier and inverter firing units, respectively. The pulses are generated by TCA's 780 using the ramp method.**

The control system has been implemented to modify the rectifier voltage. For this purpose there are the speed and current regulators designed according to the symmetric optimization criterion [2]. These regulators have been determined using a simple design procedure that will be presented in this paper.

A DC control level voltage V_{CC} (0→10[V]) connected to the pins 11 of the TCA's 780 makes possible the modification of the firing angle (α), in a way that for a V_{CC} of 10[V] there is an α of 180°, and for a V_{CC} of 0[V], α equals 0°. An intermediary value of α can be obtained by modifying V_{CC}, so that the relationship between α and V_{CC} remains linear.

The DC control voltage of the rectifier (V_{CCR}) is varying, but the control voltage of the inverter (V_{CCI}) remains always 0[V]. In this case a zero crossing machine terminal voltage has been used to fire the inverter. The synchronizing transformer used in this case has been a special transformer delta/zig-zag Δ/z-195° [1], so the inverter firing angle is constant and equals 165°. The rectifier synchronizing transformer is delta zig-zag Δ/z-30° and the firing angle of this unit is varying.

The inner proportional integral (PI) regulator makes possible the limitation of the motor current and both PI speed and current regulators act when a load disturbance torque occurs or in a drop in the rectifier voltage.

The motor current and speed signals, as well as of the input and output signals of the regulators, have been registered in these cases, by using a storage oscilloscope, and the experimental results discussed. Presently digital PI and fuzzy regulators are being implemented to compare the results of the dynamic behavior of the controlled system.

I . INTRODUCTION

A simple regulator design procedure for a commutatorless DC motor will be presented in this paper. The method is based upon the symmetric optimization criterion[2]. Experimental results using PI regulators designed according to this proposed method will be presented.

The main advantage of the regulators used for implementation is that we can adjust separately the gain (P) and the time constant (I) of the proposed regulator[2].

II. REGULATOR DESIGN PROCEDURE

A. Electrical Machine Armature Equation

$$V_{dR} = R_a I_a + L_a \frac{dI_a}{dt} + V_{dI}$$

By using Laplace transform, yields:

$$V_{dR}(s) = R_a I_a(s) + SL_a I_a(s) + V_{dI}(s)$$

$$V_{dR}(s) - V_{dI}(s) = I_a(s) \cdot [R_a + SL_a]$$

$$I_a(s) = \frac{V_{dR}(s) - V_{dI}(s)}{R_a + SL_a} \qquad (1)$$

where:

$V_{dR} \rightarrow$ Rectifier DC output voltage

$V_{dI} \rightarrow$ Inverter DC output voltage

$L_a \rightarrow$ Total inductance (including machine and DC link inductor)

$R_a \rightarrow$ Total resistance (including machine and DC link inductor)

Defining,

$$T_a = \frac{L_a}{R_a} \qquad (2)$$

where:

$T_a \rightarrow$ Armature time constant

$$I_a(s) = \frac{V_{dR}(s) - V_{dI}(s)}{1 + ST_a} \cdot \frac{1}{R_a}$$

$$\frac{I_a}{I_N} \times I_N = \frac{V_{dR}(s) - V_{dI}(s)}{R_a} \times \frac{V_N}{V_N} \times \frac{1}{1 + ST_a}$$

$$\frac{I_a}{I_N} = \frac{V_{dR}(s) - V_{dI}(s)}{V_N \cdot R_a} \times \frac{V_N}{I_N} \times \frac{1}{1 + ST_a}$$

$$\frac{I_a}{I_N} = \frac{V_{dR} - V_{dI}}{V_N} \times \frac{V_N}{R_a \cdot I_N} \times \frac{1}{1 + ST_a} \qquad (3)$$

In "pu" values, we have:

$$i_a = \frac{I_a}{I_N} \tag{4}$$

$$v_{dR} = \frac{V_{dR}}{V_N} = e \tag{5}$$

$$v_{dI} = \frac{V_{dI}}{V_N} = u \tag{6}$$

$$v_i = \frac{V_N}{R_a I_N} \tag{7}$$

$$i_a = (v_{dR} - v_{dI}) \cdot \frac{v_i}{1 + ST_a} \tag{8}$$

where:

$V_N \rightarrow$ Rated V_{dR}

$I_N \rightarrow$ Rated I_a

$I_a \rightarrow$ DC link current

By replacing,

$$V_{dR} = E \tag{9}$$

$$V_N = E_N \tag{10}$$

$$E = 1{,}35 \cdot U_2 \cdot \cos\alpha \tag{11}$$

$$\frac{d_E}{d\alpha} = -1{,}35 \cdot U_2 \cdot \operatorname{sen}\alpha \tag{12}$$

where :

$U_2 \rightarrow$ Rectifier AC supply voltage (phase-phase) (V)

$\alpha \rightarrow$ Rectifier firing angle

$$\frac{d\left(E/E_N\right)}{d\left(\alpha/\Pi\right)} = -1{,}35 \times \frac{U_2}{E_N} \times \Pi \times \operatorname{sen}\alpha \tag{13}$$

In "pu"values, yields:

$$\frac{d(e)}{d(\alpha_u)} = -1{,}35 \times \frac{200}{187} \times \Pi \times \operatorname{sen}\alpha \tag{14}$$

where:

$\alpha_u \rightarrow$ "pu" firing angle

Defining $V_S \rightarrow$ Static converter gain, we have:

$$V_{S1} = \left|\frac{de}{d\alpha_u}\right|_{\alpha=90^o} = 4{,}53 \tag{15}$$

(maximum gain)

$$V_{S2} = \left|\frac{de}{d\alpha_u}\right|_{\alpha=46^o} = 3{,}26 \text{ (rated)} \tag{16}$$

(minimum gain)

Medium static converter gain:

$$V_S = 3{,}90 \tag{17}$$

Also: $$v_i = \frac{E_N}{R_a I_N} = \frac{187}{3{,}72 \cdot 4} = 12{,}57 \tag{18}$$

The total gain,

$$V_{Sia} = v_s \cdot v_i \tag{19}$$

$$V_{Sia} = 3{,}90 \cdot 12{,}57 = 49{,}02$$

$$V_{Sia} = 49{,}02 \tag{20}$$

Small time constants:

$T_{SS} \rightarrow$ Firing circuit time constant $(2{,}5[ms])$

$T_{gi} \rightarrow$ Current transducer filter time constant $(1{,}5[ms])$

$$\sigma = T_{SS} + T_{gi}$$

$$\sigma = 4[ms] \tag{21}$$

B. Current Regulator Design

The relationship $\frac{T_a}{4\sigma} = \frac{54{,}5}{4 \cdot 4} = 3{,}41 > 1$

According to the table 6.4 of [2].

The current regulator gain is :

$$V_{Ri} = \frac{T_a}{2V_{Sia}\sigma} = \frac{54{,}50}{2 \cdot 49{,}02 \cdot 4} = 0{,}14 \tag{22}$$

The current regulator time constant:

$$T_i = 4\sigma \cdot \frac{T_a}{T_a + 3\sigma} = 4 \cdot 4 \cdot \frac{54{,}50}{54{,}50 + 3 \cdot 4}$$

$$T_i = 13{,}11[ms] \tag{23}$$

The reference value filter is given by:

$$T_{gS2} = 4\alpha\left(1 - e^{-\left(\frac{T_a}{4\alpha} - 1\right)}\right)$$

$$T_{gS2} = 4 \times 4\left(1 - e^{-\left(\frac{54{,}50}{16} - 1\right)}\right)$$

$$T_{gS2} = 14{,}55[ms] \tag{24}$$

<u>PI Current Regulator</u>

Gain: $V_{Ri} = 0{,}14$

Time constant: $T_i = 13{,}11[ms]$

Reference value filter: $T_{gS2} = 14{,}55[ms]$

Transducer filter $T_{gi} = 1{,}5[ms]$

C. Speed Regulator Design

According to [2], the equivalent time constant of the current closed loop is given by:

$$T_e = 2\sigma + \frac{1}{2} \times T_{gS2} = 15[ms] \tag{25}$$

Also the speed transducer filter (T_{gN}) is equal

$$T_{gn} = 100[ms] \text{ (adopted)} \tag{26}$$

The small time constants of the speed regulator loop

$$\sigma' = T_e + T_{gn} = 115[ms] \quad (27)$$

The acceleration machine time constant [2]

$$T_H = \frac{2\Pi}{60}\frac{JN_0}{M_N} \quad (28)$$

where:

$J \rightarrow$ machine inertial moment $[Kg.m^2]$

$M_N \rightarrow$ rated torque $[N.m]$

$N_0 \rightarrow$ no load speed $[rpm]$

we obtain $T_H = 1{,}2[s]$ (29)

The relationship,

$$\frac{T_H}{4\sigma'} = 2{,}61 > 1$$

According to table 6.3 [2].

Speed regulator gain:

$$V_{RN} = \frac{T_H}{2\sigma'} = 5{,}22 \cong 5 \quad (30)$$

Speed regulator time constant :

$$T_n = 4\sigma' = 460[ms] \quad (31)$$

Reference value filter:

$$T_{gS1} = T_n = 460[ms] \quad (32)$$

<u>PI Speed regulator</u>

Gain: $V_{RN} = 5$

Time constant: $T_N = 460[ms]$

Reference value filter: $T_{gS1} = 460[ms]$

Transducer filter $T_{gn} = 100[ms]$

III. EXPERIMENTAL RESULTS

Fig. 1 shows the implemented system. Fig. 2 shows the regulators and filters used.

Fig. 3 shows the speed and current when a load disturbance torque occurs, showing the speed regulation.

Fig. 4 shows the machine speed and Dc link current when positive disturbance occurs in the speed reference.

Fig. 5 shows the machine speed and current during the starting process.

The synchronous machine starting process used has been the start-up with auxiliary machine. The current limiting has been used during the machine starting process (see fig. 5).

Fig. 6 shows the complete block diagram of the drive. Fig. 7 shows the drive current regulation loop and Fig. 8 shows the drive speed regulation loop.

Motor ratings:

- **Voltage: 230[V]**
- **Current: 5[A]**
- **Poles: 4**
- **Power: 2[KVA]**

IV. CONCLUSION

A simple control circuit has been implemented in laboratory. The adjust of the regulators has been made according to the symmetric optimization criterion [2]. The regulators design procedure for a controlled commutatorless DC motor is very simple and efficient and some obtained experimental results have been presented.

The closed loop control system tested has presented good accuracy and dynamics.

V. AKNOWLEDGMENT

The authors would like to thank FAPEMIG Proc. TEC 657/92 for the economical support to the development of this research work.

VI. REFERENCES

[1] Abreu, J.P.G.; Rezek, A.J.J.; Coan, R.J.P. “Phase Shift Transformer $0 \rightarrow 360^0$ by Using Tap’s with Constant Voltage (in Portuguese), *Proceedings VI CBA*, Vol.II, pg. 670-674, Belo Horizonte(MG), 1986.

[2] F. Fröhr & F. Orttenburger “Introduccion al Control Electronico” Siemens, Marcombo S/A, Barcelona, 1986.

[3] Rezek, A. J. J.; Rodrigues, M. S.; Miranda, V. A.M.; Oliveira, V.A.; Cassula, A.M.; Costa Jr.,R.A .Torres, A. Z.. ”Design and Simulation of a Controlled DC Drive” (in portuguese), *Proceedings of 2nd International Seminar on Electrical Machines and Controlled Drives - II SIMEAR, Abinne Tec 91*, EPUSP, São Paulo, SP-Brasil, vol. 3, pp. 141-160, May.1991.

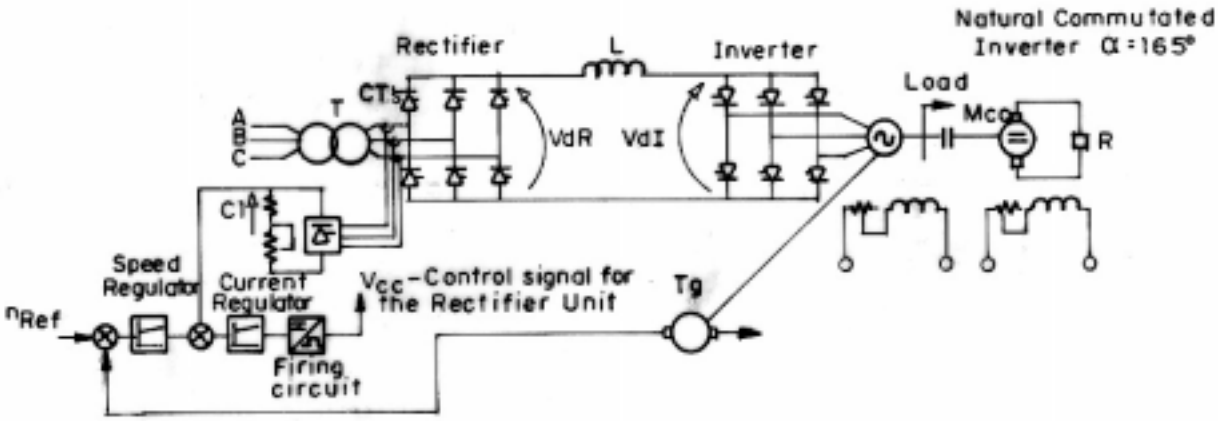

Figure 1: – Implemented system

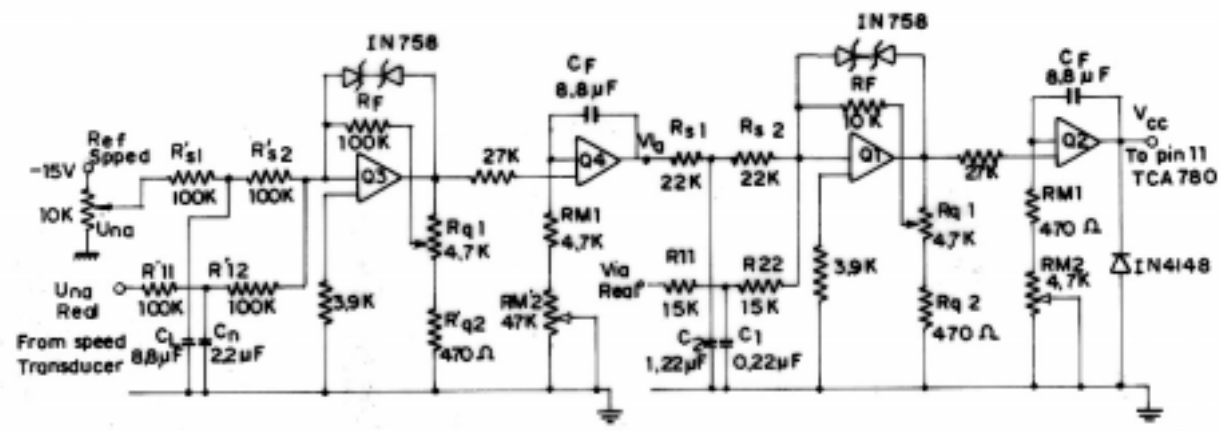

Figure 2: – Filters and regulators used

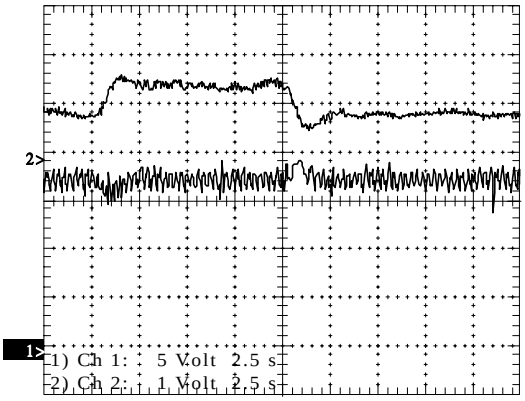

Figure 3 - Speed and current when a load disturbance torque occurs: (1)Speed, (2)Current.

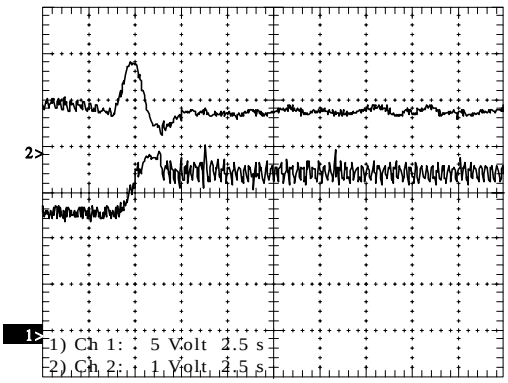

Figure 4 : Speed and current when a positive machine speed reference occurs.

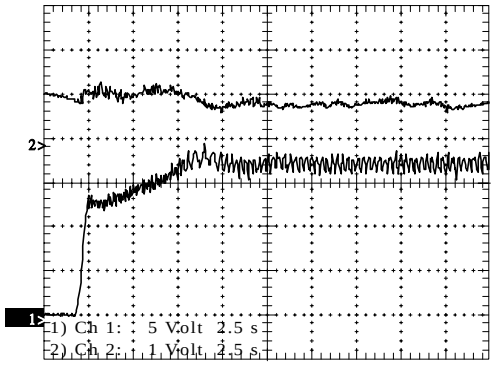

Figure 5: Speed and current during the machine start-up

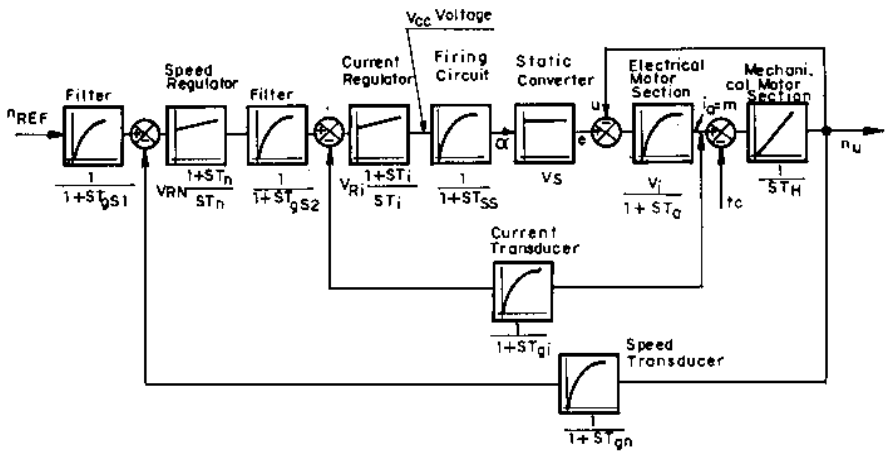

Figure 6: Complete drive block diagram

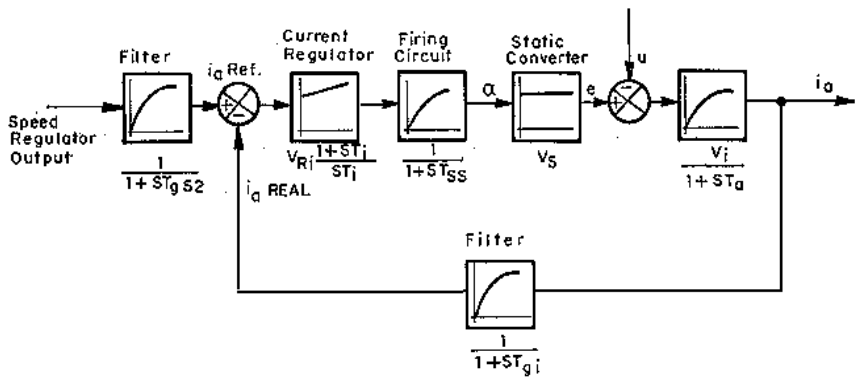

Figure 7: Current regulator loop

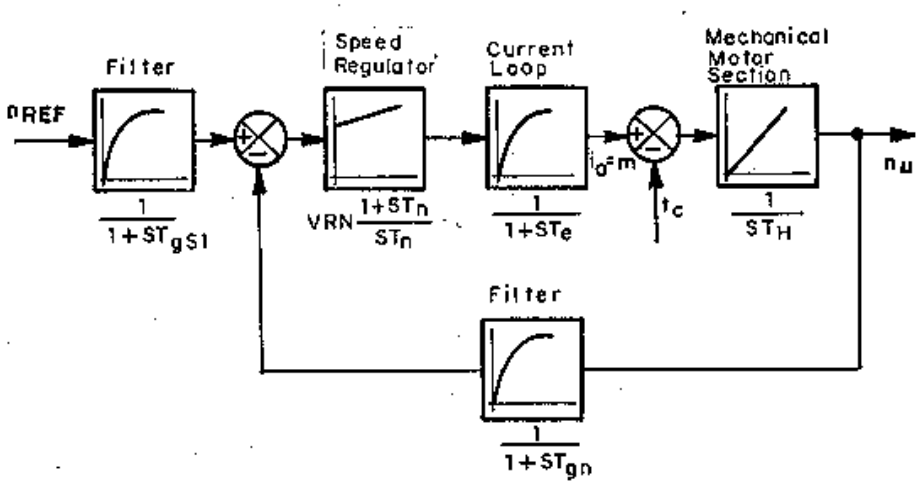

Figure 8: Speed regulation loop