COMPARISON OF TWO AC/AC REGULATORS: THE SERIAL AC LINK REGULATOR AND THE BOOST/INVERTER CONVERTER

João Carlos de Oliveira Evandro A. Soares da Silva Valdeir José Farias Luiz Carlos de Freitas
João Batista Vieira Jr.
Universidade Federal de Uberlândia
Departamento de Engenharia Elétrica
Campus Santa Mônica -Bloco E
38400-902-Uberlândia-MG-BRAZIL
e-mail : batista@ufu.br

***Abstract* - This paper presents a comparison of two AC/AC voltage regulators. The AC/AC serial regulator will be compared with the conventional AC/AC regulator that uses a rectifier, a Boost pre-regulator, to obtain unity power factor, and an Inverter circuit to obtain an AC voltage in load. Principle of the operation, theoretical analysis and experimental results are provided.**

I. INTRODUCTION

There are so many topologies of AC single-phase voltage regulators. The most of these AC/AC regulators are electromechanics, such as transformers with taps. Figs. 1a and 1b show some of these structures [1, 2].

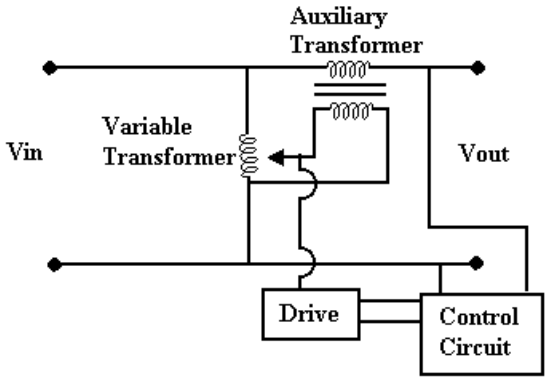

(a)

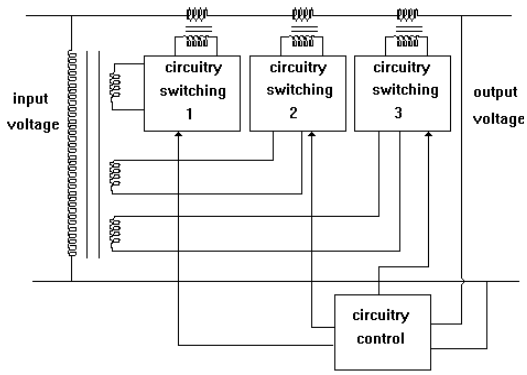

(b)

Fig. 1 - AC/AC Regulators with transformers.

Between the switched regulators, the Boost/Inverter regulator is the more commercial. This regulator uses a rectifier stage (AC/DC), a Boost pre-regulator, to provide unity power factor, and an Inverter circuit (DC/AC) to obtain an AC voltage with the value and frequency desired in the loud.

However, with the active filters evolution, the serial topology has been used to regulate the AC voltage in single phase loads [3-7]. An advantage of the serial active filter employed as voltage regulator is that this structure does not need to supply the load total power. It contributes supplying only the necessary power to regulate the output voltage.

In this work the serial regulator uses an AC/AC soft switching Full Bridge converter, that is, really, two AC/AC Buck converters operating complementarily, one with duty cycle D and the other with (1-D).

II. CIRCUIT DESCRIPTION AND OPERATION PRINCIPLE

Figs. 2*a* and 2*b* show the power diagrams to the two regulators of this comparison.

Four active bi-directional switches and a low frequency transformer represented by Ls and Lp windings compose the serial regulator. The output filter is performed by Cf. Vi(t) is the sinusoidal line voltage. The non-dissipative commutation cell is formed by two rectified AC power supplies, two resonant inductors, two diodes, two auxiliary switches and the resonant capacitor.

the auxiliary switches S_{a1} and S_{a2}, to both the converters, are turned on in a ZCT (Zero Current Transition) way due to the Lr1 and Lr2 resonant inductors respectively. The main switches S_1, S_2, S_3 and S_4 are turned on in the ZVS (Zero Voltage Switching) way. The Boost/Inverter structure was implemented using the two level PWM sinusoidal modulation and the same non dissipative commutation cell used to the AC/AC serial regulator.

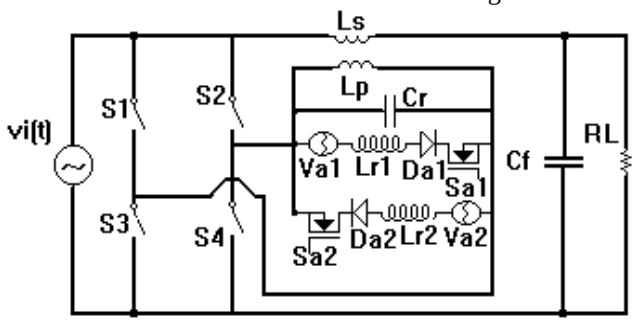

(a)

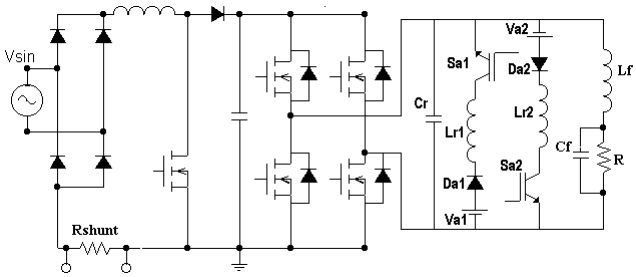

(b)

Fig. 2 - The AC/AC voltage regulators.

The Boost/Inverter circuit is shown in Fig. 2*b*. A rectifier, a Boost converter, an Inverter circuit and the non-dissipative cell compose it. The circuits operation, to both applications, is explained as follow.

A)- The Serial regulator:

1st stage (to, t1) (Fig. 3a): This stage begins when the switch S_{a1} is turned on in the ZCS form. C_r oscillates with L_{r1} until its voltage (V_{Cr}) to reach the input voltage vi(t).

2nd stage (t1, t2) (Fig. 3b): S1 and S4 are turned on in the ZVS form. The resonant inductor current decreases linearly through S_{a1}, S1 and S4, delivering its stored energy to input voltage source.

3rd stage (t2, t3) (Fig. 3c): S1 and S4 are on. In this stage the current through primary winding Lp rises linearly and the power is transferred to the load.

4th stage (t3, t4) (Fig. 3d): This stage begins when the switches S1 and S4 are turned off and S_{a2} is turned on in the ZCS form. C_r oscillates with L_{r2} its voltage (V_{Cr}) to reach the negative of the input voltage vi(t).

5th stage (t4, t5) (Fig. 3e): S2 and S3 are turned on in the ZVS form. The resonant inductor current decreases linearly through S_{a2}, S2 and S3, delivering its stored energy to input voltage source.

6th stage (t5, t6) (Fig. 3f): S2 and S3 are on. During this operation stage, it will be applied one negative voltage (-vi(t)) in the primary. The current through Lp, transformer primary winding, decreases.

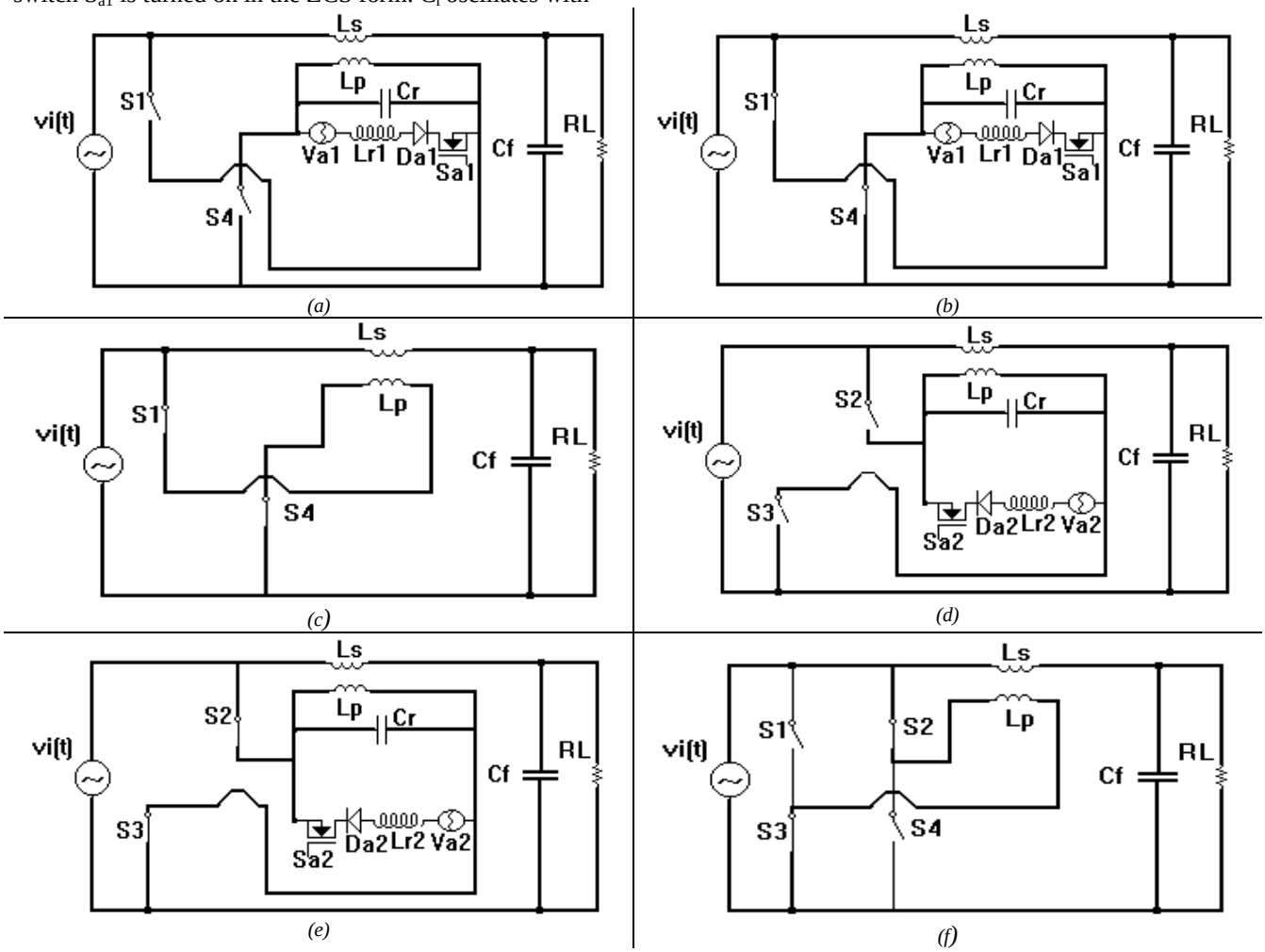

Fig. 3 - Operating stages to serial regulator.

B)- The Boost/Inverter regulator:

The pre-regulator Boost converter analyses will be disregarded due to it is a known structure. To analyze the inverter operation stages the Boost converter will be changed by a CC voltage source, as shown in Fig. 4. The two level PWM sinusoidal modulation was implemented to modulate a sinusoidal output voltage. This technique was chosen by to be the simplest in its implementation and do not to possess problems of zero passage in output current.

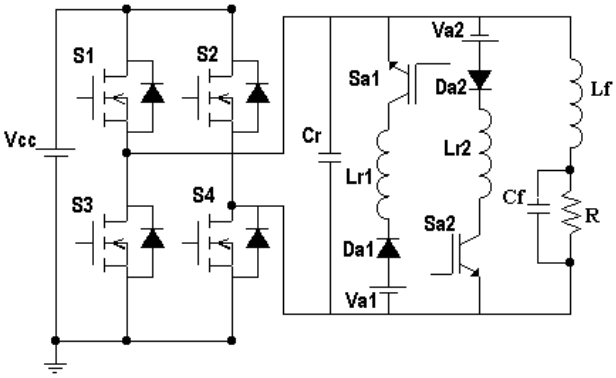

Fig. 4 - Inverter circuit.

The operation stages are as follows:

Stage 1 - (t0–t1)(Fig. 5a) - This stage begins when the switch S_{a1} is turned on in the ZCS form. C_r oscillates with L_{r1} until its voltage (V_{Cr}) to reach the input voltage Vcc.

Stage 2 - (t1–t2)(Fig. 5b) - S1 and S4 are turned on in the ZVS form. The resonant inductor current decreases linearly through S_{a1}, S1 and S4, delivering its stored energy to input voltage source.

Stage 3 - (t2–t3)(Fig. 5c) - This stage begins when switches S1 and S4 are turned on. The current in the inductor Lf increases linearly, transferring energy for the load.

Stage 4 - (t3–t4)(Fig. 5d) - The switches S1 and S4 are turned off and S_{a2} is turned on in the ZCS form. C_r oscillates with L_{r2} until its voltage (V_{Cr}) to reach the negative of the input voltage Vcc.

Stage 5 - (t4–t5)(Fig. 5e) - S2 and S3 are turned on in the ZVS form. The resonant inductor current decreases linearly through S_{a2}, S2 and S3, delivering its stored energy to input voltage source.

Stage 6 - (t5–t4)(Fig. 5f) - S2 and S3 are on. During this operation stage, it will be applied one negative voltage (-Vcc) in the filter stage. The current through Lf decreases.

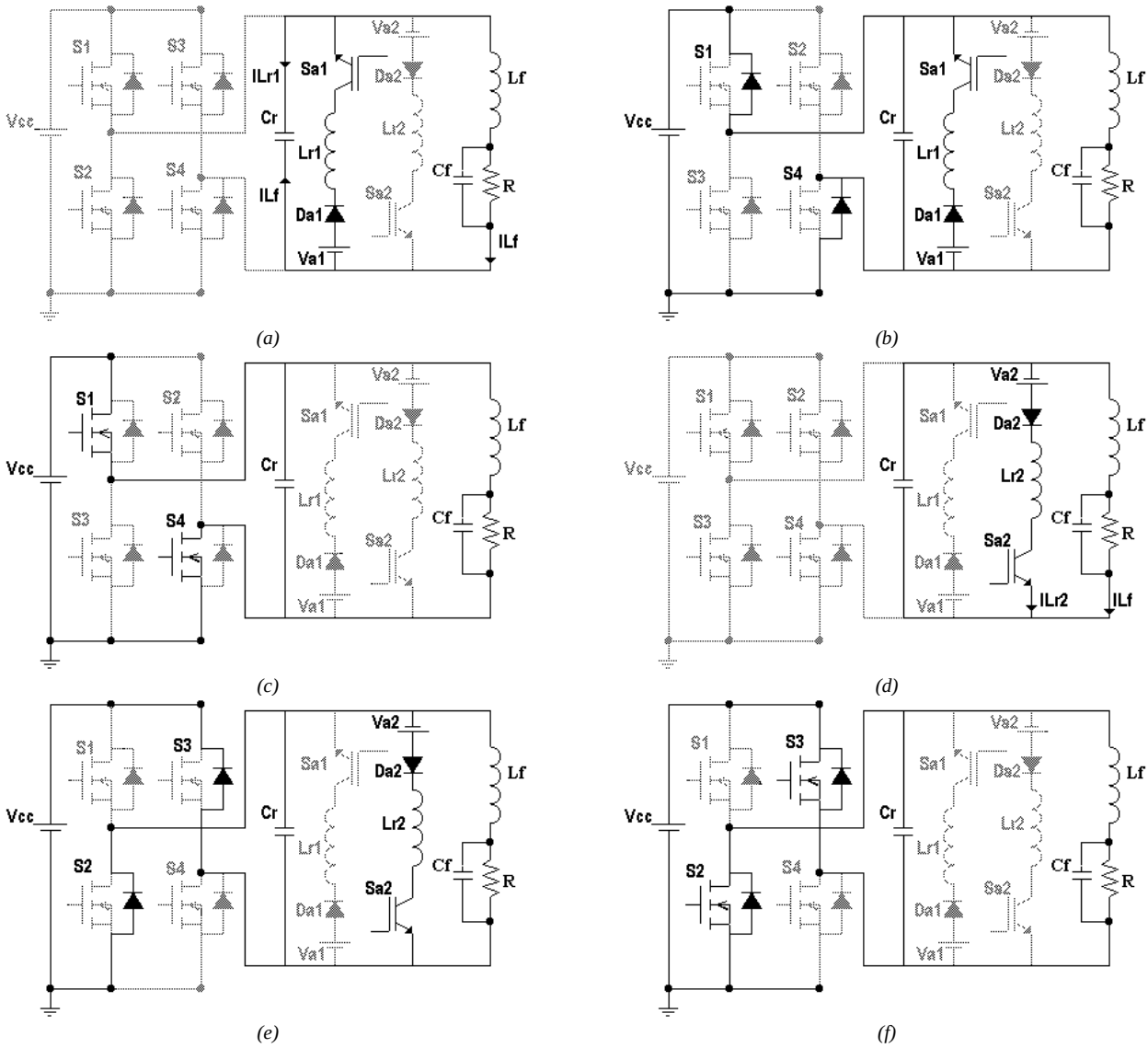

Fig. 5 - Operating stages to Boost/Inverter regulator.

Fig. 6 shows the waveforms to the voltage between inverter arms and the inductor current after successive switching cycles.

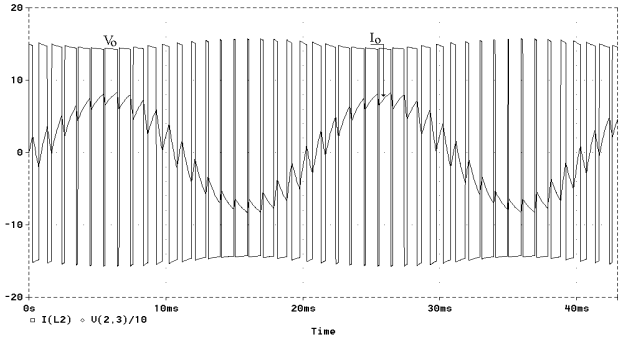

Fig. 6 - Voltage and Current in filter stage.

IV. EXPERIMENTAL RESULTS

Prototypes have been built to the circuits presented in Figs. 2*a* and 2*b* and measurements were taken in order to demonstrate the circuit operation to the regulators. The parameters are as follow:

A)- Serial regulator:

Parameters	
Da1 e Da2,= HFA15TB;	*S1,S2,S3 e S4 = IRF740;*
Sa1,Sa2=IRGPH50KD2;	C_R *= 3nF;*
Vi = 180 Vrms	L_R *= 3μH;*
fr = 1600kHz	P_0 *= 1060W;*
Pi =1085W;	*n=97.8%;*
f_S *= 50kHz;*	*RL = 45Ω.*
Vo = 220Vrms;	*Cf = 2.2 uF/250 V (PHILIPS).*

B)- Boost/Inverter

Parameters	
Da1 e Da2,= HFA15TB;	*Cboost= 1360uF;*
S1,S2,S3 and S4 = IRFP460;	*Lboost=1.3mH;*
Vi = 100 to 150 Vrms	L_f *= 3.5mH;*
Vo = 127Vrms;	*Cf = 1 uF;*
fsboost = 20kHz;	*RL = 48Ω;*
Fsinv= 50kHz;	P_0 *=600W.*

Fig. 7 shows the transformer's primary and secondary voltages. Can be noticed that the secondary voltage has a positive contribution to output voltage, increasing its RMS value.

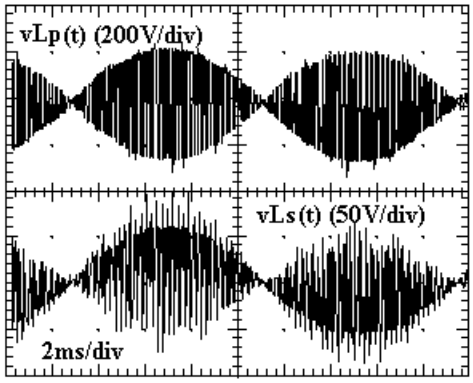

Fig. 7 - Transformer's primary and secondary voltages.

Fig. 8 shows the voltage across the resonant capacitor Cr and Lr1 and Lr2 inductor's currents. It can be noticed that an advantage of this resonant topology is that the resonant stages are smaller than the power transferring stages. This results in a better switch efficiency.

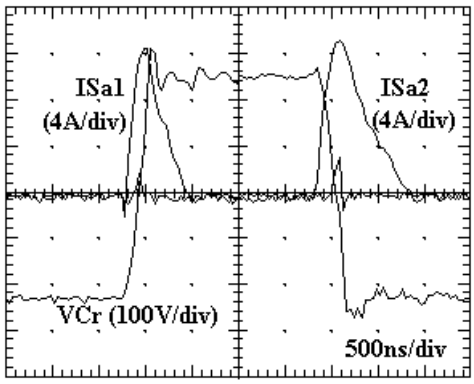

Fig. 8 - Voltage and current in resonants elements.

The main switches switching to the serial regulator and the Boost/Inverter are shown in Figs. 9*a* and 9*b*. The transition occurs in mode ZVS. The negative current peak is due to the inductor's regenerative energy to input source voltage.

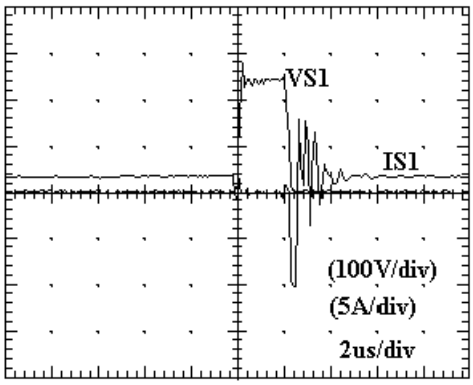

(a) - Serial regulator main switch transition

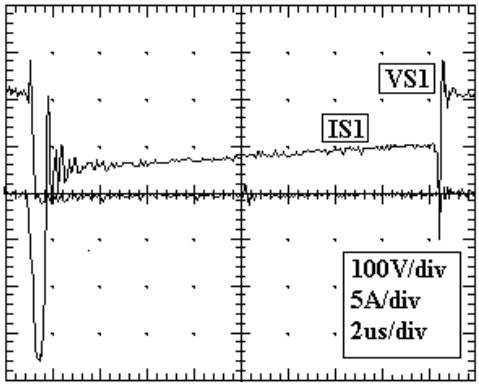

(b) - Inverter main switch transition

Fig. 9 - Voltage and current in switch S1.

The Auxiliary Sa1 switch transition to both converters is shown in Figs. 10*a* and 10*b*. The transition occurs in mode ZCT due the resonant inductor Lr1. The Isa1 current will to charge the resonant capacitor until its voltage become vi(t) and to return the resonant inductor's energy to input source voltage. The non-dissipative cell has the same behavior to both structures. The difference between the cells is that the AC/AC serial regulator uses two rectified sinusoidal voltage sources as auxiliary sources, and the Boost/Inverter uses two CC voltage sources.

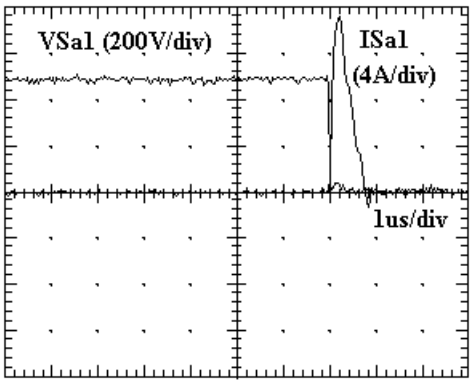

(a) - Serial regulator auxiliary switch transition

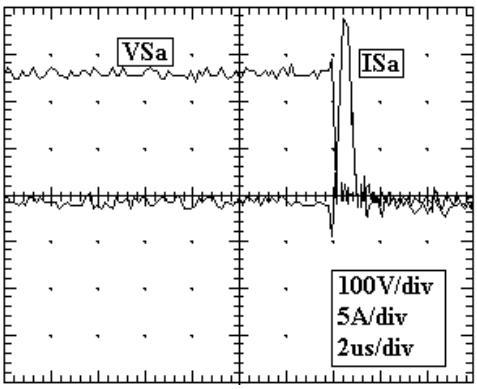

(a) - Inverter auxiliary switch transition

Fig. 10 - Sa1 transition to serial and Boost/Inverter regulators.

Fig. 11 shows, to the serial regulator, the output voltage regulated in 220 V to Vi= 180Vrms. It can be noticed the proposed circuit working. The secondary winding voltage is appropriately added or subtracted to input voltage (vi) obtaining an output voltage (vo) regulated. It was obtained an efficiency of 97,8% to Po=1060W.

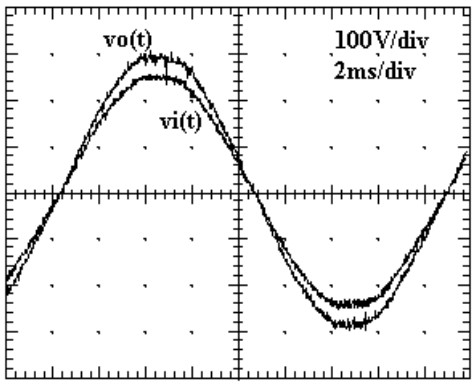

Fig. 11 - Output and input voltage to Vi= 180 Vrms.

Fig. 12 shows, to the Boost/Inverter, the output voltage regulated in 127 V to an input voltage range of 100 to 150Vrms. It was obtained an efficiency of 86% to Po=600W. It can be noticed that vo(t) is time lagged in relationship to vi(t). This is due to the vi(t) signal sample, the reference signal, which was picked in the AC system through a transformer.

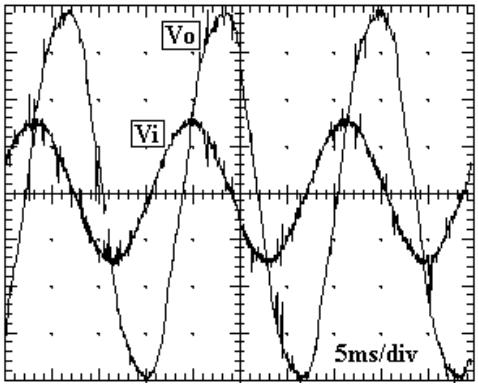

(a) - Vi= 100Vrms; Vo= 127Vrms.

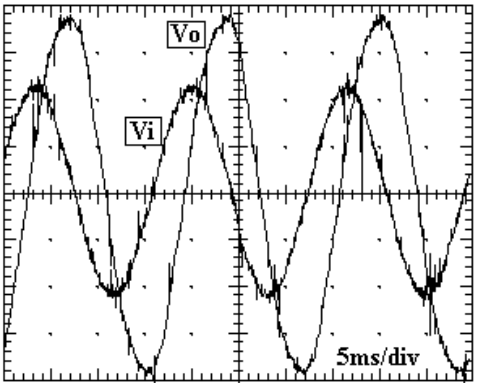

(b) - Vi= 150Vrms; Vo= 127Vrms

Fig. 12 - Boost/Inverter regulation.

An advantage of the Boost/Inverter regulator is the easily to implement power factor correction. So many techniques can be used. In this application the PFC was implemented using the "Bang-Bang" technique. It can be noticed, in Fig. 13, that the input waveforms are approximately sinusoidal with some harmonic content.

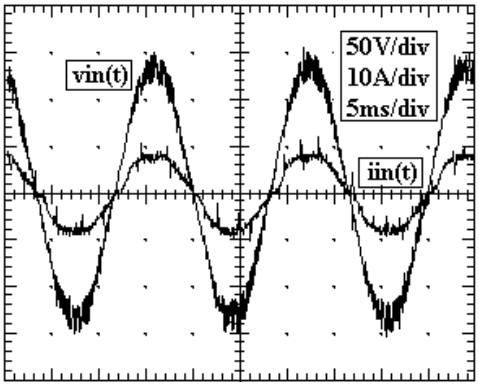

Fig. 13 - Input voltage and current to Boost/Inverter regulator.

The power factor correction to an AC/AC serial regulator usually is implemented through a parallel active filter, that difficult the PFC implementation to this converts family.

The output waveforms to both converters are shown in Fig. 14. The output performance to AC/AC serial regulator is presented with Vo=220Vrms, Po= 1060W, efficiency of 97,8%. The output performance to Boost/Inverter regulator is presented with Vo=127Vrms, Po=600W, efficiency of 86%.

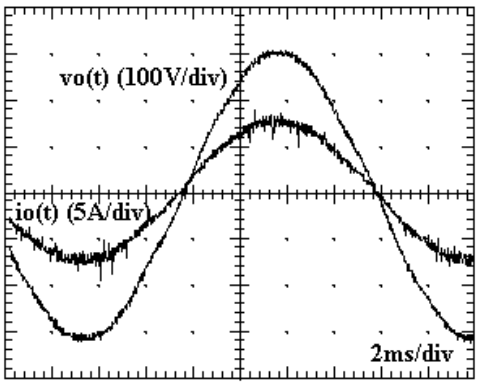

(a) - Output voltage and current to serial regulator.

(b)

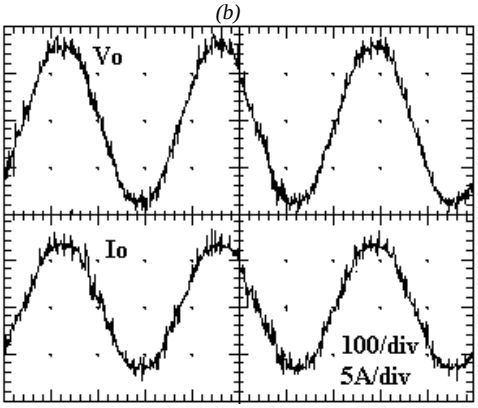

(b) - Output voltage and current to Boost/Inverter regulator.

Fig. 14 - Output waveforms.

V. Conclusion

In this paper, a comparison of two AC/AC regulators was presented.

The AC/AC serial regulator, as a serial active filter, has the advantage of to contribute only a percentage of total load power. To the serial regulator, the filter inductor function is provided by transformer reducing the basic configuration of the serial active filters.

An disadvantage of this structure is that to implement power factor correction is need an parallel which it will difficult the implementation

The Boost/Inverter regulator has the advantage of easy implementation of unity power factor; and the disadvantages of to supply the total load power; thus, the semiconductors used in this structure are more expensive that the one used in the AC/AC serial regulator.

VI. Acknowledgement

The authors acknowledge THORNTON INPEC, SIEMENS, CAPES, CNPQ and FAPEMIG by the support.

VII. References

[1] C. M. Cardoso, “Estudo e realização de um estabilizador de tensão alternada com transistor de potência”, Master Degree Disertation , UFSC, 1986.

[2] S. Kurokawa, “Desenvolvimento de um estabilizador de tensão alternada de variação contínua utilizando MOSFETs”, Master Degree Disertation, UFU, 1994.

[3] P. N. Engeti and V. B. Bhavaraju, “An Active Line Conditioner to Balance Voltages in a Thrre-Phase System”, Proc. IEEE transactions on Industry Aplications, pp. 287-292, 1996.

[4] J. C. Oliveira, “Projeto de uma Fonte Chaveada CA/CA de um único estágio com chaves bidirecionais”, Master Degree Disertation, UFU, 1996.

[5] Oliveira, J.C., De Freitas, L.C., Coelho, E. A. A., Farias, V. J. e Vieira Júnior, J. B., “A PWM AC/AC Full-Bridge used like a Shunt and a Serial Regulator”, EPE’97, setembro de 1997, Trondheim, Noruega.

[6] Moran, L., Werlinger, P., Dixon, J., Wallace, R.; “ A Series Active Power Filter Which Compensates Current Harmonics and Voltage Unbalance Simultaneously”, Proc. PESC’95 Atlanta, pp. 222-227, 1995.

[7] Kamran, F., Habetler, T.; “Combined Deadbeat Control of a Series-Parallel Converter Combination Used As a Universal Power Filter”, Proc. PESC’95 Atlanta, pp.196-201, 1995.