# A STABILIZED SINGLE PHASE ELECTRONIC AUTOTRANSFORMER

Emerson P. Trabach, Paulo F.S. Amaral, Domingos S.L. Simonetti and José L.F. Vieira

Federal University of Espírito Santo
Electrical Engineering Department
PO Box: 01-9011
29060-970 Vitória - Espírito Santo - Brazil
Phone: +55.27.335.2699 Fax: +55.27.335.2650
e-mail: j.vieira@ele.ufes.br

***Abstract* - A stabilized single phase electronic step-down autotransformer with improved switching characteristics is presented in this paper. It employs bi-directional switches in a four step PWM switching strategy for commutating inductive load currents. A low cost microcontroller is employed simplifying the control circuitry, giving robustness and reliability. A 600VA-220V/110V prototype operating at 18kHz has been built, and experimental results are presented validating the AC controller operation.**

## I – INTRODUCTION

Autotransformers are used in electric power conversion systems to provide voltage transformation, mainly when electric or electronic equipment have an input voltage different from the available mains voltage.

At low frequencies (50/60Hz) an autotransformer is bulk and heavy, which is an disadvantage for transportation. Its weight and size are a function of the flux density of the core material and maximum allowable core and winding temperature operation. The transformer size is inversely proportional to frequency and increasing the frequency allows the utilization of ferrite core, which reduces the autotransformer weight and size [1].

AC controllers are widely used in applications such as industrial heating, lighting control, induction motor drives for fan and pump load, inrush current limiting of induction motors, and voltage stabilizers. They can be also employed in order to achieve an electronic autotransformer [2].

Conventional AC controllers are based on phase control type, employing thyristors as switching devices. However, this rms voltage control method leads to a high harmonic content in the output voltage. Also, it produces high harmonic content in the utility line current reducing the input power factor of the AC controller respect to the load [2,3].

The AC controller problems can be avoided by using gate turn-off switches in a Pulse Width Modulation control [4,5]. This technique presents several advantages, including: high quality input current and output voltage waveforms, same input and output power factor over a wide load and input voltage range.

Nowadays, fast turn-off switches as MOSFETs and IGBTs can be used to perform AC controllers with PWM control [6,7]. These AC controller schemes require a dead time between the bi-directional switches to avoid short-circuit in the mains side. However, by using a dead time the inductive load current is interrupted, causing overvoltage across the switches.

Passive snubbers have been used to reduce the switch commutation losses. They provide an alternative path to the load current during the dead time [3]. However, the snubber power losses reduce the AC controller efficiency.

In spite of the overvoltage reduction across bi-directional switches, some differences between instantaneous input voltage and snubber capacitor voltage produces high current circulation through bi-directional switches. This short-time current circulating in the structure generates overvoltage in the switches of unacceptable values. A clamped circuit can be necessary to keep the voltage in an acceptable value [7].

A four step switching strategy for PWM operation of the bi-directional switches in AC controller has been proposed for commutating inductive load current [2]. This technique allows a safe current transition from one bi-directional switch to other. Meanwhile, it uses a very complex logic control and switching losses are not avoided [3].

This paper proposes a modified control approach respect that proposed by [2] in order to reduce switching losses. Additionally, the implementation is simplified by using a low-cost microcontroller, which easily allows to implement an stabilization loop.

## II – THE PROPOSED FOUR STEP SWITCHING STRATEGY

The proposed four step switching approach is shown in Fig.1, from which one can notice that two switch gate drives are maintained in high level during a half-cycle of the input voltage (the topology is shown in Fig. 2). As can be seen, during the positive half-cycle of the AC input voltage, the switches $Q_{1B}$ and $Q_{2B}$ are kept on, whereas in the negative half-cycle the switches $Q_{1A}$ and $Q_{2A}$ do so. This strategy reduces the switching losses compared to that presented in [2].

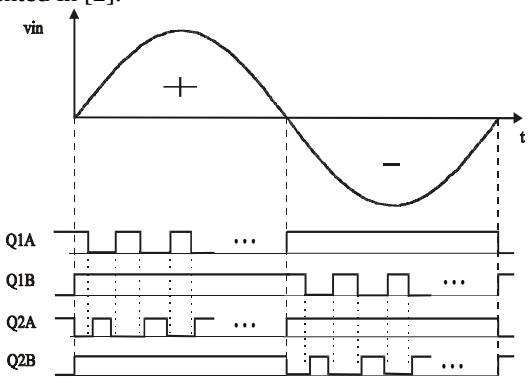


Fig.1 – Proposed four step switching strategy.

## III – STABILIZED ELECTRONIC AUTOTRANSFORMER

The power stage of the stabilized electronic autotransformer is shown in Fig.2. It employs an AC controller with LC input and output filters in order to eliminate high frequency harmonics.

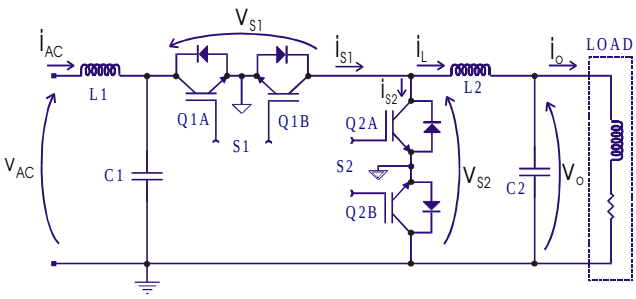


Fig. 2 – The power stage of the electronic autotransformer.

### A. The Principle of Operation

The AC controller operation supplying an inductive load can be explained by using the Fig. 3. As can be seen, the AC controller operation can be divided in four different regions as a function of the AC input voltage and the AC output current.

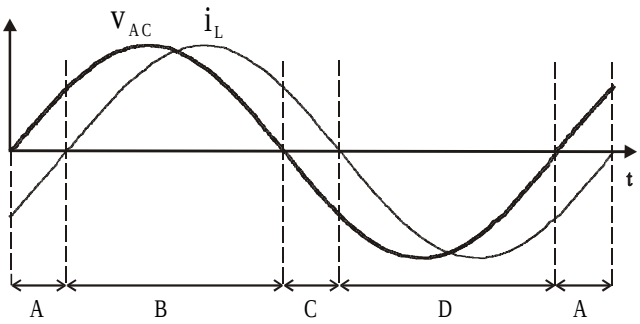


Fig. 3 – AC controller region of operation in function of Vac and $i_L$.

In order to simplify the analysis the following assumptions are made:

- all switches are ideal;
- the input filter capacitance $C_1$ is large enough to consider that capacitor as a voltage source in a switching period;
- the output filter inductance $L_2$ is large enough to consider that inductor as a current source in a switching period.

Based on the above assumptions, a half-cycle of the AC controller operation at the line frequency can be divided in two regions: A and B. It was considered the positive semi-cycle of the AC input voltage, as shown in Fig. 3.

### B. Region A Operation Stages

The AC controller commutation in this region includes four operation stages. The commutation process to turn the bi-directional series switch $S_1$ off and to turn the bi-directional parallel switch $S_2$ on, consist of four steps, shown in Fig. 4, which are described as follows:

**1st. Stage ($t_0$, $t_1$):** at instant $t_0$, the switch $Q_{1A}$ is turned on. This $Q_{1A}$ command do not affect any operation condition during this stage. The output filter inductor current $i_L$ is maintained freewheeling through switch $Q_{1B}$ and by the body diode of $Q_{1A}$. The parallel switch voltage $v_{S2}$ is equal to the input voltage $v_{AC}$. The equivalent circuit of this stage is shown in Fig. 4a.

**2nd. Stage ($t_1$, $t_2$):** at instant $t_1$, the switch $Q_{1A}$ is turned off, and this action do not affect the 1st. stage operation condition, as shown in Fig. 4b.

**3rd. Stage ($t_2$, $t_3$):** at instant $t_2$, the switch $Q_{2A}$ is turned on, establishing a freewheeling path to $i_L$. The body diode of $Q_{1A}$ is turned off, and the parallel switch voltage $v_{S2}$ become equal to zero. This stage ends at instant $t_3$ when the switch $Q_{2A}$ is turned off and the voltage $v_{S2}$ become equal to the input voltage $v_{AC}$. The equivalent circuit of this stage is shown in Fig. 4c.

During the 4th. Stage ($t_3$, $T_S$), the AC controller accomplish a operation condition as described by the 2nd. Stage. In this time interval, the output filter inductor current $i_L$ circulate through switch $Q_{1B}$ and by the body diode of $Q_{1A}$, as shown in Fig. 4b. Besides that, the parallel switch voltage $v_{S2}$ becomes equal to the input voltage $v_{AC}$.

The main waveforms for this commutation process are shown in Fig. 5.

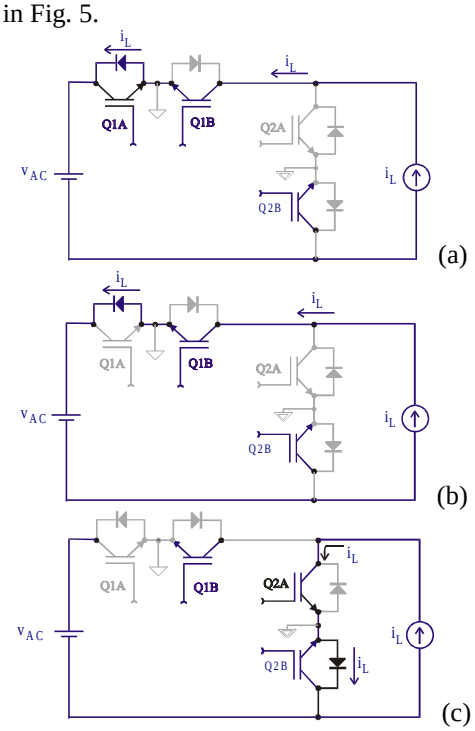


Fig. 4 – Operation stages for region A commutation process to turn $S_1$ off and to turn $S_2$ on.

### C. Region B Operation Stages

The AC controller commutation in this region also includes four operation stages.

The four steps to turn the series switch $S_1$ off and to turn the parallel switch $S_2$ on, shown in Fig. 6, are described as follows:

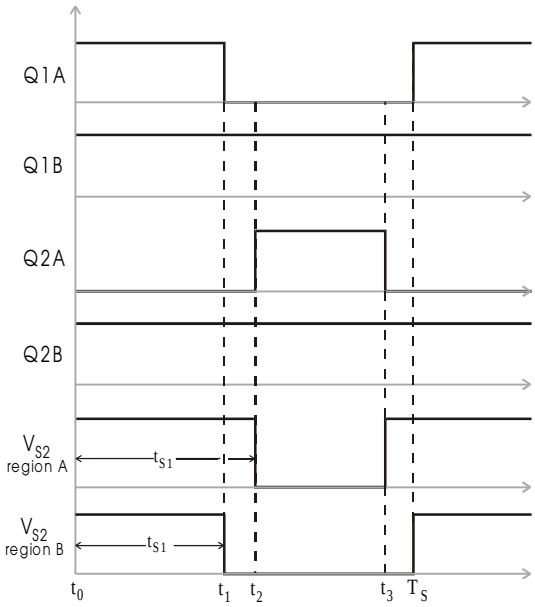

Fig. 5 – Main waveforms for the commutation process.

**1st. Stage ($t_0$, $t_1$):** at instant $t_0$, the switch $Q_{1A}$ is turned on, which turns the body diode of $Q_{2A}$ off. The inductor current $i_L$ starts to circulate through the series switch $Q_1$. The voltage $v_{S2}$ become equal to zero. The equivalent circuit of this stage is shown in Fig. 6a.

**2nd. Stage ($t_1$, $t_2$):** at instant $t_1$, the switch $Q_{1A}$ is turned off, providing a freewheeling path to $i_L$ through the parallel switch $Q_2$. The body diode of $Q_{1b}$ is turned off, and the parallel switch voltage $v_{S2}$ become equal to zero, as shown in Fig. 6b.

**3rd. Stage ($t_2$, $t_3$):** at instant $t_2$, the switch $Q_{2A}$ is turned on, the switch $Q_{2A}$ is turned off, and this action do not affect the 2nd. stage operation condition, as shown in Fig. 4c.

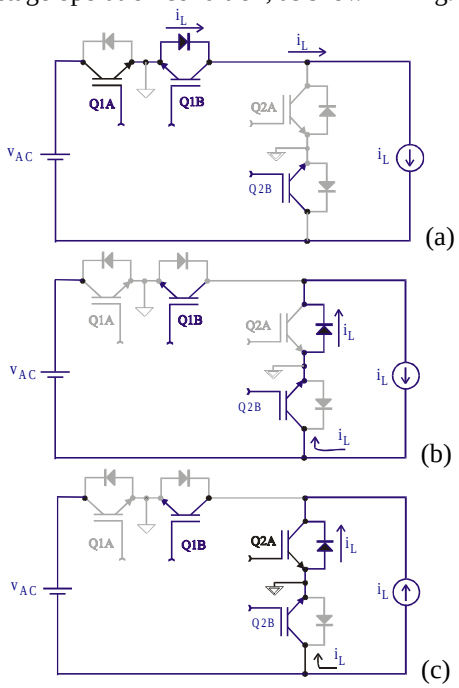

Fig. 6 – Operation stages for region B commutation process to turn S1 off and to turn S2 on.

During the 4th. Stage ($t_3$, $T_S$), the AC controller also accomplish a operation condition as described by the 2nd. Stage. The output filter inductor current $i_L$ freewheels through the parallel switch $S_2$ (switch $Q_{2B}$ and the body diode of $Q_{2A}$), as shown Fig. 6b, and the parallel switch voltage $v_{S2}$ is equal to zero.

The main waveforms for this commutation process are also shown in Fig. 5.

## IV – RELEVANT ANALYSIS

The parallel switch voltage as a function of the duty ratio, is given by:

$$V_{S2} = V_{AC}\sqrt{d} \tag{1}$$

$$d = \frac{t_{S1}}{T_S} \tag{2}$$

where:

$V_{S2}$ – is the rms voltage of the parallel switch;
$V_{AC}$ – is the rms input voltage;
d – is the AC controller duty-cycle;
$t_{S1}$ – is the series switch on-time;
$T_S$ – is the switching period

As can be seen from Fig. 5, the $t_{S1}$ deviation in Region A and B is due to the switches turn on and turn off times.

The high frequency output filter ($L_2$ - $C_2$) design can be performed in order to reduce the reactive power requirements, according to the procedure described in [8]. Therefore, the rms voltage across $L_2$ and the rms current through $C_2$, in 60Hz (line frequency), can be neglected.

The rms output voltage $V_0$ can be considered equal to the rms voltage of the parallel switch $V_{S2}$, since $V_{L2}$ rms, in 60Hz, is neglected. In addition, the rms output filter inductor current $I_L$ can be also considered equal to $I_0$, since $I_{C2}$ is neglected too.

$$I_L = I_0 = \frac{P_0}{V_O} \tag{3}$$

where:

$P_0$ – is the rms output power;
$V_0$ – is the rms output voltage;
$I_0$ – is the rms output current;
$I_L$ – is the rms output filter inductor current.

The series and parallel switches are always conducting in a complementary way, which results in the following equation:

$$I_L = \sqrt{I_{S1}^2 + I_{S2}^2} \tag{4}$$

where:

$I_{S1}$ – is the rms current of the series switch;
$I_{S2}$ – is the rms current of the parallel switch.

The series and parallel switch currents as a function of the duty ratio can be obtained in a straightforward way as:

$$I_{S1} = I_L\sqrt{d} \tag{5}$$

$$I_{S2} = I_L\sqrt{(1-d)} \tag{6}$$

## IV – AC CONTROLLER CONTROL CIRCUIT

The AC controller control circuit is shown in Fig. 7. It is based on a microcontroller from Microchip Technology Inc. PIC family 16C71. It is a low cost and high performance microcontroller, that employs CMOS technology and has a RISC type architecture. Also it can be programmed in C or Assembly languages. This microcontroller presents I/O ports capable of handling up 25mA current (input) and 20mA (output), what significantly reduces the need for extra interface circuits, such as buffers [9,10,11].

The microcontroller acquires 20 output voltage samples in each half-cycle of the line voltage, which are changed to digital form by an A/D converter. These samples are computed by the microcontroller to obtain the half-cycle mean value of the output voltage. The output voltage mean value is converted to the rms value.

In order to maintain the rms output voltage stabilized, the microcontroller performs a PI regulator, in each zero crossing of the input voltage, by using the rms value of the output voltage of the latest half-cycle. The results is used to define the duty-cycle of the current half-cycle.

## V – DESIGN EXAMPLE

An AC controller design example is presented next.

a) Input Data:

- rms AC input voltage: $V_{AC}$ = 220V +/- 10%, 60 Hz;
- output power: $P_0$ = 600VA;
- rms output voltage: $V_0$ = 110V
- switching frequency: $f_s$ = 18 kHz;

b) AC controller parameters:

Equation (1) shows that by adjusting the AC duty-cycle the rms output voltage can be stabilized. Also, from this equation one obtains:

$$d_{min} = \left(\frac{110}{220.(1.1)}\right)^2 = 0.2$$

$$d_{max} = \left(\frac{110}{220.(0.9)}\right)^2 = 0.31$$

From equations (3), (5) and (6) results: $I_L$ = 5,45A, $I_{S1max}$ = 3,03A, and $I_{S2max}$ = 4,87A.

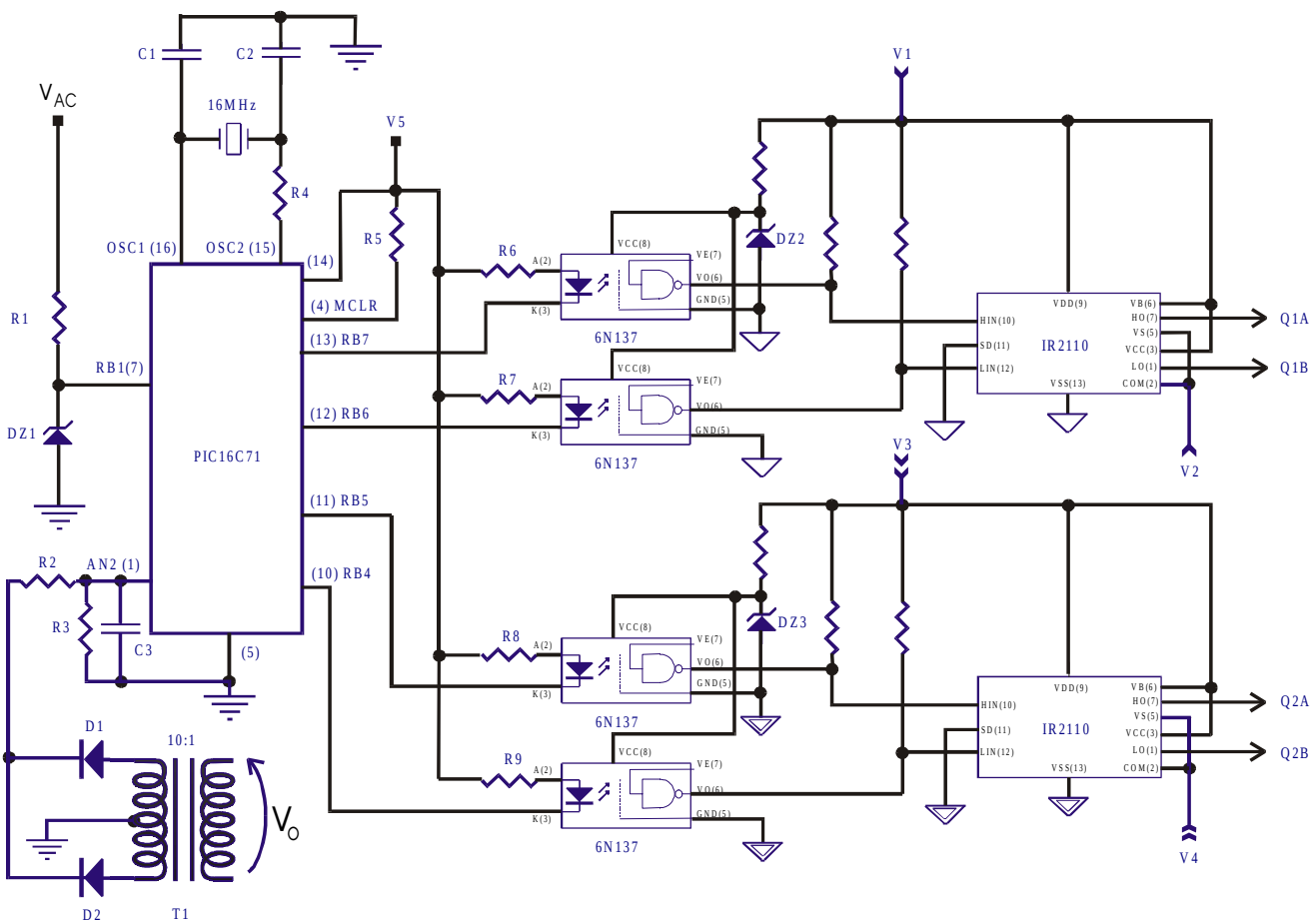


Fig. 7 – AC controller control circuit.

## VI – EXPERIMENTAL RESULTS

In order to validate the proposed stabilized single phase electronic autotransformer a 600VA prototype has been built to meet the input data specifications. It converts the 220V rms of the utility line to a stabilized output of 110V rms.

The main parameter and components are the following:

- switches: IGBTs IRG4PC50UD (IR);
- input filter: $L_1$ = 2.3 mH and $C_1$ = 10 μF;
- output filter: $L_2$ = 2.3 mH and $C_2$ = 2.4 μF;

The experimental waveforms obtained for a inductive load are shown in Figs. 8 - 11. The high frequency voltage across the bi-directional parallel switch $S_2$ is shown in Fig. 8. The AC controller output waveforms ($v_o$, $i_o$) are shown in Fig 9, whereas Fig. 10 shows the output voltage harmonic content and Fig. 11 shows the output current harmonic content. From the results shown in Figs. 9, 10 and 11 one can see the high quality waveforms produced by this electronic autotransformer.

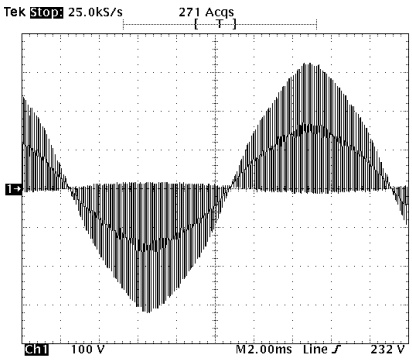


Fig. 8 – Bi-directional parallel switch voltage $v_{S2}$ (100V/div), time scale: 2ms/div.

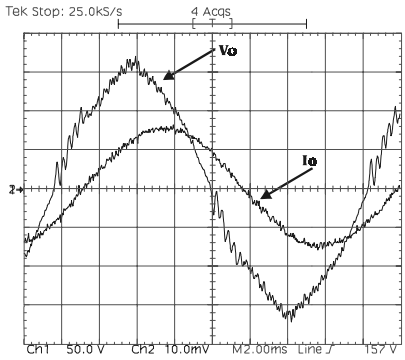


Fig. 9 – AC controller output waveforms: $v_0$(50V/div) and $i_0$ (5A/div). Time scale: 2ms/div.

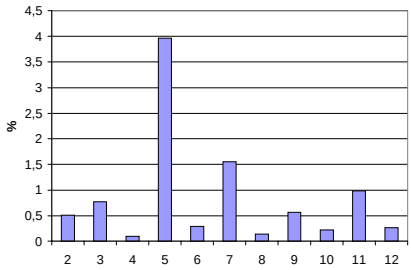


Fig. 10 – Output voltage harmonic content.

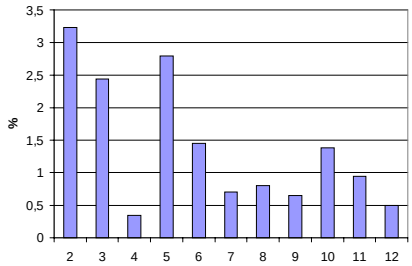


Fig. 11 – Output current harmonic content.

The experimental waveforms obtained for a resistive load are shown from Figs. 12 to 18. The AC controller input waveforms are shown in Fig. 12, whereas the output voltage and current are shown in Fig. 13.

The bi-directional series switch waveform at line frequency is shown in Fig. 14.

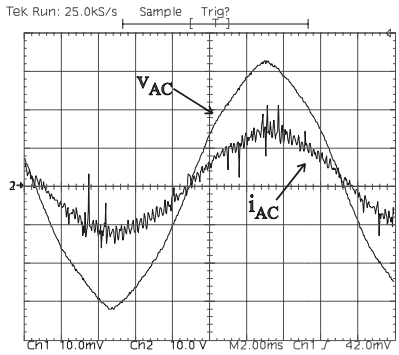


Fig. 12 – AC controller input waveforms for a resistive load: $v_{AC}$(100V/div) and $i_{AC}$ (5A/div). Time scale: 2ms/div.

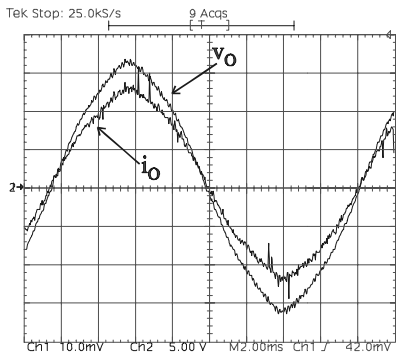


Fig. 13 – AC controller output waveforms for a resistive load: $v_0$(50V/div) and $i_0$ (5A/div). Time scale: 2ms/div.

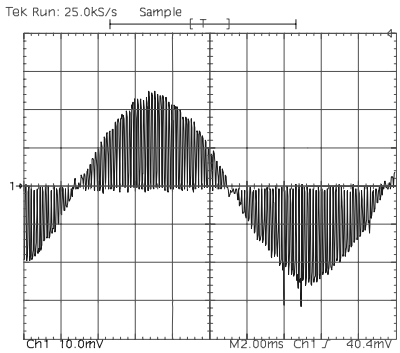


Fig. 14 – Bi-directional series switch current $i_{S1}$ (5A/div), time scale: 2ms/div.

The series switch high frequency waveforms ($v_{s1}$, $i_{s1}$) are shown in Fig. 15, whereas the parallel switch waveforms ($v_{s2}$, $i_{s2}$) are shown in Fig. 16.

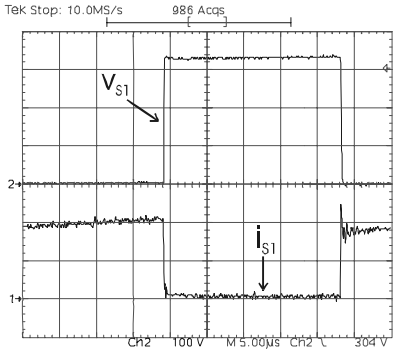


Fig. 15 – Series switch high frequency waveforms: $v_{S1}$(100V/div) and $i_{S1}$ (5A/div). Time scale: 5µs/div.

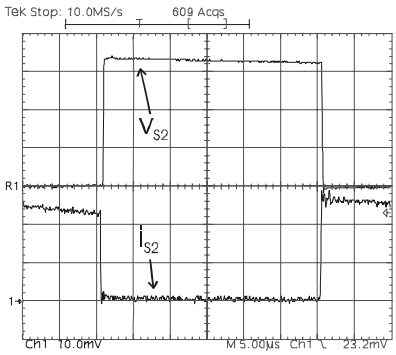


Fig. 16 – Parallel switch high frequency waveforms: $v_{S2}$(100V/div) and $i_{S2}$ (5A/div). Time scale: 5µs/div.

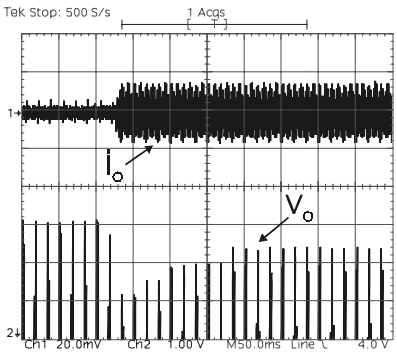


Fig. 17 – Output current and voltage (peak) response for a step load (inserting): $v_0$(10V/div) and $i_0$ (10A/div). Time scale: 50ms/div.

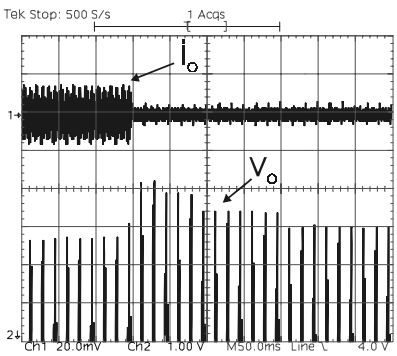


Fig. 18 – Output current and voltage (peak) response for a step load (removing): $v_0$(10V/div) and $i_0$ (10A/div). Time scale: 50ms/div.

Finally, the output voltage and current for load changes are shown in Fig. 17 (load increase) and Fig. 18 (load reduction). The output voltage caption concerns to its peak value (10V/div), showing that the AC output voltage is controlled and presents a minimal variation.

## VII – CONCLUSION

This paper introduces an improved four step strategy for PWM operation of the bi-directional switches in an AC controller. By using this approach a stabilized single phase step-down electronic autotransformer is obtained, which presents low switching losses and inductive load current commutation capability. The control circuitry is simplified employing a low cost microcontroller increasing the AC controller reliability. Experimental results validating the AC controller operation have been obtained for a 600VA prototype operating at 18kHz, which transforms 220V rms of the utility line to a stabilized output of 110V rms.

## VIII – REFERENCES


[1] M. Kang, Prasad N. Enjeti and Ira J. Pitel, “Analysis and Design of Electronic Transformers for Electric Power Distribution System”, IEEE – Industry Application Society Annual Meeting Conference Records, pp. 1689-1694, 1997.

[2] Prasad N. Enjeti and Sewan Choi, “An Approach to Realize Higher Power PWM AC Controller”, IEEE – APEC Conference Records, pp. 323-327, 1993.

[3] Marco Valério M. Villaça, “Design , Analysis and Implementation of a New Cell for Soft Commutation of Bi-Directional Switches”, Ph.D. Thesis, UFSC, Florianópolis - SC, 1997 (in Portuguese).

[4] A. Mozder Jr. And B.K. Bose, “Three-phase AC Power Control Using Power Transistor”, IEEE – Transactions on Industry Applications, vol. IA – 12, pp. 499-505, Sept./Oct., 1976.

[5] G.N. Revankar, et al., “Symmetrical Pulse Width Modulated AC Chopper”, IEEE – Transactions on Industrial Electronics and Control Instrumentation, vol. 24, no. 1, pp. 39-45, 1977.

[6] João C. S. Fagundes, “Study and Realization of a Direct AC Controller” Ms. Thesis, UFSC, Florianópolis – SC, 1983 (in Portuguese).

[7] José I. Zafalon, “Contribution to the Commutation Study in Bi-Directional Switch Single Phase and Three Phase Converters”, Ms. Thesis, UFSC, Florianópolis – SC, 1986 (in Portuguese).

[8] B. D. Bedford and R. G. Hoft, Principles of Inverter Circuits, John Wiley & Sons, Inc., 1964.

[9] P.A.V. Lóss, M.M. Lamego, G.C.D. Sousa and J.L.F. Vieira, “A Single Phase Microcontroller Based Energy Meter”, IEEE – Instrumentation and Measurement Technology Conference, pp. 797-800, St. Paul, Minnesota, USA, May, 1998.

[10] Microchip Data Book, Second Edition, October 1992 [MIC 92a].

[11] Microchip Embedded Control Handbook, October 1992 [MIC 92b].