A NEW AC/AC SERIAL REGULATOR USING A CAPACITOR AS THE SERIAL COMPONENT

João Carlos de Oliveira Carlos Augusto Bissochi Jr Fábio Vincenzi R. S. Valdeir José Farias
Luiz Carlos de Freitas João Batista Vieira Jr
Universidade Federal de Uberlândia
Departamento de Engenharia Elétrica
Campus Santa Mônica -Bloco E
38400-902-Uberlândia-MG-BRAZIL
e-mail : batista@ufu.br

***Abstract* - This paper presents a new AC/AC serial voltage regulator using a capacitor as the serial element. It works an active filter, which supplies only a percentage of the total load power to regulate the output voltage. It operates similarly to the serial voltage regulator which uses a low frequency transformer. However, in this topology, the low frequency transformer was changed by a capacitor reducing weight and price. Principle of the operation, theoretical analysis, simulation and experimental results are provided.**

I. INTRODUCTION

Today, so many topologies are employed as AC/AC regulators. It can be seen, in commercial applications, voltage regulators using transformers with taps and switching regulators. These switching regulators have many topologies too, and may have AC/DC - DC/AC stages, using a DC link provided by a rectifier, a Boost pre-regulator and a Inverter circuit to transform DC in AC, or a AC/AC using a link AC with bi-directional switches. The Boost/Inverter converter features the advantage of the input power factor correction, all do it presents some disadvantage such as to contribute supplying the total load power and, in some cases, a large output filter stage.

The serial regulators, or serial active filters, DC/AC or AC/AC are employed as voltage regulators too. They can be employed in several applications, such as active line conditioner to balance voltages in a three-Phase system [1], serial active power compensator for compensation of the inductive reactance of AC transmission lines, increasing its power transmission capacity [2], and voltage regulation in single-phase systems [3, 4, 5 and 6]. A basic configuration of a common serial regulator (serial active filter) is showed in Fig. 1. This configuration needs a rectifier, a large capacitor and a filter stage before the low frequency transformer. This configuration employee a DC/AC conversion. This applications does not need to supply the total load power, but only the necessary to obtain a regulated output voltage.

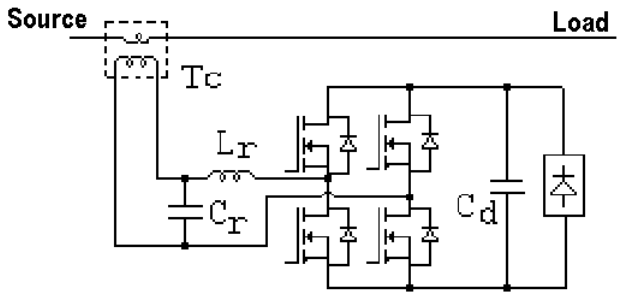

Fig. 1 - Common serial active filter used as DC/AC voltage regulator.

An AC/AC conversion is presented in [3, 4] as shown in Fig. 2. It uses a Full Bridge structure. The switches are bi-directional and the transformer operates in low frequency. As the serial voltage regulator with DC link, this serial regulator contributes supplying only a percentage of the total load power. Another advantage is that this topology does not need a filter inductor. This function is provided by the transformer, which reduce the basic configuration.

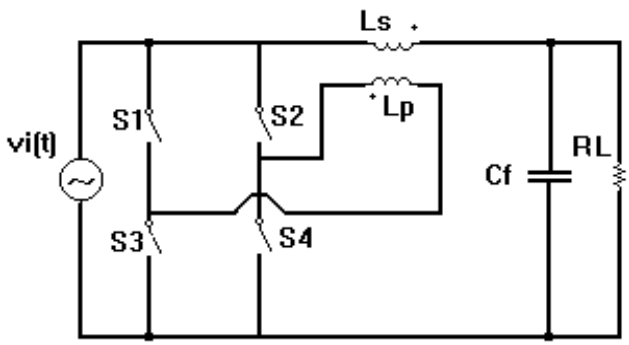

Fig. 2 - Active filter using as AC/AC voltage regulator.

Both topologies employee a low frequency transformer operating in system frequency.

The proposed application is formed by two current sources, implemented, each one, by a source voltage and a inductor, four active switches, four diodes and the output capacitor. The current sources operate complementarily, supplying the capacitor and modulating its voltage. The output modulated waveform voltage is determined by the control reference signal and can be sinusoidal, triangular, square or dc.

II. Circuit description and operation principle

This application can be implemented using Full Bridge or Half Bridge topologies.

Fig. 3 shows the proposed serial regulator using a Half-Bridge configuration.

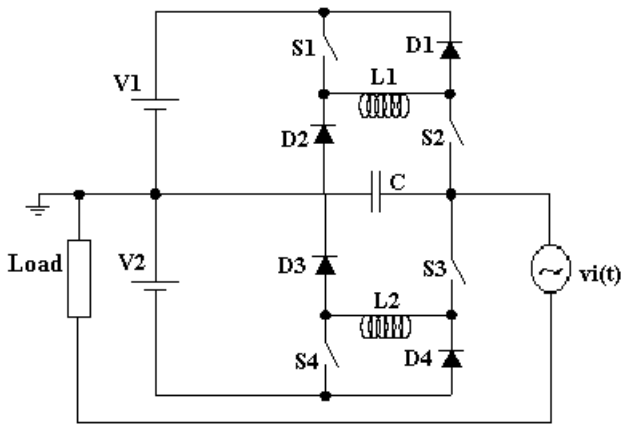

Fig. 3 - Proposed serial AC/AC Half Bridge voltage regulator.

Another configurations may be obtained using the Full Bridge converter. Fig. 4*a* and 4*b* shows these topologies.

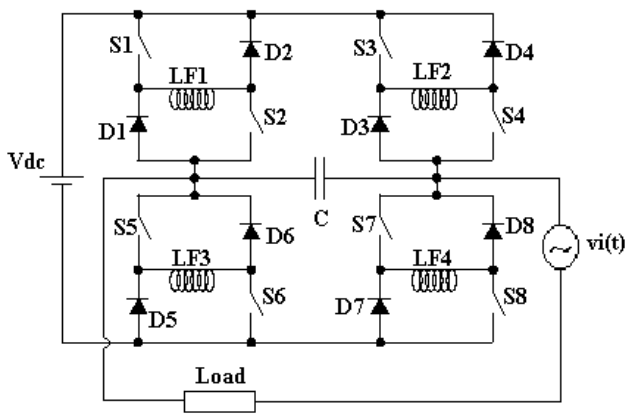

(a)

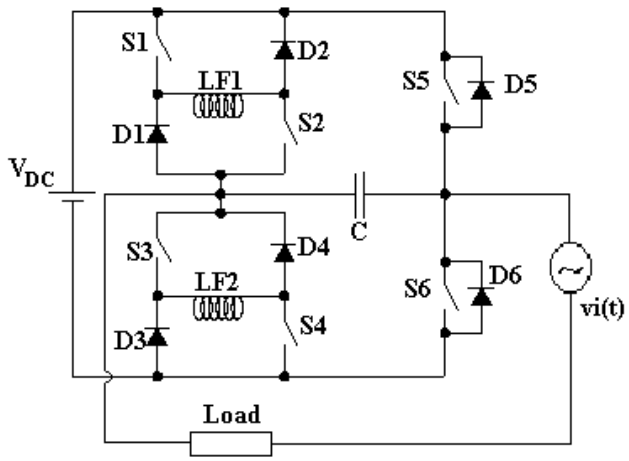

(b)

Fig. 4 - Serial AC/AC Full Bridge topologies to the proposed voltage regulator.

These applications, when used as serial voltage regulators, eliminate the low frequency transformer presented in all of the serial active filters.

The power stage diagram of the proposed circuit is composed by two current sources that are implemented to modulate the voltage across the output capacitor C. The Half Bridge configuration is basically two Forward converters operating as current source due to the inductors L1 and L2. The modulated voltage across the capacitor C is added or subtracted at the system voltage, obtaining a regulated voltage across the load.

An advantage of this topology is that it does not need a filter stage, the modulated voltage across the output capacitor is a quasi-sinusoidal waveform, with low harmonic content.

III. Principle of the operation

This topology can be analyzed as two PWM Buck CC converters operating separately, each one having two operating stages, a linear and an energy restoration stage.

The operating principle is presented as follows:

First stage (Fig. 5) - When switches S_1 e S_2 are turned on, the voltage across the capacitor rises due to the current source IL1, implemented by V1 and L1. During this stage, if there is energy stored in the filter inductor L2, the diodes D_3 and D_4 are directly polarized. This energy returns to the power supply V2 through the output capacitor C, contributing to increase its voltage. Thus, one Forward converter has a transferring power stage, and the other an energy restoration stage.

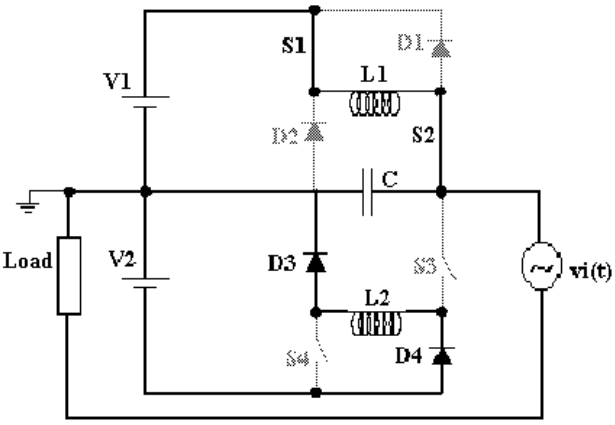

Fig. 5 - Transferring power through S1 and S2.

Second stage (Fig. 6) – This stage is the complement of the first stage. When switches S_3 and S_4 are turned on, the current source (V2 and L2) forces the voltage on the capacitor to decrease. The diodes behavior are the same as described in the first stage. If there is energy in the inductor L1, diodes D1 and D2 are directly polarized and L1 returns its energy to V1.

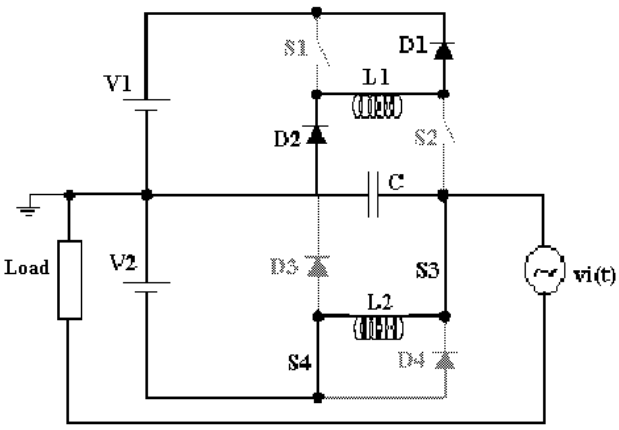

Fig. 6 - Transferring power through S3 and S4.

It can be noticed that the each current source must supply a current higher than the load current in order to decrease the capacitor voltage.

IV. Relevant Equations

It is assumed that:

1)- During a switching period, the input and output voltages are constant, because the switching frequency (fs) is considerably larger than the line frequency (f);

2)- The power semiconductors are ideal;

3)- V1=V2 and LF1=LF2.

Using the equations of the diverse operating stages, it can be obtained the following static gain of the proposed application.

$$\overline{V_O} = \overline{V_i} + (2D-1)V \qquad (1)$$

Where:

$\overline{V_O}$ = Output medium value;

$\overline{V_i}$ = input medium value;

$V = V1 = V2$ = DC source voltages;

D = S1 and S2 Duty cycle.

IV. Simulation and Experimental Results

The proposed circuit, presented in Fig. 3, was analyzed by simulation. A prototype has been built and measurements were taken in order to demonstrate the circuit operation and to validate the proposed circuit. The parameters are as follow:

Simulation	***Experimental***
D1, D2, D3 e D4= HFA15TB;	D1, D2, D3 e D4= HFA15TB;
S1, S2, S3 e S4=IRFP460;	S1, S2, S3 e S4=IRFP460;
Vi = 180 Vrms	Vi = 106 Vrms
V1= V2= 60V	V1= V2= 30V
f_S = 50kHz;	f_S = 50kHz;
Vo = 220Vrms;	Vo = 127Vrms;
L1= L2= 1mH;	L1= L2= 1mH;
P_0 = 1060W;	P_0 = 600W;
RL = 48Ω.	RL = 27Ω.
C= 8 uF	C= 8 uF

The software used to simulate was Microsim Pspice 8.0.

Figs. 7*a* and 7*b* show simulation and experimental waveforms to the currents through L1 and L2 inductors. It can be noticed that one current source prevail in the positive semi cycle and the other in the negative.

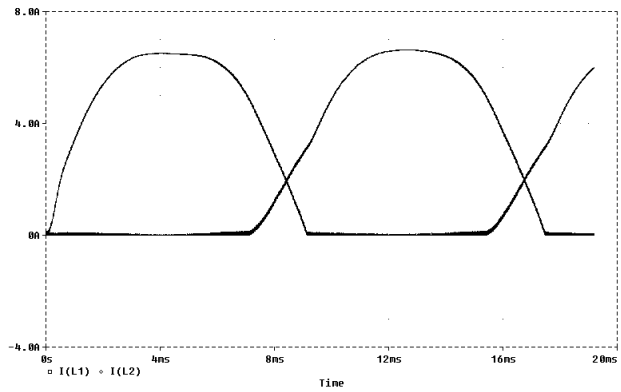

(a)

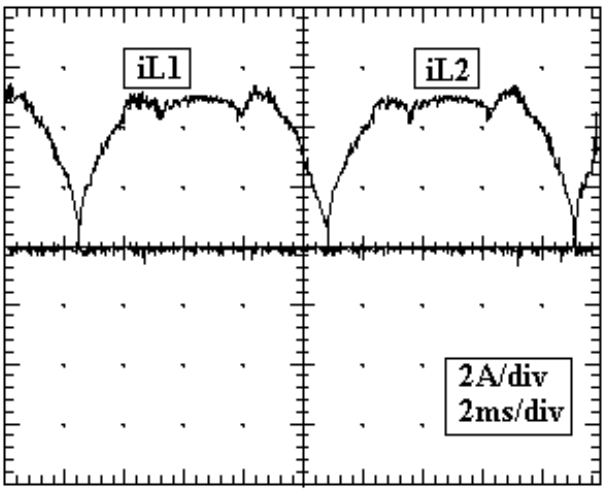

(b)

Fig. 7 - L1 and L2 currents.

The voltage across the switches and diodes are presented in Figs. 8*a* and 8*b*. The switch and diode voltages are the V1 voltage source plus the capacitor sinusoidal voltage.

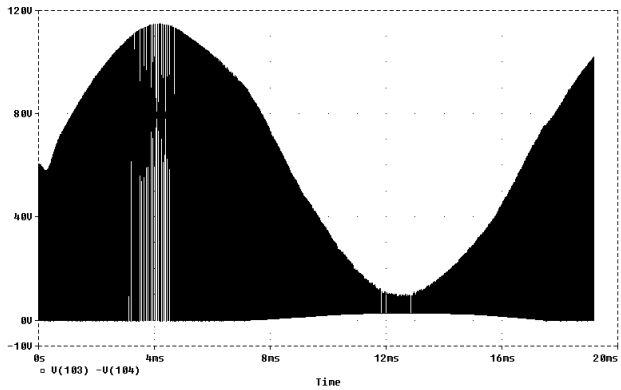

(a)

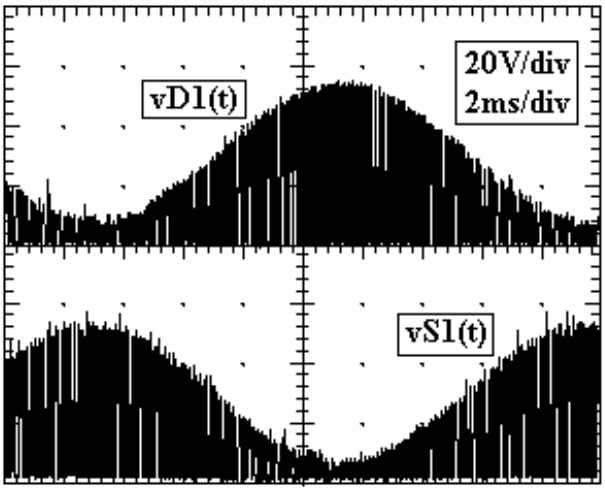

(b)

vD1(t) - Diode waveform voltage;
vS1(t) - Switch waveform voltage;

Fig. 8 - Switch and diode voltages.

The performance of the proposed circuit can be observed in Figs. 9*a* and 9*b*. The voltage capacitor is appropriately added or subtracted to voltage system to obtain a regulated load voltage. It was obtained an efficiency of 93,2% for Po= 600W.

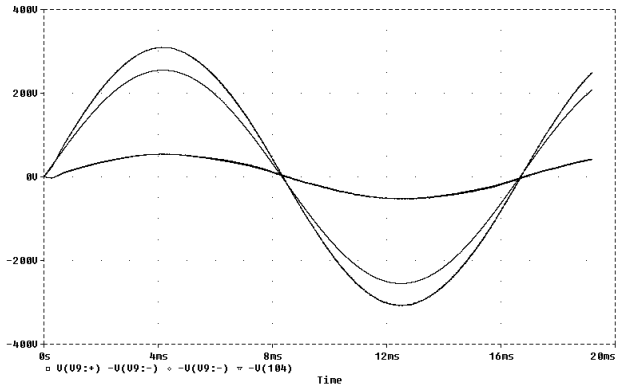

(a)

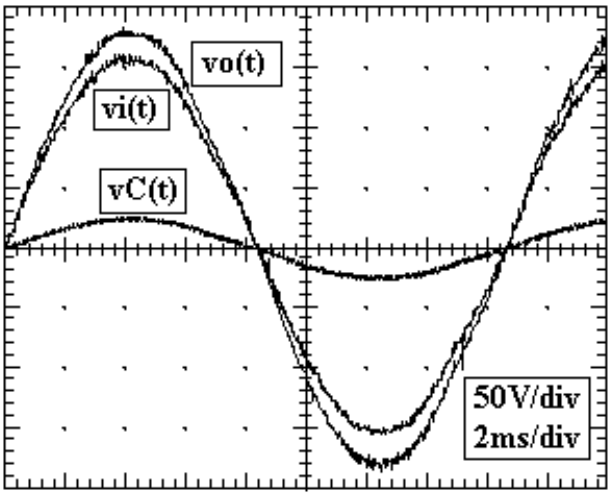

(b)

vo(t) - Output voltage ;vi(t) - Input voltage; vC(t) - Capacitor voltage;

Fig. 9 - Performance of the proposed circuit.

The Load voltage and current is presented in Fig.10.

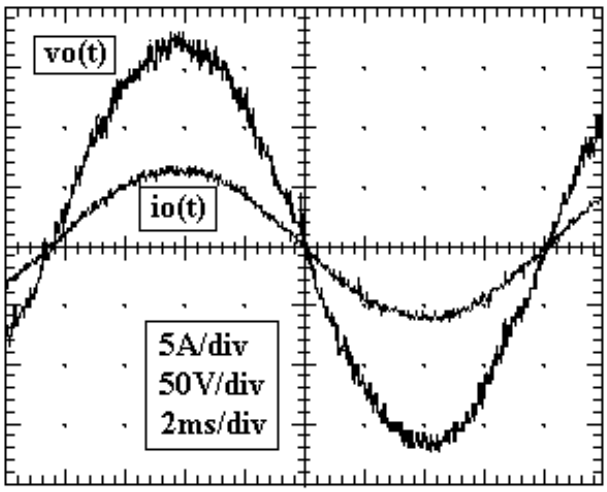

Fig. 10 - Load voltage and current.

V. CONCLUSION

It can be noticed that the proposed regulator operates as a common serial regulator using a capacitor as the serial element instead of a transformer;

It has a better efficiency than the regulator with transformer due to transformer's losses and its weight is lower too;

The proposed circuit does not need a filter stage like others serial regulators;

To obtain an almost constant efficiency over the range of operation, the voltage in sources V1 and V2 should be slightly higher than the capacitor voltage peak value, thus reducing switching and conduction losses;

The proposed converter applications include:

- Switched audio power amplifier;
- Electronic Ballast;
- Compensators;
- Voltage stabilizers;
- Machine drives;
- Others.

VI. ACKNOWLEDGEMENT

The authors acknowledge THORNTON INPEC, SIEMENS, CAPES, CNPQ and FAPEMIG by the support.

VII. REFERENCES

[1] P. N. Engeti and V. B. Bhavaraju, " An Active Line Conditioner to Balance Voltages in a Thrre-Phase System", Proc. IEEE transactions on Industry Aplications, pp. 287-292, 1996.

[2] P. G. Barbosa and E. H. Watanabe, "Advanced Series Reactive Power Compensator Based on Voltage Source Inverters", COBEP'95 São Paulo, pp. 03-08, 1995.

[3] J. C Oliveira, "Projeto de uma Fonte Chaveada CA/CA de um único estágio com chaves bidirecionais", Dissertação de Mestrado, UFU, 1996.

[4] Oliveira, J.C., De Freitas, L.C., Coelho, E. A. A., Farias, V. J. e Vieira Júnior, J. B., "A PWM AC/AC Full-Bridge used like a Shunt and a Serial Regulator", EPE'97, setembro de 1997, Trondheim, Noruega.

[5] Moran, L., Werlinger, P., Dixon, J., Wallace, R.; " A Series Active Power Filter Which Compensates Current Harmonics and Voltage Unbalance Simultaneously", Proc. PESC'95 Atlanta, pp. 222-227, 1995.

[6] Kamran, F., Habetler, T.; "Combined Deadbeat Control of a Series-Parallel Converter Combination Used As a Universal Power Filter", Proc. PESC'95 Atlanta, pp.196-201, 1995.