An overview about AC/DC converters applied to plasma torch

Mário Gonçalves Garcia Jr [1)], Lourenço Matakas Jr [2)]
[1)]Laboratório de Plasma - Instituto de Pesquisas Tecnológicas – IPT Av. Prof. Almeida Prado 532 – Cidade Universitária – São Paulo – SP – BRAZIL - CEP 05508-901 – tel +55(11)3767-4458 fax + 55(11)3767-4010 E-mail mggarcia@ipt.br
[2)] Laboratório de Eletrônica de Potência – Escola Politécnica da USP – PEA E-mail matakas@pea.usp.br

Abstract – Nowadays there is an increasingly use of plasma torches in processes that requires high temperatures, such as metal recovering and residues treatment. Special care must be taken to the problems related to power quality and process efficiency. Commercially available power supplies for torches fail to satisfy the above conditions. After a brief introduction on the electric arc behavior and plasma torches, this paper focuses on presenting and comparing four types of rectifiers suitable for arcing loads. The three-phase, self commutated, current source converter is shown to be a potential candidate to adequately solve the problems associated to the previous cases.

I. INTRODUCTION

A process based on the use of a plasma system for recovering metals and treatment of residues has been developed. For instance, on aluminum recovering, an economic analysis shows that the operating cost of plasma system are at least, 23% cheaper than the traditional process using air/gas or air/oil burners [2,3]. The plasma process also does not generate either of the common residues produced by burners. The maintenance cost of plasma process is also lower than that of the traditional process. The plasma system is based on a plasma torch that produces a stable electric arc that increases the temperature of a gas up to it reaches the "Plasma State". After briefly introducing the electric arc behavior, the types of plasma torches and the arc starting methods, that paper shows a detailed discussion about the existing power supplies for torch applications. AC side power factor, harmonics and energy efficiency are discussed based on experimental data using commercial power supplies. Two strategies based on self-commutated converters are presented, that overcome the problem associated to the conventional supplies.

II. PLASMA SYSTEMS

A. Electric arc

The electric arc is a well known, but by no means well understood, phenomenon. Basically, the arc is an electric discharge in a gas, between two electrodes. There are a number of features that distinguish an arc from others discharge modes, as the relative high current density that may reach values of 100 A/cm². The electric arc attaches to the electrodes and in particular to the cathode, in form of tiny spots in which current densities can be as high as 10^6 A/cm² [5,6]. The associated heat flux densities are in the order of 10^6 to 10^7 W/cm² requiring special precautions to ensure integrity of the electrodes. The term "arc" is usually applied only to stable or quasi-stable discharges, and an arc may be regarded as the ultimate form of discharge which will be reached under all conditions if the current through the gas is made large enough.

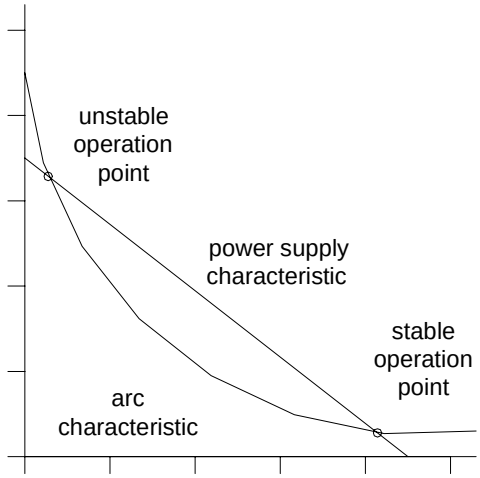

Figure 1 – Arc and power supply characteristics

The fundamental property of most arc devices is the negative differential arc resistance at DC and low frequency AC. The voltage-current characteristic in principle is shown in Figure 2. The actual shape of this arc characteristic depends, of course, on plasma generator geometry, type of gas, gas flow, pressure, etc. The breakdown voltage must be overcome to ignite the arc. After ignition, the arc voltage decreases with increasing values of current. The differential resistance: R_d= dU/dI is negative as can be seen from the curve. At very high currents, usually above the normal operating range, R_d becomes slightly positive. For a plasma generator in the megawatt range, R_d might be in the order of –0.1 to –1 Ω. R_d is often referred simply as the arc resistance. If the current excursion, dI, is rapid, the corresponding voltage differential would be less negative, mainly due to the thermal inertia of the gas in the arc channel. The associated time constant is in the order of 1 ms and the effect becomes noticeable at 50 or 60 Hz. R_d generally turns positive in the kilohertz range. The thermal inertia will also cause hysteresis effects at higher frequencies.

B. Starting an arc

An electric arc may be started basically by three different ways:

1) By electrode contact: using mobile electrodes, a contact may be established, after an electric potential is applied to them. The short circuit current heats the contact point to temperature levels sufficient for termoionic emission from the cathode. At same time electrode

material is evaporated and ionized at the contact point providing the required charge carries for developing an arc as soon as the electrodes are separated, *drawing an arc*. If the electrodes cannot make contact each other, an auxiliary conductive material (metal or graphite) can be used to start the arc.

2) By preionization of discharge gap: In this way, the electrode gap is made electrically conductive in a sufficient time to start the arc. The most common method is to apply a high frequency spark generator as an auxiliary plasma source that supplies the necessary carriers between the electrodes. Other method is to use a thin wire connecting the electrodes gap. The voltage applied causes to a wire explosion, supplying the necessary charge carriers for establishing the arc. Other sources of ionization may be used to start an arc, as α, β, γ and x-rays, UV and laser radiation. Also chemical process may be used to start an arc, for instance, "a burning match!".

3) High voltage breakdown: this method is based on the usual dielectric, high-voltage breakdown of a discharge gap under steady state conditions. The breakdown voltage is an increasing function of the gas pressure and the size of the electrode gap. In atmospheric air, approximately 30 kV are necessary to break down a gap of 1 cm. For most high pressure arc applications this method can not be used because of the extremely high voltages involved.

C. Plasma torch

It is a device that combines means of supplying and controlling gas flow, with at least one electrode witch is capable of carrying several hundreds Amperes or more current for many hours. Basically there are to kind of plasma torch, the Transferred arc Plasma Torch (TPT) and the Non-Transferred Plasma Torch (NTPT) [4]. In some applications, we can find hybrid torches, merging the features of the TPT and the NTPT. The NTPT is basically composed by two axial tubular electrodes electrically isolated each other or an electrode and a tube, where is applied the power supply.

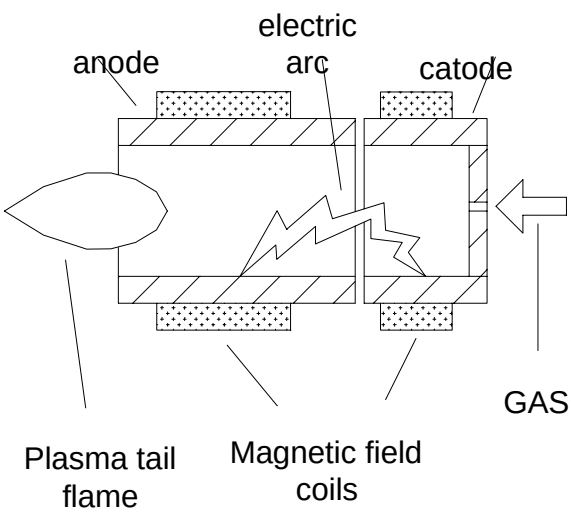

Fig 2 – Non-Transferred Plasma Torch (NTPT). Note that the Plasma tail flame is just formed by high temperature gas

By an auxiliary spark generator, the preionization of the gap between the electrodes is done and the arc is established.

Gas injected inside the tube forces the arc to increase its length, resulting in higher values for the arc voltage and consequently for the arc power. The turbulence and the magnetic field produced by the coils (figure 2) forces the arc to move circularly inside the internal wall. This movement avoids electrode erosion [7]. The gas, in contact with the arc, has its temperature raised depending on gas flow, type of gas and power of arc, reaching values above 20,000 K.

Arc heaters of this type have been scaled with similar geometry from torches rated at 15 kW to torches rated at 50MW. The TPT is used when, for example, we need to heat metal. In this case the efficiency is almost always higher if the arc is transferred direct to metal mass rather than to a gas and from gas to metal.

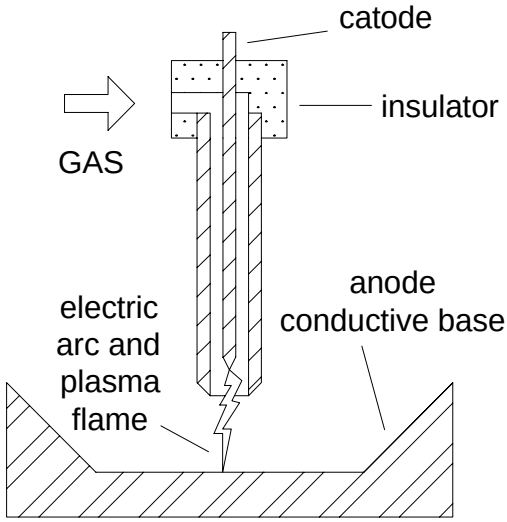

Fig. 3 – Transferred Plasma Torch (TPT). Note that composes the plasma flame.

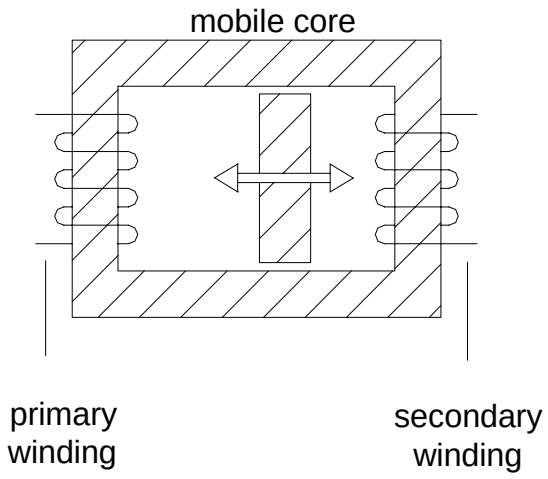

Fig. 4 – Transformer with magnetic shunt

III. THE ELECTRIC POWER SUPPLY

A. Requirements

The negative arc resistance prohibits direct operation from a voltage source with low internal impedance. The voltage would either be too low to sustain the arc or too high, resulting in runaway overcurrents, depending upon the position of the actual operating point (see Figure 2). The ideal power supply for an arc would be a current source. Stable operation can be achieved by connecting a resistor in series with the voltage source, provided that it compensates the negative arc resistance (Figure 3). The operating line for the power supplies must haves a more negative slope than the arc characteristic. Thus, only one of the two possible intersection points represents a stable operation point. If the current passes below the unstable operation point, the arc will extinguish since the required voltage exceeds the available voltage. The ohmic losses in the resistor will always be larger that compared to the plasma power. So this method of stabilization is only practical for low power installations.

B. Converter topologies

In most of the plasma torches applications, some converters are very used, because they are robust and cheap. However, they usually present not only low efficiency, but also harmonics and reactive power at the AC side. There are basically two types of converters. In the naturally commutated ones, the output power is controlled by the thyristor phase angle control or by a magnetic shunt. In the self commutated ones, using GTOs or transistors, not only the power, but also the reactive power and harmonics can be controlled exclusively by gate control.

1) Transformer with magnetic shunt

This type of power supply is very used in low power plasma torch applications such as small processes, plasma welding or plasma cutting system. The power control is done on the main transformer. As it can be seen on the schematic in Figure 4, a mechanism moves a magnetic core, called magnetic shunt, through the transformer core, giving a optional path to the magnetic flux created by the primary winding. Thus, we can vary the total flux that cross the secondary winding, limiting total output power. A non-controlled diode bridge at the secondary side of the transformer does the AC/DC conversion. AC side currents are nearly sinusoidal (figure 5) due to the filtering effect produced by the correction capacitors and the transformer. This method of power control has a poor current regulation because of the absence of current feedback. If the process has a high turbulent atmosphere or a great amount of gas generation, the converter current can oscillate, extinguishing the arc.

The energy efficiency decreases at low output power, as shown in figure 6, obtained from experimental data. The behavior of the power factor as a function of the output power is presented in figure 7.

The experiments were conduct with a 100kW converter (made by Linde) and a 100kW transferred arc torch (fig. 3)

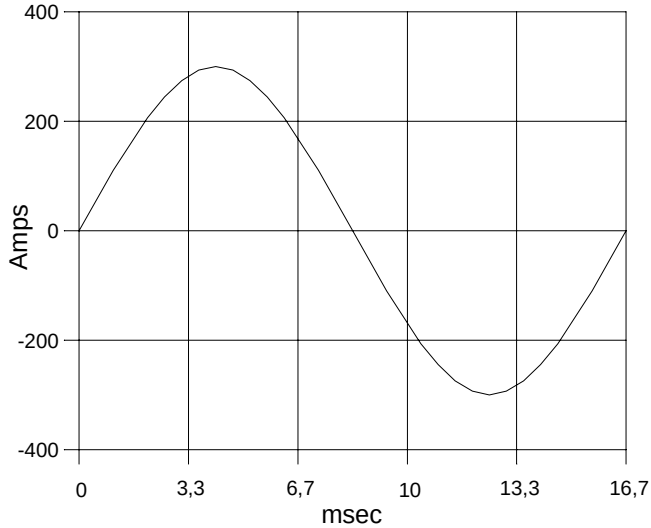

Fig. 5 – AC side Current for the Magnetic shunt supply

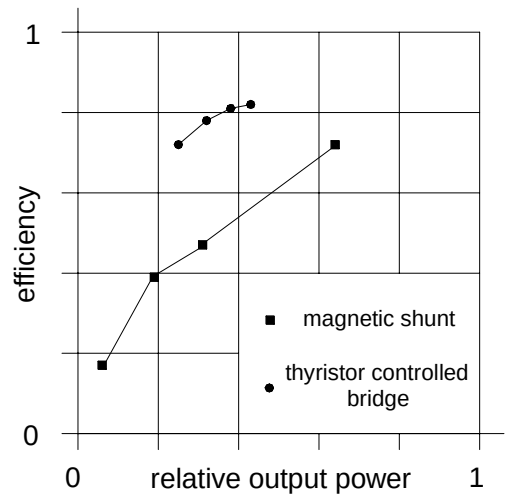

Fig. 6 –Efficiency x Relative Output Power

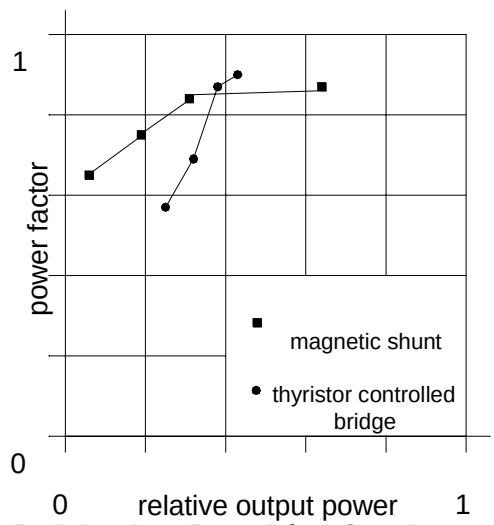

Fig. 7 –Input Power Factor x Relative Output Power

2) Thyristor Controlled Bridge

The most common converter used today is the thyristor converter, due to its high power-handling capability, and its low cost. The configurations used are the six or the twelve pulses controlled bridges (fig. 9). The controlled twelve pulses bridge presents AC currents with low harmonic content (fig. 8), reducing the size of the harmonics filters. Even so, this configuration uses more thyristor and a special transformer with two groups of independent windings. This has a direct effect on the efficiency of converter.

For the idealized converter model, the power factor is given by $FP = 0.955\cos\alpha$. So, the power factor is low for low values of DC voltages (higher α, lower power), requiring costly compensation systems with automatic commutation of the capacitor groups.

The behavior of the converter efficiency and power factor as a function of the output power is shown in figures 6 and 7. The experimental data were obtained from a 500kW twelve-pulse converter (made by Rubicon) and a 400 kW non-transferred arc torch, operated at the maximum power level of 230kW.

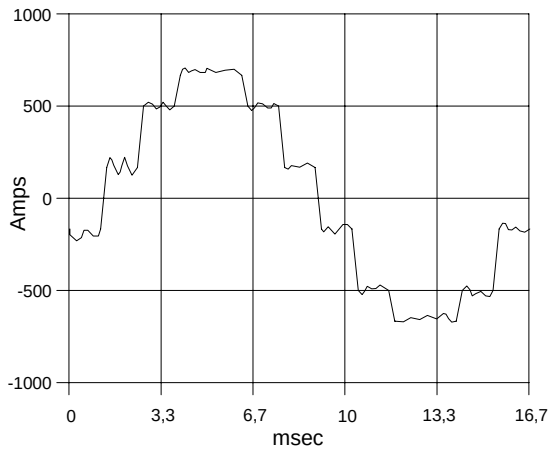

Fig. 8 – AC side Current for the Twelve Pulses Converter

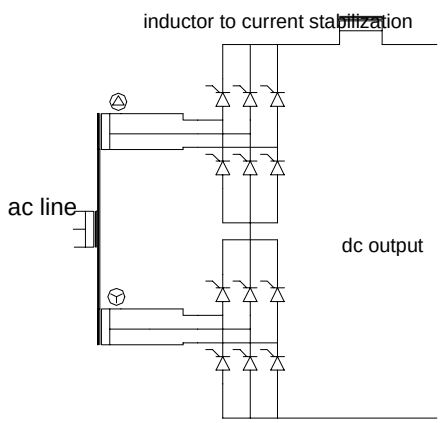

Fig 9 – Twelve Pulse Converter

3) Switched-mode power supply

This topology was proposed by a publication from the Lawrence Livermore National Laboratory of the University of California. This power supply employs pulse-width-modulation technology for arcing-loads. They typically operate from utility supplied three-phase voltage. This voltage is rectified and filtered, converted into an alternating square wave voltage with controlled frequency and pulse width, applied to a high frequency power transformer, rectified and filtered again. Figure 10 shows the simplified diagram of this power supply with current source characteristic. This converter is two or three times smaller than the conventional thyristor-controlled power supplies. This is because the high switching frequency results in small filter, capacitors, inductors and transformers. The energy efficiency is in excess of 90 % and comparable with the efficiency of conventional thyristor-controlled power supply. In addition, the input harmonics are dictated by the non-controlled rectifier resulting in a high value for the input power factor (≈ 0.95), higher than the thyristor-controlled power supply. This fact reduces the cost of the AC power distribution system and minimizes power supply interactions. It is important to note that this equipment uses four converters, degrading the system efficiency and reliability.

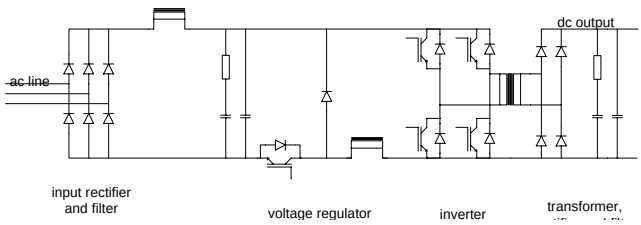

Fig 10 – Topology proposed by the Lawrence Livermore National Laboratory of the University of California

4) Full Controlled IGBT Bridge

The previous converter has succeeded in improving the low values of efficiency of the magnetic shunt system and the low power factor values of the thyristor rectifier. However its is too complicate and expensive due to the large number of energy conversion stages. In spite of the high power factor at the input of the diode bridge rectifier, some additional improvements in the harmonics contents can be achieved by the use of self-commutated rectifiers.

This paper is part of a project whose objective is the development of high performance converters for arcing loads. It proposes the use of the well-known three-phase, self-commutated, current source converter shown in figure 11. It uses only one conversion stage, requiring no specially designed transformer. Using pulse-width modulated (PWM) switches it is possible to obtain nearly sinusoidal currents at the AC side and to regulate the arc current. So, the harmonics can be reduced, depending basically on the switching frequency and the PWM

method. Also, the reactive power at fundamental frequency can be nullified. Fast acting DC current regulators are essential for arc stability, and can be easily achieved with this technique.

Among the many existing PWM strategies for current source converters [1,10,11,12], the one presented by Onishi [1] was chosen for the first version of the equipment. With some small change that will be explained in a coming paper, it can be easily implemented in low cost, commercially available microcontrollers.

Initial simulation results shows in figure 12 the AC side currents for a 100KW converter with the parameters listed below:

- AC side line voltage: 440V
- Transformer: . series reactance : 0.05pu, ($0.0968\,\Omega$)
  . Transf. Ratio: 1:1
- Filter capacitors (fig. 11): $83\,\mu F$;
- Switching frequency: 1260Hz (21*60Hz)
- DC side current: 206A
- Modulation index: 0.9

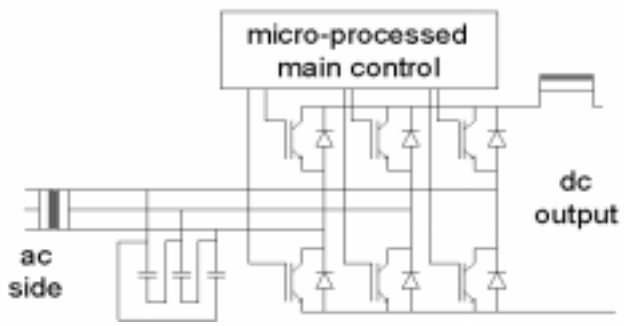

Fig. 11 – Self commutated, three-phase converter, (using IGBTs)

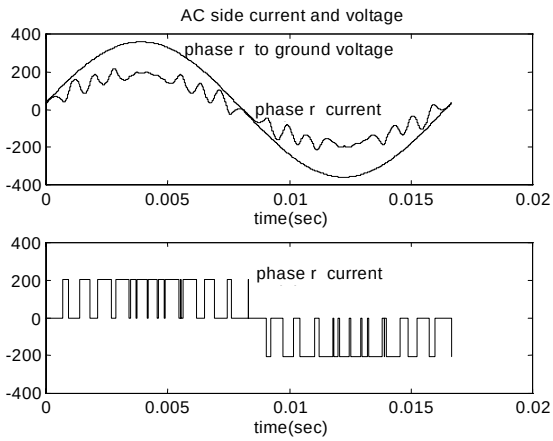

Fig. 12 – Simulation results for a self commutated rectifier: a1. primary line to ground voltage: a2. primary phase r current; b. secondary phase r current

IV. COMPARISON

In the plasma processes, the best use of the electric energy is directly related with the economic viability of the business. For example, if we consider a process that uses an effective power in the torch of plasma of 500 kW using a converter with efficiency of 90% and a filter system that consumes 5% of the total power, there is a non-productive energy of 61056 kW per month that represents an annual cost of approximately US$ 20.000,00. If that efficiency drops to 80%, that cost rises to US$ 37.700,00. If the power dissipated in filters and correction capacitor increases to 10%, the cost rises to US$ 28.000,00. With the last two conditions happening simultaneously, that cost would reach the value of US$ 46.500,00! As we can see in Fig.6, the efficiency of the magnetic shunt converter is strongly dependent of the output power. For example, a reduction of the power in the plasma torch imposed by the process (just as reduction of material demand), would elevate the cost of the produced material.

In the thyristor converter, the output power is adjusted through the variation of the firing angle of these thyristors, generated by the control circuit. With this control, the power factor decreases with the increase of the firing angle, or better, with the decrease of the output power. We know that the vendors of energy maintain expensive taxes for excessive consumption of reactive power, and to solve this problem, correction capacitors together with an automatic commutation circuit should be added to the converter. This will represent an additional investment cost and additional maintenance. In spite of the relatively low harmonics contents, the need for further reduction of the harmonic components still exists. This can be accomplished with the 12-pulse strategy converter. In this case, with a larger amount of components the converter is more expensive and the efficiency and reliability are reduced. We can do the same calculations of annual costs to verify the impact in the process cost.

The multi-stage system proposed in III.3 suggests a complicated and expensive converter due to the high number of power semiconductors (diodes and transistors) and reactive elements such as inductors and transformers. It still contains two active converters that demand a circuit of more complex control. Besides the cost of each conversion stage, we need to consider the efficiency of each one of them, that may have a great impact in the cost of the process.

The model proposed in III.4 intends to solve the main problems found in the previous converters, regarding the energy quality at the AC side and the efficiency of the converter, both directly affecting the cost of the process. The active elements are IGBT's to allow switching frequencies in the order of 1500 Hz, reducing the dimension of the reactive components such as inductors and capacitors. The control guarantees that the power factor is unitary, avoiding the use of the power factor correction capacitors. The high switching frequency guarantees the generation of higher frequency harmonics, reducing the size and cost of the AC side filter. The plasma process using this converter with only one conversion stage, small size filters and no additional reactive power correction equipment is expected to have improved efficiency, reducing the impact of harmonics and reactive power, reducing the equipment acquisition and operation costs.

V. CONCLUSIONS

After a brief introduction on the electric arc behavior and plasma torches, this paper focused on presenting and comparing four types of rectifiers suitable for arcing loads. The magnetic shunt based converter is simple and presents good power factor, but has a poor efficiency and it is not easily controlled. The thyristor-based rectifier has a good efficiency, is easy to control, but presents low power factor for operation under the rated power value, requiring additional compensation equipment. Also, harmonics must be reduced by expensive filters. A self-commutated rectifier proposed by the Lawrence Livermore National Laboratory of the University of California solves many of the previous problems using a complicated and expensive circuit.

It was shown that the three-phase, self-commutated, current source converter is a potential candidate to adequately solve the problems of the previous cases. The converter cost is expected to be higher than the previous ones. However the absence of additional equipment for the correction of harmonic and power factor capacitors is expected to reduce the system costs and efficiency.

This paper concentrated on the converter choice, showing only preliminary simulation results of the AC current. Further explanation on the PWM method, current control loops, and experimental results will be shown in a coming paper.

VI. REFERENCES

[1] Tokuo Ohnishi e Hiroshi Okitsu – A novel PWM technique for three phase inverter/converter – 1983 – IPEC – Tokyo.

[2] R.N.Szente, R.A.Schroeter, M.G.Garcia Jr and ºW.Bender – "Recovering Aluminium via Plasma Processing" JOM – pp. 52–55, Nov. 1997.

[3] R.N.Szente, R.A.Schroeter and M.G.Garcia Jr – "Treating Electroplating Residues with Thermal Plasmas", JOM – pp. 32-35 - Jul. 1998.

[4] Jerome Feinman – Plasma technology in metallurgical processing – chap.1,2,4 and 5 – 1987 – The Iron and Steel Society, Inc – U.S.A

[5] Merle N. Hirsh e H.J. Oskam – Gaseous Eletronics – chap.5 – 1978 – Academic Press – New York.

[6] J.M.Somerville – The Eletric Arc – chap. 1,2 and 3 - 1959 – Butler & Tanner Ltd – Great Britain.

[7] Robert F. Mayo, William L. Wells e Milton A. Wallio – A magnetically rotated eletric arc air heater employing a strong magnetic field and copper electrodes – 1963 – NASA technical note D-2032 – Washington, D.C. – U.S.A.

[8] Ned Mohan, Tore M. Undeland e William P. Robbins – Power eletronics – 1995 – John Wiley & Sons, Inc – New York – U.S.A.

[9] Lawrence Livermore National Laboratory of the University of California, "Switch mode power supply", paper obtained at the site "www.llnl.gov"

[10] Xiao Y. , et al. "A Novel Power Factor Control Scheme for High Power GTO Current Source Converter" Annual Meeting of the Industry Applications Society, IEEE, 1996, p. 865

[11] Holtz J. , et al. "High Power Pulsewidth Controled Current Source GTO Inverter for High Switching Frequency" Annual Meeting of the Industry Applications Society, IEEE, 1997, p.1330

[12]Sato Y. , Kataoka T. "An Inverstigation of PWM Pattern Generation Methods for High Power Current Type PWM Rectifiers", IPEC- Yokohama, 1995 p.748