3/1-phase converter for electrified railroad Base on New cascade active filters

Siamak Farshad
Siamakfarshad@yahoo.com

Zeng Guohong
ghzeng@tonghua.com.cn

Hao Rongtai
rthao@center.njtu.edu.cn

Northern Jiaotong University, Beijing 100044,China

Abstract: Large capacity electric railroads are a large single-phase reactive load that has a lot of harmonics and large magnitude negative and reactive currents. This paper describes a new 3/1-phase converter for electrified railroad based on new cascade active filters. The main object of this converter is compensation of harmonic; negative sequence and reactive currents of the electrified railroad supply systems.

1-Introduction:

Single-phase Supply system is widely used in the electrified railroads. It has advantages such as low cost, easy implementation and maintenance over three-phase and DC systems. The main disadvantage of the single-phase system is the large negative sequence current that produces by this single-phase subsystem of the three-phase power delivery system.

Power electronic converters that usually produce wide range of harmonics are used for traction effort and speed control in electric locomotives. Large capacity electric railroads are a large single-phase reactive load that has a lot of harmonics and large negative sequence current. This unbalance load produces serious problems on harmonics, reactive power and negative sequence current of the system. Passive filter and static Var compensator usually are used for compensation of harmonics and reactive power [7]. These counter measures have some disadvantages such as resonance phenomena and system dependency of the result.

Three-phase to two-phase transformer or phase rotation technique usually are used to compensate negative sequence current. These techniques have some disadvantages such as:

1-Negative sequence component will be zero only when the adjacent sections have same load that is almost impossible.

2-Two adjacent section are fed by different phase, so none energized line is needed between two adjacent sections, so a series of operation must be perform when train travel from one section to another one, that make some difficulty specially in high speed train.

Recently active filters are suggested for compensation of railway supply systems [1,2,3,4], a lot of active filters are realized in Japanese and Chinese electrified railroads. Large reactive, negative sequence current and high harmonics must be compensated in railway supply systems so usually a powerful active filter with high dc voltage and high switching frequency is needed, so the suggested active filters usually are very expensive. To overcome this problem usually parallel [1,2,3,4] or cascade active filters [5] are suggested. In the first method two or more active filters with same power and switching frequency are connected in parallel. In this case if the switching pulses of the converters have equal shift phase together, the total system will act as an active filter with power N. P_s and switching frequency of N.f_s , in which N, P_s and f_s are receptively number, power and switching frequency of each active filter [1,2,4]. But finally active filters need switching device with large power and high switching frequency. The other disadvantage of the parallel active filters is that control systems of all the units must work coordinately and any small difference in phase of switching frequency of one unit will decrease effect of parallel active filters. In second method, two cascade active filters with different power and switching frequency work in parallel. This two active filter work in different situation the first is used to compensate reactive and negative sequence current, because frequency of these currents is only 50 Hz (frequency of supply system) this active filter needn't high switching frequency so its power is high and the switching frequency is low. The second active filter is responsible for compensation of harmonics of the load and first active filter. This active filter has low current and high switching frequency. Although the current is low, the voltage of converter is high and a transformer is needed to decrease voltage of the system to practical value, but this transformer meets many difficulty because of the rich harmonic current of the system. The benefit of this system is that, two active filters can be controlled independently, only current of the first active filter senses by second one.

J.Hafner et al [6] introduce a hybrid active filter for linear balance load that compensated by TCR (Thyristor Controlled Reactor). He connects a parallel voltage source active filter to system through mid point of fifth harmonic passive filter, by this method, he reduced voltage of Active Filter.

There are passive filters with large power reactor and capacitor bank in Electrified railway substation those midpoint can be can be used for active filter that is in charge of harmonic compensation. Voltage of this point is

small so transformer and its difficulty can be omitted by excellent design.

2-Power circuit of the system

In this research a cascade active power filter (APF) is installed in substation and act as 3/1-phase converter that is fed by three-phase supply system and feeds single phase catenary of the electrified rail road. The active power filter and load can be a balance load without any harmonics, negative sequence and reactive current, because all substations are balance load, rotation of the load is not needed and all the sections can be fed by same phase. In this case insulation area between two adjacent section is not necessary only a small gab is needed to prevent circulating current between two substation. Fig. 1 shows configuration of electrified railway supply system.

Cascade active filter is including two independent active filters with different responsibility. Both active filters are parallel voltage source pulse width modulation (PWM) converter. Fig.2 show general configuration of these converters.

The first active filter compensates reactive and negative sequence current of the load. Negative sequence current has large magnitude in single-phase loads so this converter has large 50 Hz frequency currents but switching frequency is low (for example 450 Hz).Because of low switching frequency GTO can be used as switching devices in this converter. Because voltage of railway supply system is 25(27.5) kV, a star/delta transformer decreases voltage to practical value for active filter. This connection is chosen to decrease turn ratio (N_1/ N_2) and effect of unbalanced current on active flitter [1,2]. The second active filter compensates total harmonics of the load and first active filter currents. The main difficulty in this converter is high voltage of the system. Switching devices with high switching frequency usually have low voltage and power, in addition harmonics of the current make extra loss and difficulty in high power transformer.

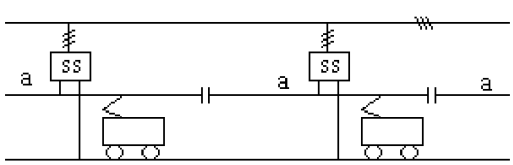

Fig. 1- configuration of electrified railway supply system

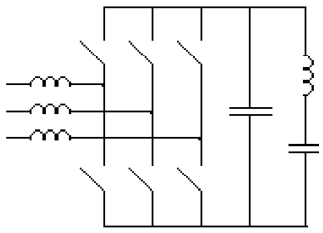
Fig.2-Voltage source PWM

In this paper, a hybrid system is suggested. Fig. 3 shows single line diagram of the proposed substation. Passive filter is tuned for lower order harmonic (or largest magnitude harmonics) of the load and first active filter, for example passive filter can be tuned for switching frequency of the first active filter. The Shunt active filter is clamped in parallel to the reactor of the passive filter. In this case, the fundamental voltage and rated power of the active filter will be reduced by the factor N^2–1 where N is the harmonic order of the tuned frequency [6]. In this case not only passive filter compensates some of the harmonics but also decrease terminal voltage of active filter, so power of second active filter considerably will decrease. This converter has small current with high frequency so this active filter simply can be realized by IGBT as switching devices. Because the voltage of the terminal of the second active filter is not very high with excellent design of the second active filter, transformer can be omitted.

3-Analysis of the load current

The most important key point in control of the active filter is accurate analyze of the load. There are many methods for analyze of the load [8,9,10]. Those are:

a) The instantaneous reactive power theory
b) The modified instantaneous reactive power theory
c) Synchronous reference frame method
d) Modified synchronous reference frame method

Marques [10] compared these methods and take result that "under none-sinusoidal and unbalance condition synchronous reference frame method has the best result. It drives sinusoidal and balanced currents on the source and is insensitive to voltage perturbations"

In this paper synchronous reference frame method is used to analyze the load current, in which the three phase load current is transform to i_d and i_q by (1).

$$\begin{bmatrix} i_d \\ i_q \end{bmatrix} = [T] \begin{bmatrix} i_a \\ i_b \\ i_c \end{bmatrix} \tag{1}$$

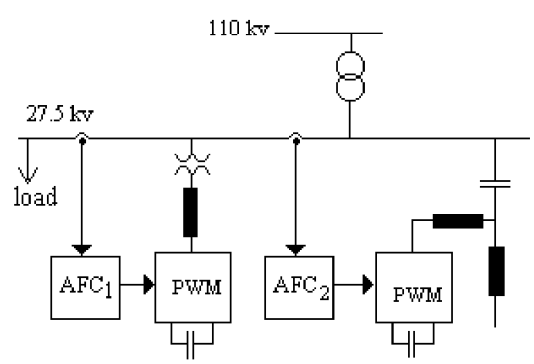

Fig.3- Single line diagram of the proposed substation.

In which i_a, i_b and i_c are the phase currents. [T] is transform matrix, if we choose voltage of phase a as reference, [T] will be as (2)

$$[T]=\frac{2}{3}\begin{bmatrix}\sin\omega t & \sin(\omega t-120) & \sin(\omega t+120)\\ \cos\omega t & \cos(\omega t-120) & \cos(\omega t+120)\end{bmatrix} \quad (2)$$

ω is constant and equal to the angular frequency of the supply system.

Because electrified railway load are single phase which fed by two phase of the supply system (for example a and b), i_a= -i_b=i_L and i_c=0. So, we have

$$\begin{bmatrix} i_d \\ i_q \end{bmatrix}=[T]\begin{bmatrix} i_L \\ -i_L \\ 0 \end{bmatrix} \quad (3)$$

We can analyze the i_d and i_q to some components that each of which introduces one component of currents in a,b,c system.

Table 1 shows relation between components of i_d and i_q and i_a, i_b and i_c [1,2].

It is difficult to calculate negative sequence current of the load by second harmonic of i_d and i_q so a new algorithm is used to calculate this current.

We describe i'_d and i'_q as components with negative base sequence, Negative sequence current can be calculated by analyzing of i'_d and i'_q. The i'_d and i'_q with negative base sequence can be calculated by (4) (i'_d and i'_q have not any physical meaning)

$$\begin{bmatrix} i'_d \\ i'_q \end{bmatrix}=[T']\begin{bmatrix} i_a \\ i_b \\ i_c \end{bmatrix} \quad (4)$$

Where [T′] will be as (5)

$$[T']=\frac{2}{3}\begin{bmatrix}\mathrm{Sin}\omega t & \mathrm{Sin}(\omega t+120) & \mathrm{Sin}(\omega t-120)\\ \mathrm{Cos}\omega t & \mathrm{Cos}(\omega t+120) & \mathrm{Cos}(\omega t-120)\end{bmatrix} \quad (5)$$

We can prove that same as i_d and i_q , the currents i'_d and i'_q have some components those each components can introduce one component of currents in a,b,c system.

Table 2 shows relation between components of i'_d and i'_q and i_a, i_b and i_c. So negative sequence current of the phases can be calculated by average value of i'_d and i'_q

4-Control system

Fig.3 shows location of current and voltage transducers. Two voltage transducers prepare sample of the line voltage for control system, These two samples are used to calculate phase and magnitude of phase voltages, these voltage are used to construct positive and negative reference frame and matrixes [T] and [T′]. Because Voltage of the supply system may have high order harmonics, FFT analysis is used to find fundamental frequency voltage of the phases. ω in (2) and (5) is the fundamental frequency of the supply system and is constant so we needn't measure frequency. One current transducer sends sample of single-phase load current to control system and two other one are used for sampling of the total load and first active filter current after compensation. Other two voltage transducers prepare sample of DC voltage of PWM converter. Negative sequence and reactive currents are used as reference current of the first active filter so, second row of table 1 and first row of table 2 are used to calculate reference current for this active filter.

$$\begin{bmatrix} i_a \\ i_b \\ i_c \end{bmatrix}_{ref}=[T]^{-1}\begin{bmatrix} 0 \\ i_{q=} \end{bmatrix}+[T']^{-1}\begin{bmatrix} i'_{d=} \\ i'_{q=} \end{bmatrix} \quad (6)$$

Total harmonics of the load and first active filter is used as reference current of the second active filter so fourth row of table 1 must be used to calculate reference current.

$$\begin{bmatrix} i_a \\ i_b \\ i_c \end{bmatrix}_{ref}=[T]^{-1}\begin{bmatrix} i_{d_{har}} \\ i_{q_{har}} \end{bmatrix} \quad (7)$$

Table 1- relation between components of i_d and i_q and i_a, i_b and i_c

Components of i_d and i_q	Components of i_a, i_b and i_c
DC component of i_d ($i_{d=}$)	Active current
DC component of i_q ($i_{q=}$)	Reactive current
Second harmonic	Negative sequence current
Higher harmonics	Harmonics

Table 2- relation between components of i'_d and i'_q and i_a, i_b and i_c

Components of i'_d and i'_q	Components of i_a, i_b and i_c
DC component	Negative sequence current
Second harmonic	Active and reactive current
Higher harmonics	Harmonics

It is difficult to separate this part from other parts. Because total current of the load and first active filter has not any reactive and negative sequence current, simply reference current of the second active filter can be calculated by (8)

$$\begin{bmatrix} i_a \\ i_b \\ i_c \end{bmatrix}_{ref} = \begin{bmatrix} i_a \\ i_b \\ i_c \end{bmatrix} - [T]^{-1} \begin{bmatrix} i_{d=} \\ i_{q=} \end{bmatrix} \qquad (8)$$

Triangular switching strategy is chosen for both active filters

Fig.4 show detail block diagram of each active filters.

5-Result

This new system is simulated by Saber software. A single phase 27.5 kv, 200kVA, controlled phase rectified load is compensated by this new system. The passive filter is tuned for fifth harmonic. Table 3 shows parameter of the system.

Fig. 5 shows result of simulation on proposed system. The compensated load is a single-phase rectified 200 kw load that fed by two phase of a three phase 27.5kv, 50Hz supply system through a three phase transformer. Simulation was done for different firing angle from zero to near 90°.

Figure 5-a and 5-b show three phases voltage and load current. Load is fed by phases a and b so $i_a = -i_b = i_L$ and $i_c = 0$.

Figure 5-c shows the harmonic spectrum of the load. This figure shows that load current is a rich harmonic current.

After compensation by first active filter, reactive and negative sequence current will be omitted from supply system current, but currents still has high order harmonics. In addition, first active filter can increase the harmonics of the system specially harmonics near to switching frequency and its multipliers, because of this we tune passive filter for seventh order harmonics. Fig5-d show phases currents after compensation by first active filter. Fig. 5-f shows harmonic spectrum of these currents. This figure shows that harmonics of the current increased because of switching frequency harmonics of first active filter.

At second step harmonics compensated by second active filter. fig 5-g and 5-h show supply system current and its harmonics spectrum after full compensation.

Active filter decreases negative sequence current of the system to 1. %, the magnitude of third and fifth order harmonics decreases to less than 1.2 % other low order harmonics are low too. Harmonics near to switching frequency and its multiplier are very small too (less than 1.2 %). So all the harmonics can satisfy all the limits those mentioned in standards [11]

Table 3-parameters of the system

Parameters	Prototype
Main voltage	27.5 kv
Load power	200kVA
Tuned frequency of Passive filter	450 Hz
switching frequency of first active filter	450 Hz
switching frequency of second active filter	2250 Hz

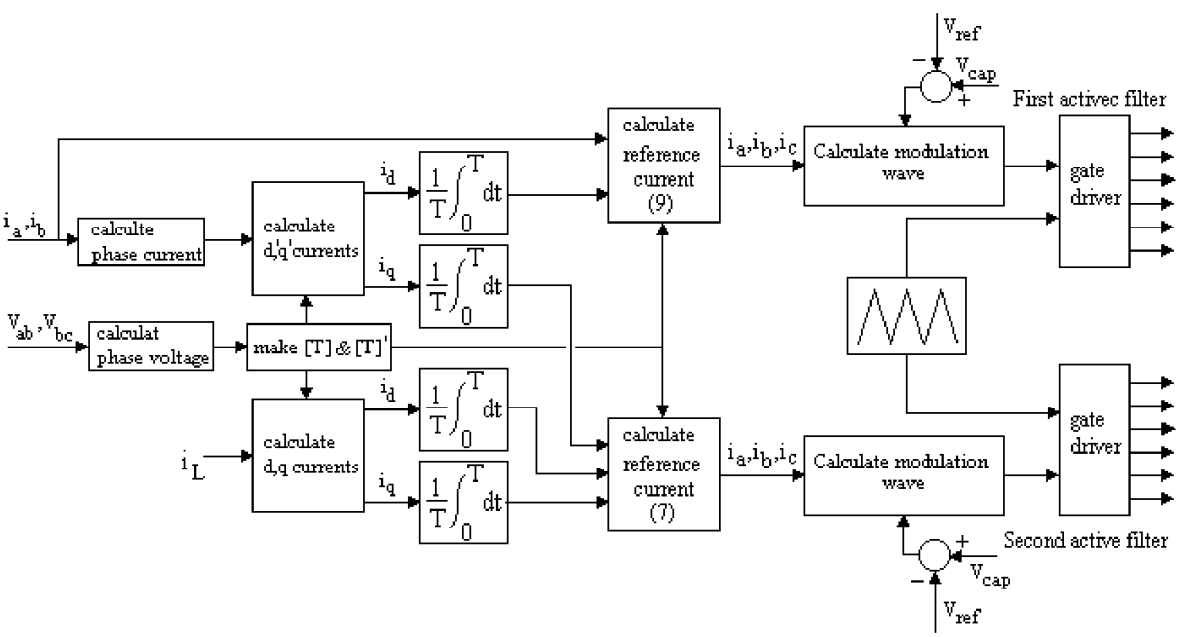

Fig.4- block diagram of cascade active filters.

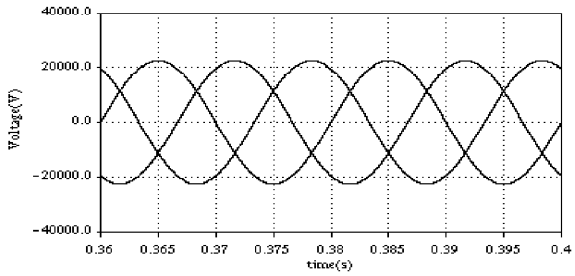

a) Source voltage

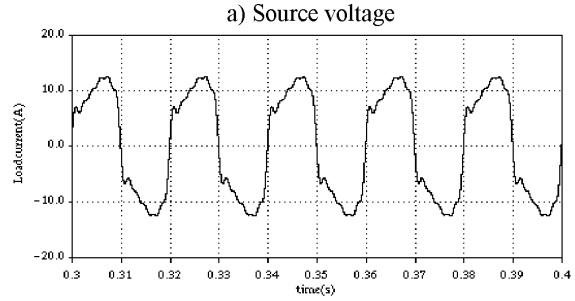

b) Load current

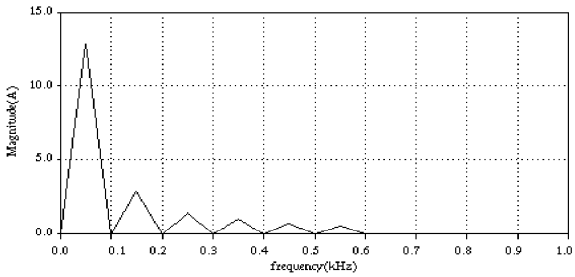

c) Harmonics of thc load currcnt

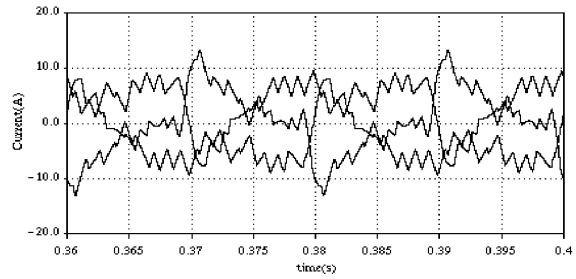

d) Total current of the load and first active filter

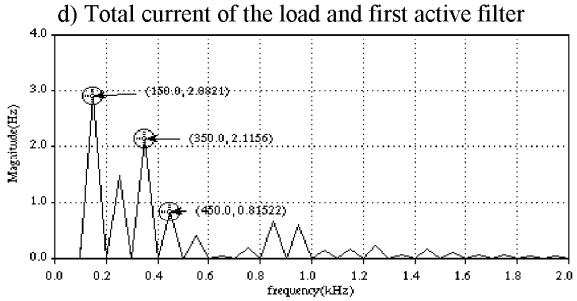

e) harmonics of the total current of the load and first active filter

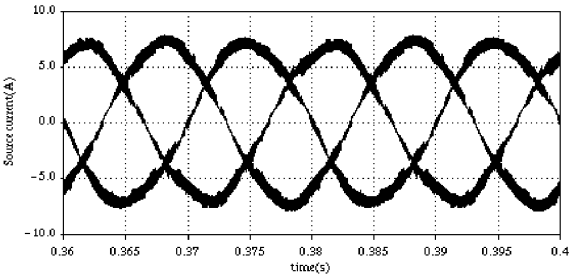

f) Source current after compensation

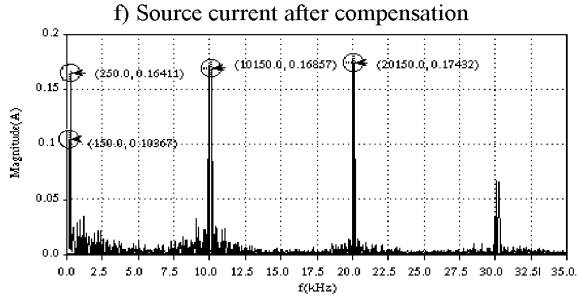

g) Harmonics of thc sourcc currcnt after compcnsation

a) Source voltage
b) Harmonics of the load current
c) Load current
d) Total current of the load and first active filter
e) harmonics of the total current of the load and first active filter
f) Source current after compensation
g) Harmonics of the source current after compensation

Fig.5-Effectof the New casecade active filter on System With single Phase rectified load

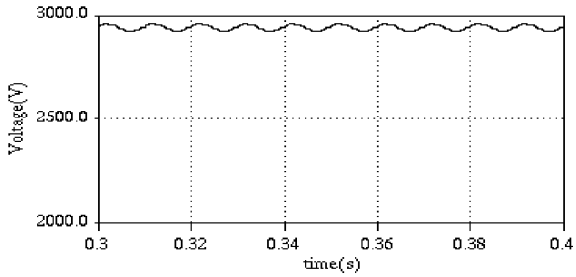

Fig.6- DC voltage of the first active filter

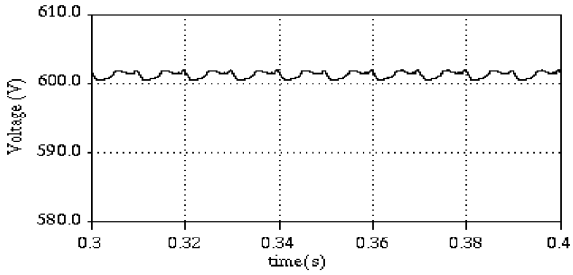

Fig.7- DC voltage of the second active filter

Control system successfully controls the DC voltage of the both converter figures 6 and 7 show the DC voltage of active filters.

Because voltage and power of the second active filter are enough small to realize by IGBT, transformer is omitted in this active filter so this system will not meet the difficulties those are related to application of transformer in high frequency currents. So, it seems this circuit successfully can compensate harmonics, negative sequence and reactive current of the load. Because the rated power of the second active filter is very small, the total cost of the active filter may be less than parallel active filters or other types of the cascade active filters.

6- References:

[1] S.Farshad, R.Hao, "Compensation of negative sequence, harmonics and reactive currents is electric rail road supply systems" The forth international on rail road transportation 1998, Tehran university, Tehran, Iran. (under press)

[2] S.Farshad, R.Hao, "Fundamental research of a novel 3/1 phase converter for electrified railroad" Journal of Northern Jiaotong university, Vol. 23, No 1 Feb 1999 pp 99-104

[3] S.Farshad, R.Hao, "Fundamental research of a novel 3/1 phase converter for electrified railroad" ICPE98 international conference on power electronic ,Seoul, Korea, 1998 , pp 955-960

[4] H.Akagai, "New trend in active filters for power conditioning" IEEE Trans. Industry applications VOL. 32 NO. 6 Nov. 1996 pp 1312-1322

[5] V.B.Bhavaraju,P.N.Enjeti,"Analysis and design of an active power filter for balancing unbalanced loads" IEEE Trans. power electronics. VOL8.No4 Oct. 1993 pp 640-647

[6] J.Hafner,M.Aredes, K.Heumann, "A shunt active filter applied to high voltage distribution lines" IEEE Trans. Power delivery , Vol.12, No.1, January 1997 pp266-272

[7] J.E.Miller, "Reactive power control in power systems". New York; Wiley, 1982

[8] J.V.Wu,H.L.Jou, "Simplified control method for the single-phase active power filter" IEE Proc.-Electr.power appl. , Vol. 143, No. 3,May 1996, pp 219-223

[9] Gonzalez, D.; Balcells, J.; Lovera, S.; Lima, R. "A Comparison between unity power factor and instantaneous power theory control strategies applied to a three phase active power filter" Proceedings of the 24th Annual Conference of the Industrial Electronics Society, 1998. IECON '98. IEEE vol.2 pp 843 – 847

[10] Marques, G.D. "A comparison of active power filter control methods in unbalanced and non-sinusoidal conditions" Proceedings of the 24th Annual Conference of the Industrial Electronics Society, 1998. IECON '98. IEEE vol.1 pp 444 – 449

[11] Thomas S. Key, Jih-Sheng Lai "IEEE and International Harmonic Standards Impact on Power Electronic Equipment Design" CD Proceeding of The sixteenth annual VPEC power electronic seminar Sep. 98, Virginia Tech