Power factor improvement of line-commutated graetz converters by increasing their number of pulses

Angelo J. J. Rezek; * José P. G.de Abreu; * Valberto F.da Silva; *
José M. E. Vicente; *José A. Cortez; * Wanderson de O. Assis; * Mauro S. Miskulin **

* EFEI / IEE /DET / DON
Cx.Postal 50 CEP:37500-000 Itajubá-MG
E-mail: rezek@iee.efei.br

** FEEC/ UNICAMP
Cx.Postal 6101 CEP:13081-970 Campinas-SP

ABSTRACT - The alternating current (AC) of line commutated converters is non-sinusoidal, generating, therefore, harmonics in the electric system.

Six-pulse graetz line-commutated converters are widely employed in industry. Twelve-pulse converter can be achieved by associating two six-pulse converters in series or in parallel. However it is necessary to use supply transformers. These transformers are connected in such a way that the secondary voltage phase angles are displaced thirty degrees in relation to each other. Lower order characteristic harmonics are eliminated in this case (5°, 7°), rendering these transformers as adequate for the proposed application.

A very good harmonic mitigation can be obtained when 24 or 48 - pulse multiconverters are employed, by associating four or eight graetz six - pulse converters, respectively. When the converter pulse number is increased there will be also, a system power factor improvement.

I - INTRODUCTION

Special transformers delta zig-zag (-15°, 0°, 15°, 30°) or star extended - delta ± (15°) should be used to obtain 15° displacement to achieve 24-pulse multiconverter. In the case of 48-pulse multiconverter, 7.5° displacement is needed and the special transformers mentioned should be designed to obtain the necessary secondary voltage angular displacement. A special autotransformer ADZ (7.5°) [10] can also be employed as shown in figure 9.

II - CONVERTER POWER FACTOR

The converter power factor is given by :

$$Pf = \left(\frac{I_1}{I}\right)\cos\phi_1 \qquad (1)$$

$$\delta = \alpha + \mu \qquad (2)$$

where:

Pf ⇒ Converter power factor
I_1 ⇒ Rms value of the fundamental phase current
I ⇒ Rms value of the phase current
ϕ_1 ⇒ Phase angle of the fundamental current I_1

Considering the commutation effect, we have:

$$tg\phi_1 = \frac{2\mu + \operatorname{sen} 2\alpha - \operatorname{sen} 2\delta}{\cos 2\alpha - \cos 2\delta} \qquad (3)$$

where:

ϕ_1 ⇒Phase angle of the fundamental current
μ ⇒Commutation angle in rad
α ⇒Firing angle
δ ⇒ Auxiliary angle

Neglecting the commutation effect the following relationship can be obtained:

$$\phi_1 = \alpha \qquad (4)$$

Also neglecting the commutation effect [8]

$$I_1 = \frac{\sqrt{6}}{\pi} I_d m \qquad (5)$$

where:

I_d ⇒ DC current side
m ⇒ Number of bridges connected in series

$$I_n = \frac{I_1}{n} \qquad (6)$$

I_n⇒ Rms value of the harmonic current, order n
n ⇒ Harmonic order

III - HARMONIC REDUCING BY THE COMMUTATION EFFECT

The commutation is a factor of harmonic reducing. The following expressions allow one to calculated the Harmonic Reduction Factor (HRF) [7].

$$H = \left[\frac{\text{sen}(n+1)\mu}{n+1} \right] \tag{7}$$

$$K = \left[\frac{\text{sen}(n-1)\mu}{n-1} \right] \tag{8}$$

$$\frac{I_n}{I_{n0}} = \frac{\sqrt{H^2 + K^2 - 2HK\cos(2\alpha + \mu)}}{(\cos\alpha - \cos\delta)} \tag{9}$$

Where:

I_{n0} - Rms value of the order n harmonic Current, for the commutation angle $\mu = 0°$.

The expression (9) is not valid for n=1, and according to [2].

$$H_1 = \cos 2\alpha - \cos 2\delta \tag{10}$$

$$K_1 = \text{sen}2\delta - \text{sen}2\alpha - 2\mu \tag{11}$$

$$\frac{I_1}{I_{10}} = \frac{\sqrt{H_1^{\,2} + K_1^{\,2}}}{4(\cos\alpha - \cos\delta)} \tag{12}$$

where:

$I_{10} \Rightarrow$ Rms value of the fundamental current for the commutation angle $\mu = 0°$.

Table 1 presents the Harmonic Reduction Factor (HRF), considering the expressions (9), (12) and also the results obtained through the use of a FFT program [5], for 256 samples. The twelve pulse converter has been considered for $\alpha = 0°$; $\mu = 15°$.

TABLE 1 - HRF for $\alpha = 0°$;$\mu = 15°$.

n Harmonic order	HRF FFT program	HRF Expres. (9) and (12)
1	0.9981	0.9980
11	0.7899	0.7899
13	0.7175	0.7174
23	0.3457	0.3453
25	0.2927	0.2922

IV - POWER FACTOR IMPROVEMENT BY THE CONVERTER PULSE NUMBER INCREASING

Neglecting the commutation effect, we have:

$$Pf = \left(\frac{I_1}{I} \right) \cos\alpha \tag{13}$$

According to expression (6) :

$$I = \sqrt{\sum_{n=1}^{\infty} \left(\frac{I_1}{n} \right)^2} \tag{14}$$

So, for six-pulse operation, one has:

$n = 6k \pm 1$ (1,5,7,11,13,...)

$$Pf_{6p} = 0.9550\cos\alpha \tag{15}$$

For twelve - pulse, the following result comes up:

$n = 12k \pm 1$ (1,11,13,23,25,...)

$$Pf_{12p} = 0.9901\cos\alpha \tag{16}$$

For twenty four - pulse, yields:

$n = 24k \pm 1$ (1,23,25,47,49,...)

$$Pf_{24p} = 0.9978\cos\alpha \tag{17}$$

For forty eight - pulse, results:

$n = 48k \pm 1$ (1,47,49,95,97,...)

$$Pf_{48p} = 0.9996\cos\alpha \tag{18}$$

V - 12-PULSE CONVERTER

A. Conventional 12-pulse converter.

Figure 1 shows the conventional 12-pulse converter, formed by bridges in series, supplied by star-star (0º) and star-delta (30º) transformers.

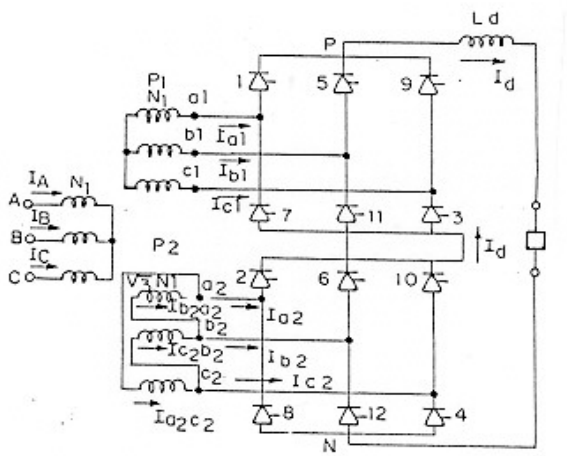

Figure1- Conventional 12-pulse converter

These converters are used in the majority of HVDC systems, as for instance in the ITAIPU (Brazil) - HVDC project.

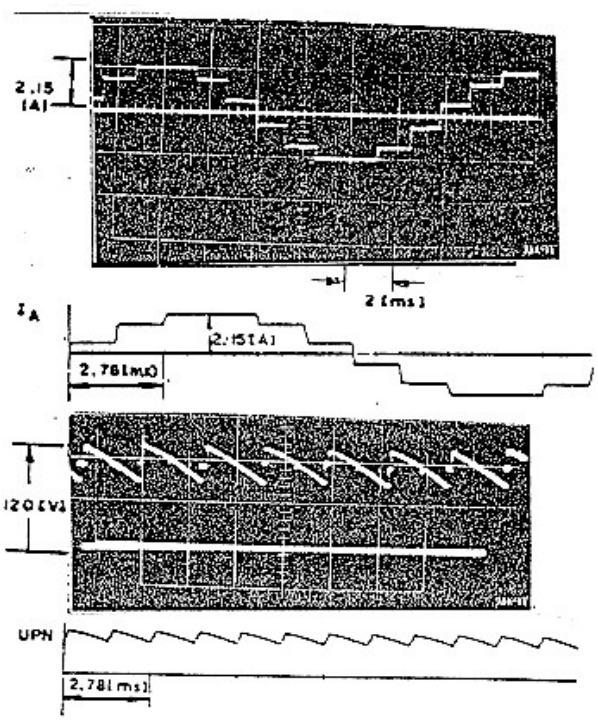

Figure 2-Experimental and simulated waveshapes of the supply current and the DC output voltage-conventional 12-pulse converter (α = 30º ; μ = 1,5º)

Figure 2 shows the experimental and simulated simulated waveforms of the supply current and the DC output voltage for firing and commutation angles, α = 30º and μ = 1,5º, respectively.

B. Optional 12-pulse converter.

Another 12-pulse operation can be obtained by using star-extended delta (± 15º) transformers. Figure 3 shows this type of transformer.

The taps enable to obtain transformer ratio 1:1 and ± 15º displacement in the secondary voltage are:

$$N_2 = 0{,}518N_1 \quad (19)$$

$$N_3 = 0{,}897N_1 \quad (20)$$

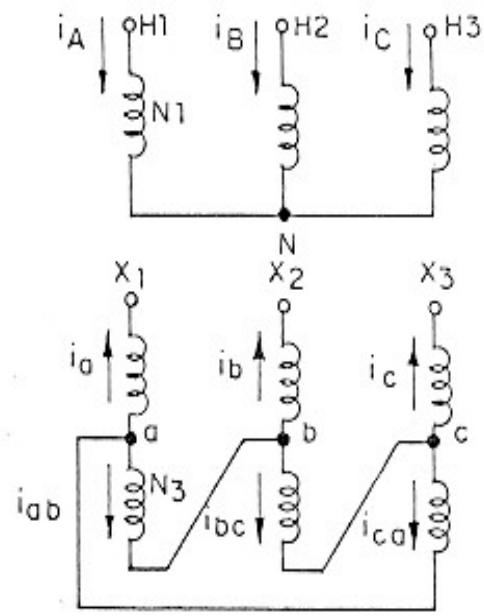

Figure3 - Star-extended delta transformer

Figure 4 shows the optional 12-pulse converter.

Figure 5 shows the experimental and simulated waveforms of the supply current and the DC output voltage, for firing and commuta- tion angles α = 30º; μ = 1,5º, respectively.

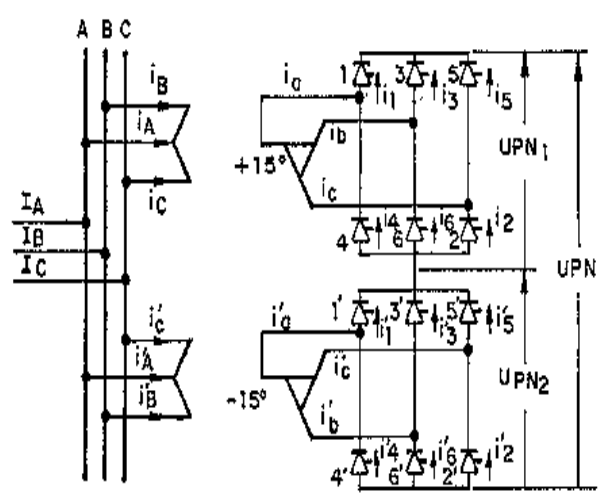

Figure 4 – Optional 12-pulse converter

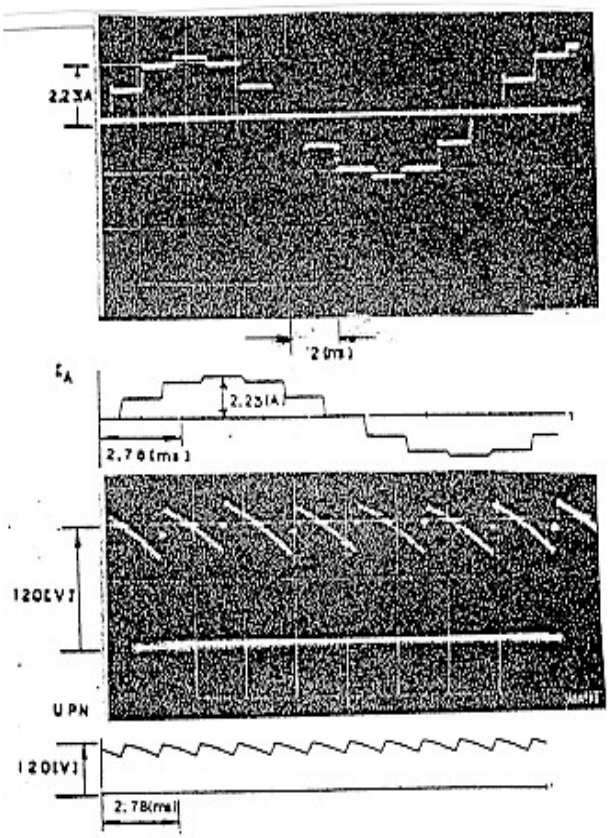

Figure 5 - Experimental and simulated waveshapes of the supply Current and the DC output voltage- optional 12-pulse converter (α = 30º; μ = 1,5º)

VI - 24 - PULSE CONVERTER

A. 24-Pulse converter using delta zig-zag *transformer.*

Figure 6 shows the delta/zig-zag transformer.

The taps N_2 and N_3 needed to obtain the angular displacements -15º; 0º; 15º; 30º , are shown in Table 2.

Table 2 - Taps N_2 and N_3
A.D → Angular displacement

A.D	TAP N_2	TAP N_3
-15º	141,42 %	51,76 %
0º	100 %	100 %
15º	51,76 %	141,42 %
30º	0 %	173,21 %

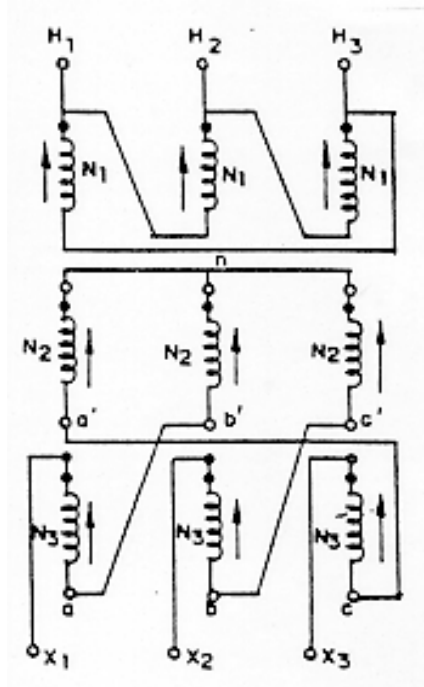

Figure 6 - Delta/zig-zag transformer

B. 24-Pulse converter using star-star (0º); star delta (30º); star-extended delta ± 15º supply transformers.

This 24-pulse system can be obtained by associating conventional (figure 1) and optional (figure 4) 12 pulse converters. The necessary 15º secondary voltage displacement is also achieved.

C. Experimental and simulated results

Figure 7 shows the 24-pulse converter arrangement.

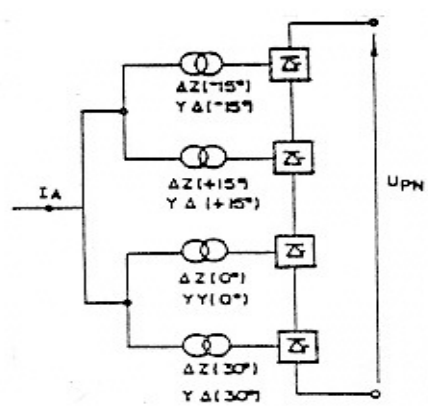

Figure 7 - 24 - pulse converter arrangement.

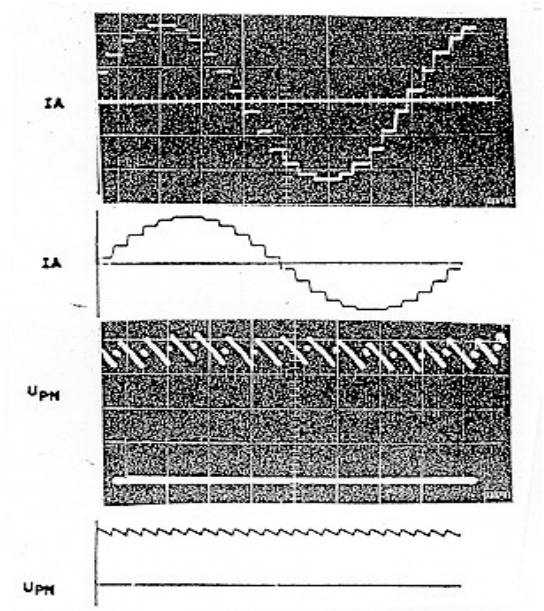

Figure 8 - Experimental and simulated waveshapes of the supply current (I_A) and the DC output-voltage (UPN)- 24- pulse converter ($\alpha = 30^o$; $\mu = 1,5^o$)

Figure 8 shows qualitative experimental and simulated waveforms of the supply current (I_A) and DC output voltage (UPN), for firing and commutation angles, $\alpha = 30^o$ and $\mu = 1,5^o$, respectively.

VII - EXPERIMENTAL AC CURRENT OF THE FOURTY EIGHT - PULSE MULTICONVERTER

Figure 9 shows the 48 – pulse multiconverter (series configuration).

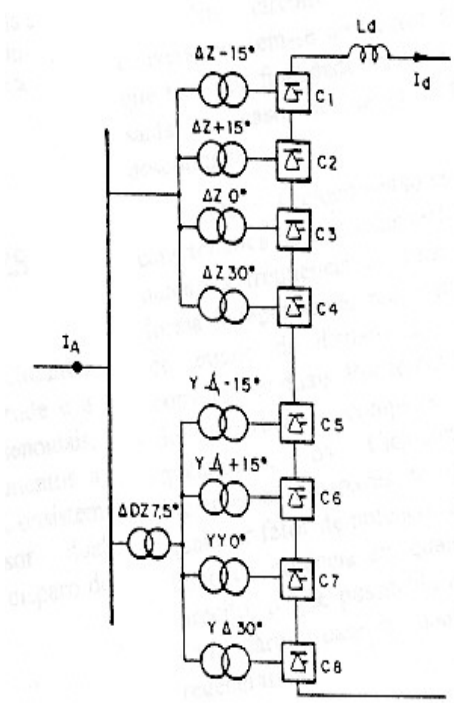

Figure 9 - 48-pulse multiconverter (series configuration)

The ADZ shown in figure 9 is a phase shifter auto-transformer (7.5º) [10].

Figure 10 shows the AC current I_a and the phase voltage U_{an} for $\alpha = 0°$; $\mu = 4°$.

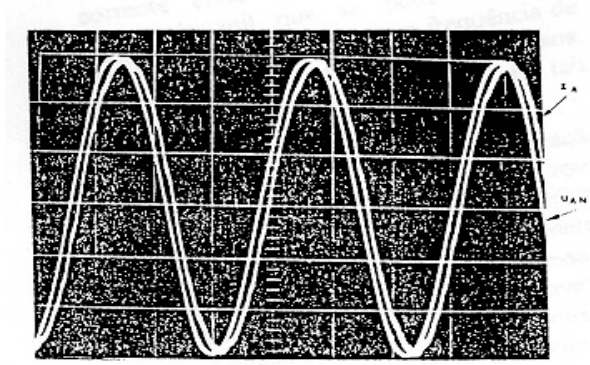

Figure 10 - AC current I_a and the phase voltage U_{an} of the 48-pulse multiconverter ($\alpha = 0°$; $\mu = 4°$)

VIII - CONCLUSION

There is a converter power factor improvement when the converter pulse number is increased, because the Harmonic Distortion Factor, I_1/I, decreases. The FFT program used [5], has presented a good accuracy, as shown in Table1.

Extended - delta transformer is a good option to be employed in twelve - pulse converter, because the units are identical and only a phase sequence reversal in one of them is sufficient to obtain ± 15° angular displacement.

By associating the conventional 12 - pulse converter, with the optional 12 - pulse converter, a 24 - pulse multiconverter is achieved. This arrangement should be considered to use in industrial systems and also in HVDC transmission, because there will be in this case a saving in filters installation.

The commutation is only responsible for harmonic attenuation, but not for harmonic elimination. There is in fact a harmonic distortion factor reduction, but the converter power factor decreases, because the phase angle ϕ_1 of the fundamental current increases (see expression 1).

The main advantage of using the ADZ (figure 9) to obtain 7,5° displacement enable to implement the 48 - pulse multiconverter is that it is an auto-transformer, being so a low cost equipment.

Prototypes of 6-12-24-48 pulse converters have been built and tested at our laboratories and experimental results match with simulated ones.

IX - REFERENCES

[1]A.J.J.Rezek, “Modelling and implementation of multiconverter systems”, (In Portuguese), DS_c Thesis, FEE/UNICAMP, may, 1991.

[2]A.J.J.Rezek, “Permanent and transient condition analysis of an AC/DC electric conversion system” (In Portuguese), $M.S_c$ Thesis, EFEI, june, 1986.

[3]L.Carlsson. “Extended-delta converter transformer for 12 - pulse operation in HVDC projects”, *International HVDC Seminar*, Rio de Janeiro, Brasil, 1986.

[4]J.P.G.Abreu; A.J.J.Rezek; A.Candido, “Modelling and implementation of 48-pulse multiconverter”, *Proceedings IEEE-ICHPS*, Bologna, Italy, pp 50-54, september ,1994.

[5]J.C.G.Siqueira; G.H.F.Floriano, “Harmonic spectrum of a periodic function by using the Fast Fourrier Transform” (In portuguese), EFEI/CPq/DET, Itajubá, Brasil, 1987.

[6]A.J.J.Rezek; J.P.G.Abreu; V.F.Silva; M.S.Miskulin, “New alternatives for HVDC transmission” (In Portuguese), *Cigré, VI ERLAC*, Foz do Iguaçu, PR, Brasil, may, 1995.

[7]E.Ulmann, “Power transmission by direct current”, *Springer-Verlag*, Berlin, Heidelberg, New York, 1975.

[8]E.W.Kimbark, “Direct current transmission”, Vol I, *Wiley Intercience*, New York, 1971.

[9]A.J.J.Rezek; J.P.G.Abreu; V.F.Silva; M.S.Miskulin, “Increasing the converter pulse number: Harmonic contents and power factor improvement” (In Portuguese), *Cigré, VII ERLAC*, Puerto Iguazú, Argentina, may, 1997.

[10]J.P.G.Abreu; A.J.J.Rezek; V.F.Silva; L.E.B.Silva; M.S.Miskulin, “Harmonics elimination in multiconverter systems by using a special autotransformer (ADZ)” *Proceedings AMSE Modelling, Simulation & Control*, AMSE Press, vol. 38, n° 4, pp 45-53, France, 1992.

[11]A.J.J.Rezek; M.S.Miskulin; J.P.G.Abreu “Computer aided design applied in power electronics” (In Portuguese), *Proceedings II Power Electronics Seminar*, pp. 102-109, UFSC, Florianopolis, SC, Brasil,1989.

[12]A.J.J.Rezek; J.P.G.Abreu; V.F.Silva; M.S.Miskulin, “Converters for application in HVDC systems”, *International Conference on Contribution of Cognition to Modeling, AMSE*, july 6-8, Lyon-Villeurbanne, France, 1998.