A Soft Switched Current Controlled Three Phase Inverter for Induction Machine Driving

D. A. Andrade; R. M. Finzi Neto; L. C. Freitas, J. B. Vieira Jr.; V. J. Farias
Department of Electrical Engineering
University of Uberlândia - Brazil
Uberlândia – MG – 38400-192

***Abstract*: The paper proposes a current controlled inverter operating in ZVS mode for an induction machine drive. Operation with no voltage stress in the DC link bus is achieved. Together with the soft switching operation, a fixed frequency Bang Bang current control technique is also implemented allowing for an accurate shaping of sinusoidal currents to feed the motor. As a result, a ripple free torque profile in steady state operation is reached. With the soft switching technique it is possible to operate conventional IGBTs at 40 kHz.**

A detailed analysis of the circuit operation is presented. The feasibility of the proposed scheme is experimentally verified on a prototype.

I. INTRODUCTION

The evolution of variable frequency AC drives has grown enormously in the last few years. For rotating field AC machines, a requirement for good torque profile and dynamic control is the presence of sinusoidal currents in the stator windings. This is the reason for the great effort made along the years by the research community, in order to develop switching strategies which reduces the harmonic contents of the voltages and currents in a machine drive. It is well known that the increase of switching frequency is a good way to improve sinusoidal shape of ac load current and voltage waveforms driven by static converters. This however pays the price of increased losses in the semiconductors as well as is a source of EMI with its undesirable consequences [1,2]. A recent trend in ac machines drive systems is the use of soft switching strategies. It allows for the reduction of semiconductor switching losses, for the increase of switching frequency of typical static devices used in power ac machines drive systems such as IGBTs, and the reduction of EMI, making easier the implementation of the respective control systems.

This paper presents a proposal of a soft-switched current controlled inverter, able to impose a quite good sinusoidal current waveform to an induction machine. We present the converter topology, principle of operation and simulation results obtained from the SABER© simulator. Experimental results are presented to confirm theoretical analysis.

II. CONVERTER TOPOLOGY:

Figure 1 shows the complete converter topology. It comprises a full bridge three phases IGBT inverter, which is fed through a DC notching circuit. The resonant DC link utilizes a DC Voltage Notching Circuit similar as that presented in [4].

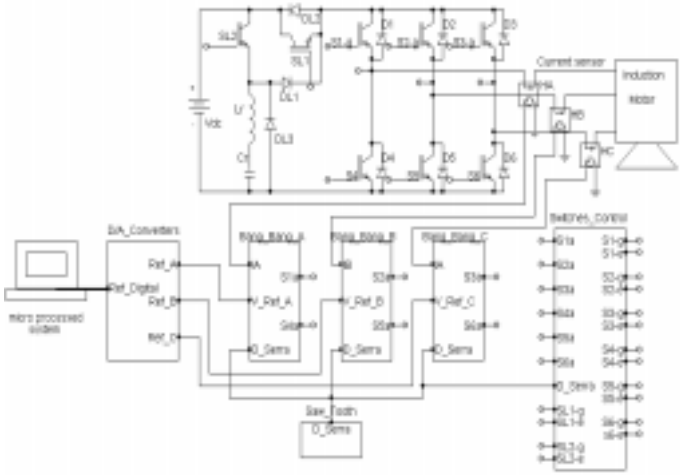

Fig. 1 -- Converter topology.

The DC Voltage Notching Circuit allows for the DC Link voltage of any polyphase inverter to be brought to zero on command to facilitate ZVS of the inverter switches. In the process, the input DC voltage is disconnected, providing the voltage zero switching conditions for the inverter switches. This scheme of Parallel Resonant DC Link (PRDCL) is suitable for PWM inverters, since the DC link can be brought to zero on command [4]. Some advantages of this topology can be outlined.

- The DC Notching Circuit can be activated on command. This allows for different PWM strategies to be used on the inverter.
- The switches of the notching circuit are switched at either zero current and or zero voltage, providing lossless operation. This makes the use of IGBTs very suitable when the switches operate in a ZCS way.

A. *Operating modes of the DC voltage notching circuit:*

The DC voltage notching circuit and the inverter's representation, for one switching cycle, (Im), are shown in Fig. 2. For each resonant cycle of the notching circuit, the inverter input current, Im, can be considered constant. The operation of the voltage notching circuit can be divided into seven stages. The stages of operation and respective configuration can be seen in Fig. 3. The equations development can be found in [5].

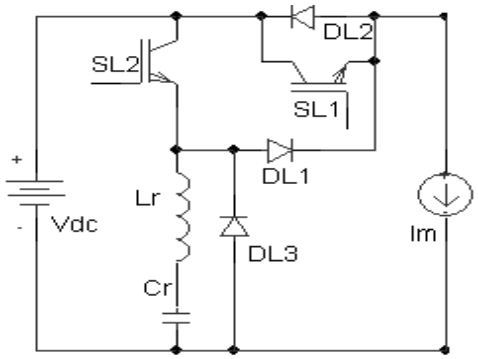

Fig. 2. DC Voltage Notching Circuit.

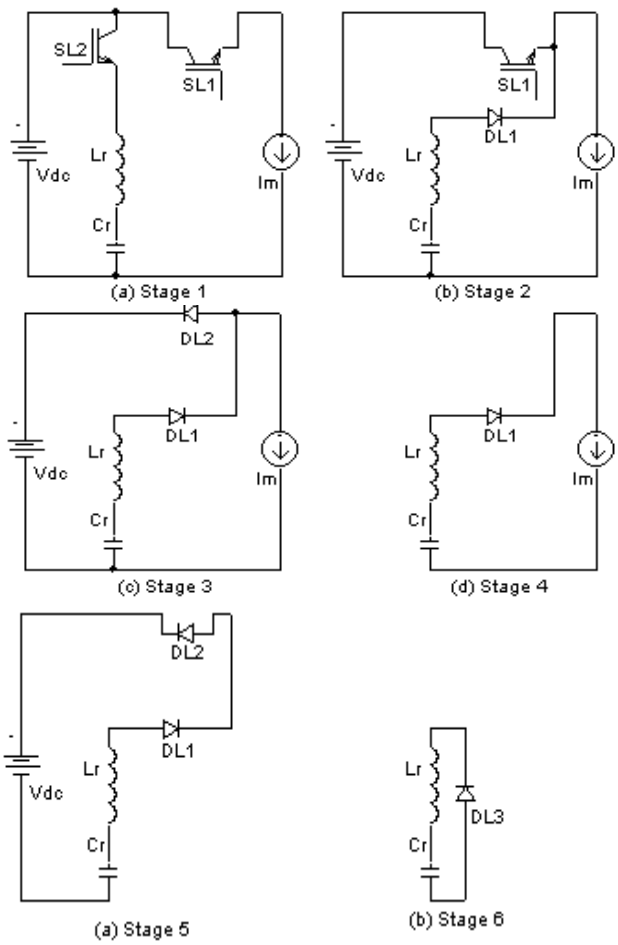

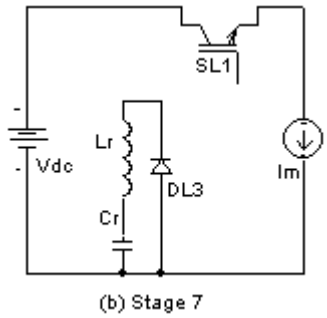

Fig. 3 -- Operating stages.

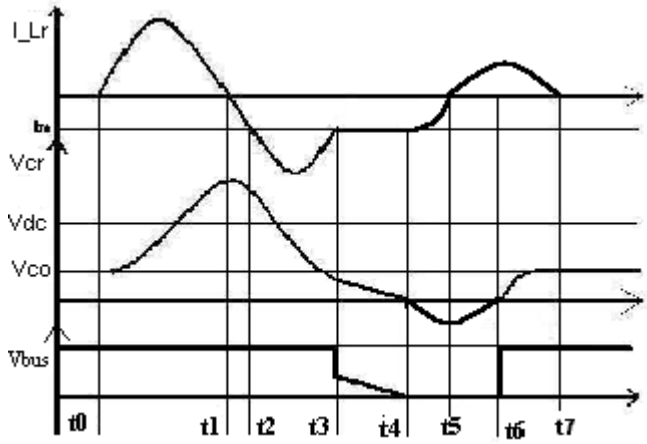

Fig. 4 - Capacitor current and voltage wave forms.

For all the stages, the resonant frequency is defined as:

$$\omega_0 = \frac{1}{\sqrt{L_r\, C_r}} \tag{1}$$

<u>Stage 1</u> [$t_0 - t_1$] => At t = t_0, SL2 is turned on. SL1 continues to conduct the load current Im and the resonant current pulse flows through the LC branch charging the resonant capacitor Cr. This stage ends when $i_{Cr}(t)$ falls to zero. The current on the LC branch and the voltage across the capacitor are given by :

$$i_{LC}(t) = (V_{DC} - V_{C0}) \sqrt{\frac{C_r}{L_r}}\, sin\,(\omega_0\, t) \tag{2}$$

$$v_c(t) = V_{DC}\,(1 - \cos(\omega_0\, t)) + V_{C0}\, \cos(\omega_0\, t) \tag{3}$$

where V_{C0} is the initial voltage across the capacitor C_r.

The peak voltage and current in Cr can be found from (3) and (2) :

$$V_{C\,max} = 2\, V_{DC} - V_{C0} \tag{4}$$

$$I_{peak} = (V_{DC} - Vc_o) \cdot \sqrt{\frac{C_r}{L_r}} \tag{5}$$

Stage 2 **[t_1 – t_2]** => When the capacitor current, $i_{Cr}(t)$, falls to zero SL2 can be turned off in a ZCS way. At this point the capacitor current reverses its direction and flows through diode DL1.

The current through SL1 decreases as $i_{Cr}(t)$ increases through DL1. When $i_{Cr}(t)$= Im, SL1 can be turned off in a ZCS way. I_{pico} must be bigger than I_m to get ZCS in SL1.

SL1 can only be turned off in a ZCS way if the gate pulse of SL1 is brought to zero before $i_{Cr}(t)$ gets smaller than Im.

The current on the LC branch and the voltage across the capacitor are given by :

$$i_c(t) = -(V_{DC} - V_{C0}) \cdot \sqrt{\frac{C_r}{L_r}}\, sin(\omega_0\, t) \tag{6}$$

$$v_c(t) = V_{DC}(1 + \cos(\omega_0\, t) - V_{C0} \cos(\omega_0\, t) \tag{7}$$

Stage 3 **[t_2 – t_3]** => The remaining current flows through diode DL2 back to the source. This stage ends when $i_{Cr}(t)$ = *Im* again in t = t_3. The capacitor current and voltage equations are the same of stage 2. The voltage across Cr in the end of this stage is Vc_{t2}.

Stage 4 **[t_3 – t_4]** => As the inverter input current is considered constant during the resonant cycle, the resonant capacitor continues to discharge in a constant current mode. The voltage across the capacitor can be seen on the DC Bus at this point, because the diode DL1 is directly polarized . DL3 can not conduct due to the positive voltage on Cr.

The current on the LC branch and the voltage across the capacitor are given by :

$$i_c(t) = -I_m \tag{8}$$

$$v_c(t) = -\frac{I_m}{C_r} \cdot t + V_{Ct\,2} \tag{9}$$

Stage 5 **[t_4 – t_5]** When the voltage across the resonant capacitor goes to zero, the voltage on the DC Bus falls to zero either and the inverter switches are turned off in a ZVS way. Diode DL2 starts conducting together with DL1. During the time, part of the resonant current is returned back to the source.

This stage ends when $i_{Cr}(t)$ starts to get positive again and DL2 stops conducting.

The current on the LC branch and the voltage across the capacitor are given by :

$$i_c(t) = -I_m \cos(\omega_0\, t) \tag{10}$$

$$v_c(t) = -I_m \sqrt{\frac{L_r}{C_r}}\, sin(\omega_0\, t) \tag{11}$$

Stage 6 **[t_5 – t_6]** => Diode DL3 starts conducting the resonant capacitor current $i_{Cr}(t)$. The capacitor voltage starts to increase to a positive V_{Co} if no inverter switch is conducting.

SL1 must be turned on at t = t_6 to avoid a possible discharge of Cr, but will get into conduction in a hard switching way. This is the only time that soft switching is not obtained.

The current on the LC branch and the voltage across the capacitor are given by :

$$i_c(t) = V_{Co} \sqrt{\frac{C_r}{L_r}}\, sin(\omega_0\, t) \tag{12}$$

$$v_c(t) = -V_{Co} \cos(\omega_0\, t) \tag{11}$$

Stage 7 **[t_6 – t_7]** => SL1 is turned on at t = t_6. At this point, the source feeds the inverter again. The resonant current continues to charge Cr to initial voltage Vc_o. The capacitor current and voltage equations are the same of stage 6. This stage ends when SL2 is turned on again and one more resonant cycle begins

Some considerations about the switching of SL1 and SL2 must be outlined.

- SL1 switches in a ZCT way and it is turned off in a ZVS way too. Vdc is maintained on the LC branch till t = t_3. Since SL2 is turned off in t = t_1, SL2 operates in a ZVS way too.
- SL1 is turned off in ZCS way and in a ZVS way too. Because the same reason of SL2.

III. CONTROL STRATEGY *:*

The strategy used for the inverter current control is the PWM bang-bang current control [3]. That strategy uses a saw tooth waveform, added to a reference signal, to perform the switching with variable duty cycle. The added reference is compared to the load current of an inverter leg. Through of these comparisons the inverter switches are turned on and off. Fig. 5 shows that.

The last block set performs the timing between the notching circuit and the inverter switches.

With the same saw tooth added to the all η references all the inverter switches can be turned off in a ZVS way and the DC voltage notching circuit needs to be activated only once to perform the operation..

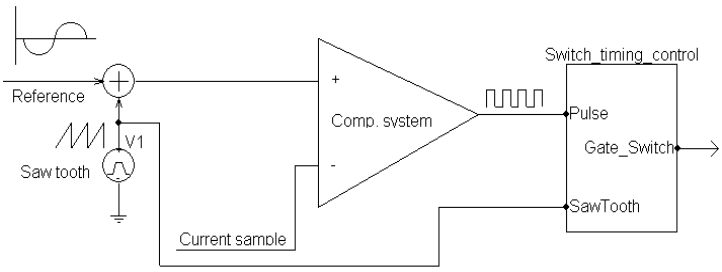

Fig. 5 - The bang-bang hysteresis current controller implemented

Fig. 6 shows the Bang-Bang Current Controller scheme for one phase.

The signals 'Upper_Switch' and 'Lower_Switch' are applied to the notching circuit controller, which controls the gate pulses of the inverter switches and the gate pulses of the notching circuit. When the notching circuit controller identify a negative edge from the Bang-Bang Current Controller, it starts decreasing the DC Bus voltage and holds up the inverter gate pulses until the DC Bus voltage is zero.

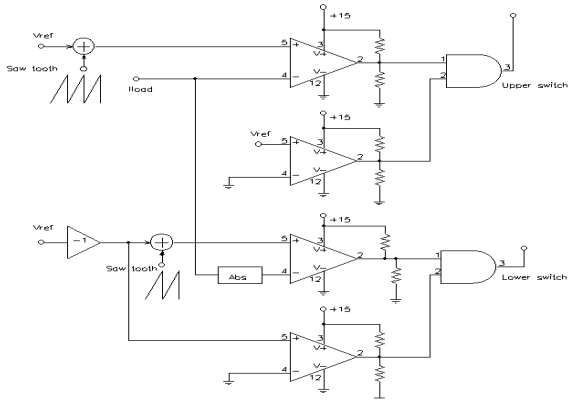

Fig. 7 - Bang-Bang current controller for one phase.

The notching circuit controller uses 2 timers to monitor the turn off of its own switches (SL1 and SL2).

The inverter switches are allowed to turn off by one timer of the controller.

IV. DIGITAL SIMULATION

In order to study the system operation, digital simulation was carried out. Simulation program was implemented using the SABER (TM) simulator. The induction machine is represented by the three axis (ABC) model. The switches employed in the DC voltage notching circuit were IGBTs (IRGBC30U, for SL1, and IGBC20U, for SL2) and the inverter switches are IRGBC20U, the resonant components values used were Lr = 6 μH and Cr = 30 nF. The inverter switches switching frequency is 40 kHz. The load is 2.2 kW three phase induction motor.

Fig. 8 shows the current through the resonant elements and the voltage across the capacitor. Fig. 9 shows the switching detail of SL1. It's observed that the switching turn off occurs in a ZCS and ZVS way. Fig. 10 shows the switching detail of SL2. It's observed that the switching occurs in a ZCT way and it turned off in a ZVS way too. Fig. 11 shows the switching detail of an inverter switch. It's observed that the switching turn off occurs in a ZVS way. All the inverter switches operate in this way. Fig. 12 shows the three phase imposed load current waveform.

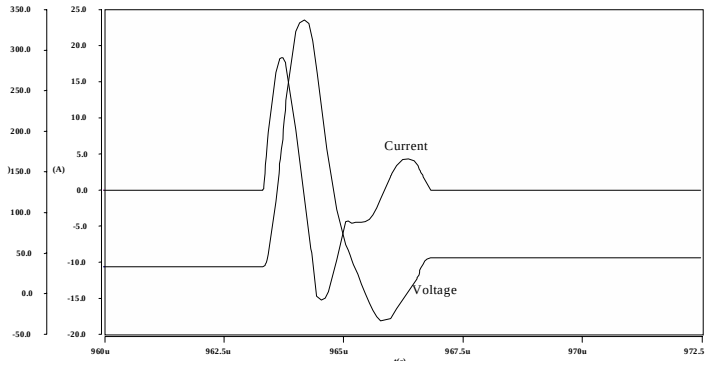

Fig. 8 – Current and voltage across the resonant capacitor.

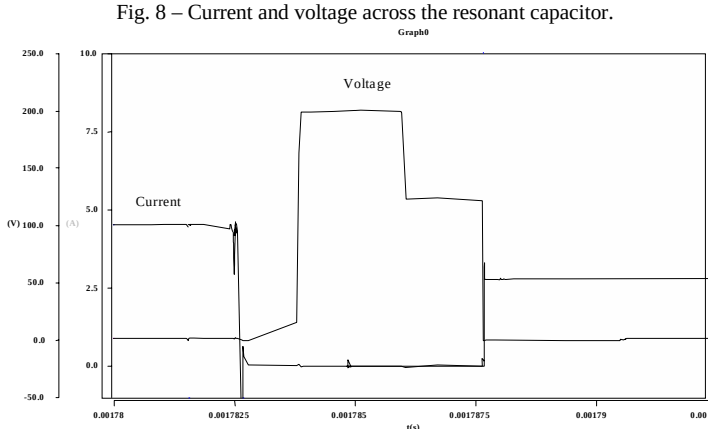

Fig. 9- Switching detail of SL1.

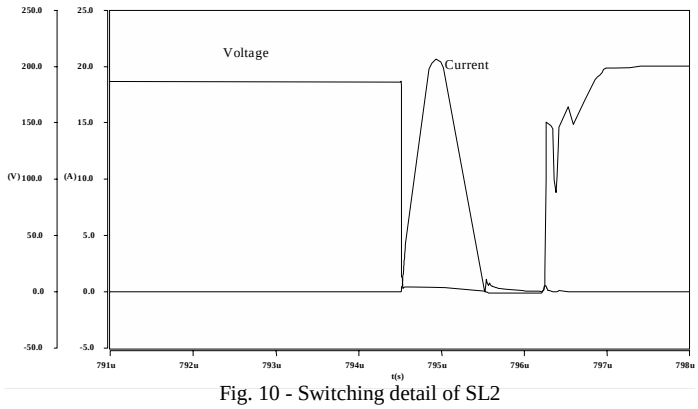

Fig. 10 - Switching detail of SL2

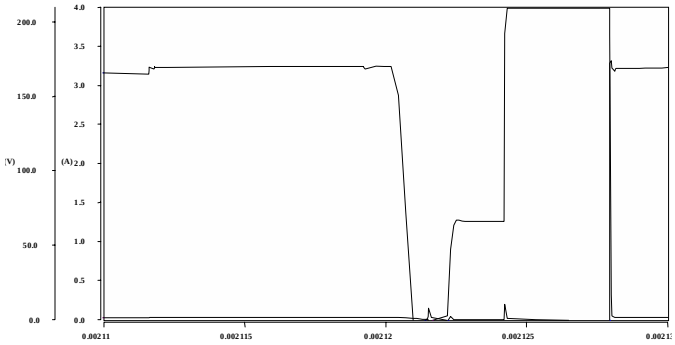

Fig. 11 - Switching detail of an inverter switch

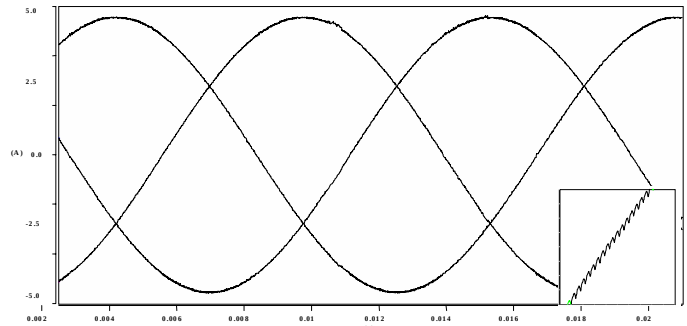

Fig. 12 - The imposed three phase induction motor currents.

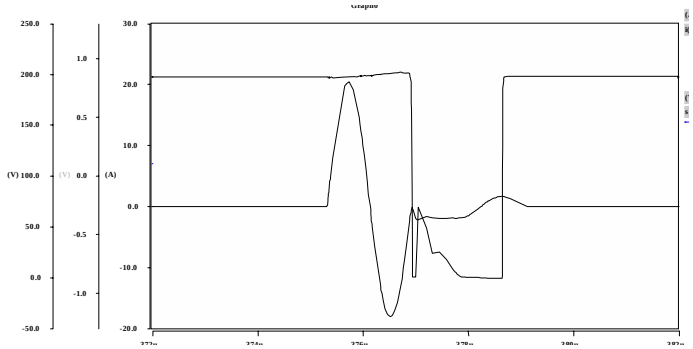

Fig. 13 - Voltage BUS in the DC link.

Figure 13 shows the voltage waveform in the DC link. It can be seen that there is no voltage stress. The harmonic spectrum is presented in figure 14. The THD is 2.2 %.

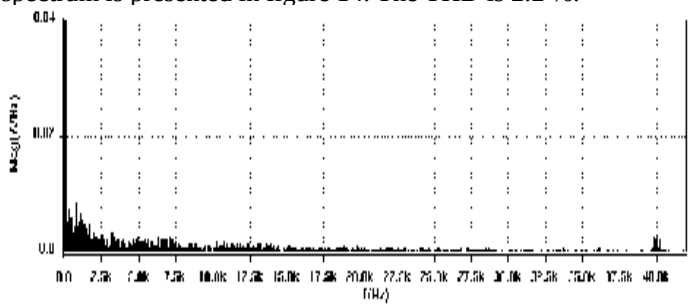

Fig. 14 - Simulated harmonic spectrum of the imposed current.

V. EXPERIMENTAL RESULTS :

The same parameters used on the simulation were used to build the prototype. A 2.2 kW three phase induction motor was used as load and a 200 DC voltage was applied to the bus .

Figure 15 shows the current through the resonant elements and the voltage across the capacitor. Figure 18 shows the switching detail of SL1. Figure 17 shows the switching detail of SL2. Figure 18 shows the switching detail of an inverter switch. Fig. 19 shows the three phase imposed load current waveform. Figure 20 shows the bus voltage. Figure 21 shows the harmonic spectrum of a phase current. The THD is 2.62 %.

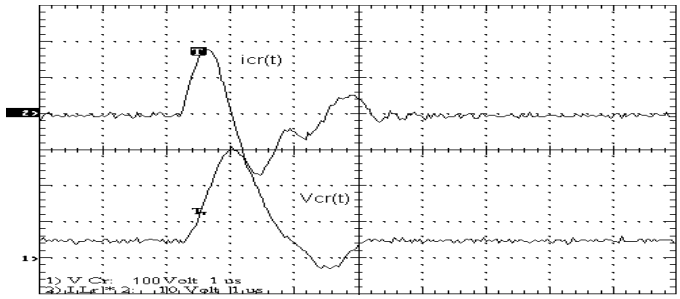

Fig. 15 — Current through the resonant elements [$i_{Cr}(t)$], voltage across the capacitor [Vcr]

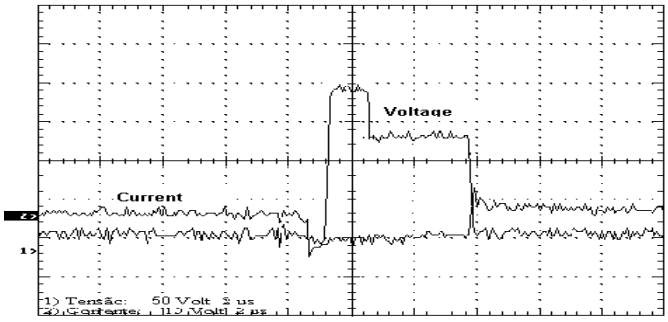

Fig. 16 — Switching detail of SL1.

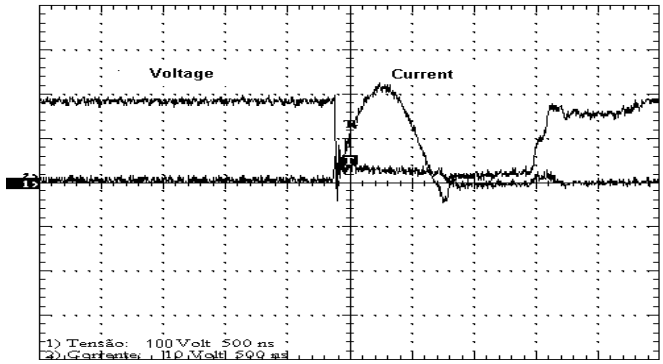

Fig. 17 - Switching detail of SL2

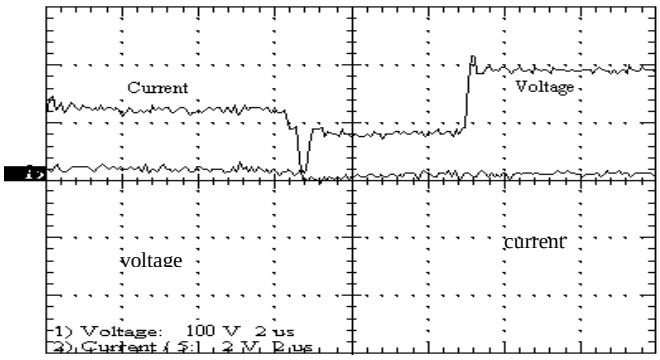

Fig. 18 - Switching detail of an inverter switch: current (anode) and voltage across it.

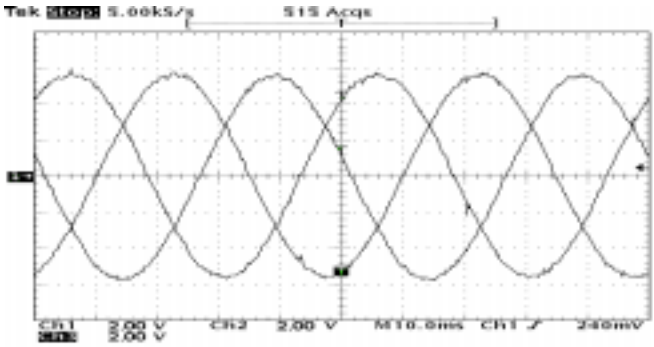

Fig. 19 - The imposed three phase induction motor currents .

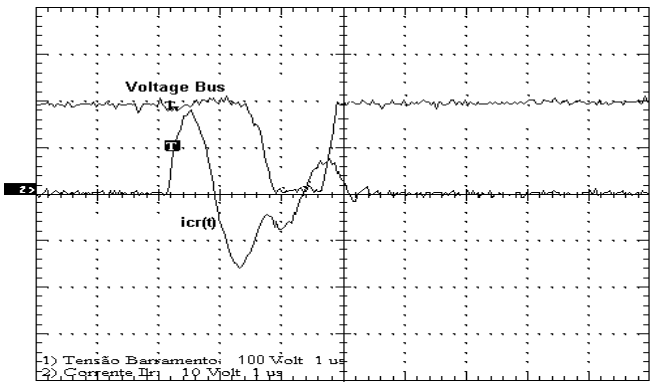

Fig. 20 - Voltage BUS in the DC link and resonant current.

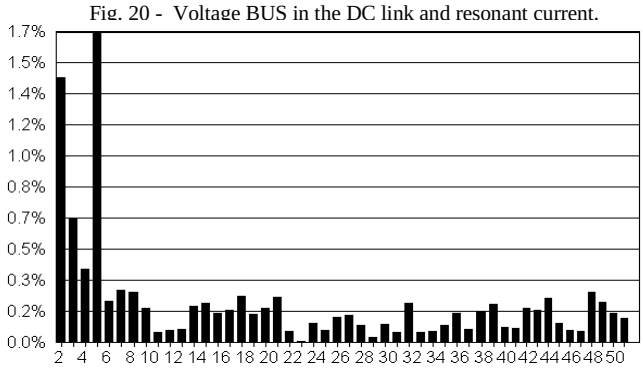

Fig. 21 - Experimental harmonic spectrum of the imposed current

I. CONCLUSIONS:

This paper shows the study of the behavior of a soft switched bang-bang current controlled three phase inverter. The main purpose is to develop a strategy of current control for ac machines drives which allows for the achievement of the closest sinusoidal current waveform. Contributions of the work can be listed as the use of the technique of bang-bang current control strategy for the three phase inverter, leading to a reduction in the resonant DC link frequency switching in order to obtain ZVS operation in the inverter switches, the development of a simulation program using the SABER simulator, the use of IGBTs at 40 kHz .

Switch SL1 generates conduction power losses of approximately 1% of the total power delivered to the electrical machine.

Some problems, due to PCB layout of the prototype, limited the maximum bus voltage. Better PCB layouts can solve this kind of problem.

REFERENCES:

[1] S. Chen, T.A. Lipo "*A novel soft switched PWM inverter for AC motor drives*" IEEE Trans. on Power Electronics, vol 11, n. 4, July 1996

[2] V.V Deshpande, S.R. *Doradla "A new topology for parallel resonant DC link with reduced peak voltage*" Proceedings of the APEC'94 – pp. 260-266

[3] R. Toffano Jr. at ally "*A self resonant PWM boost converter with unit power factor operation by using a bang bang current control with fixed switching frequency"*. Proceedings of the APEC'97 – pp. 4.454 - 4.457

[4] Andrade D. A. , Finzi Neto, R. M. "*A study of a soft switched Bang-Bang current controlled inverter*"- Proceedings of the APEC 99 – Dallas – Texas. March/1999.

[5] Finzi Neto, Roberto Mendes, "*Desenvolvimento de um Inversor Trifásico Utilizando as Técnicas de Chaveamento Suave e Imposição de Corrente para Acionamento do Motor de Indução.*" Tese de mestrado, março de 1999. Programa de Pós Graduação em Eng. Elétrica - UFU.