An Experimental Test on Factory to Determine Efficiency at Rated Load of 12 Pulses High Current Controlled Rectifiers

Ricardo Fuentes Fuentealba
Universidad Técnica Federico Santa María
P.O.Box 110 V─Valparaíso─Chile
IEEE Senior Member
e-mail: rifuente@eli.utfsm.cl

Iván Saavedra Dote
Universidad Técnica Federico Santa María
P.O.Box 110 V─Valparaíso─Chile
e-mail: ivan@saavedra.com

***Abstract* – In this paper an experimental test to get efficiency at rated current and rated voltage of 12 pulses high current rectifier is presented.This 12 pulses configuration is formed by two 6 pulses high power rectifier in paralled. Normally the electric power capability of the factory is small in comparison with the rated power of this type of rectifiers. The proposed method means to connect both 6 pulses rectifier in antiparalled in such way that one of them operates as a rectifier and the other as an inverted. This way the active power required from the network is just only the total losses. The reactive power for this test must be supplied by a capacitor bank or by the network (or both).**

I. Introduction

Electrowinning copper plant requires enormous power rectifiers electronically controlled by means of thyristors. These equipments are the main part of the plant. The rectifier have to be a controlled current source in order to assure the quality of cathods. So, sophisticated electronic control cirucuits are required. Also, rectifiers have to have a good dynamic response in front of eventual short circuits of the cells during the crops of cathodes.

It is said that the controlled rectifier is the heart of the process. There is no question about the importance of the reliability and consequently, the design should have good safety margins. From energy consumption point of view, the controlled rectifier demands around of 80% of the total power of the electrowinning plant. This way, an exact evaluation of efficiency is very important. As a result of technical evaluations of real plants, it can be assure that a difference of the order of 3% between the calculated efficiency and the real measured efficiency means economic differences that are higher than controlled rectifier cost, considering 15 years of economic life of the plant.

Does it arise the medullary question: What is the true value of the transformer-rectifier efficiency for normal operation conditions? and how to get it at the factory or before installing it in an industrial plant? .

In order to get losses of the controlled rectifiers many parameters converge with more or less incidence, but the main difficulty of a reliable measurement is associated to the non lineal character of the currents and to the high power of the equipment, always higher than the power of the electric networks of the factories. It is necesary to get losses at rated current, but at rated voltage as well.

Power rectifiers for electrowinning processes normally are manufactured in modules of 6 pulses or in groups that are connected in parallel. The levels of continuous current are very characteristic. For big units they do not usually surpass the 20.000 controlled DC A each. The reasons are focused to harmonics mitigation by means of groups of shifting transformers, continuity and security of service and design limitations .

This paper present a method to measure transformer-rectifier losses, based on the characteristic of having 2 rectifiers of 6 pulses in parallel (very common in big plants). This method consist on connect them in antiparallel so that one operates as a rectifier and the other one as a inverter. The test can be done at rated current and rated voltage, being for it necessary an active power equivalent only to the losses to be measured and a reactive power that have to be evaluated for each specific case.

II. The concept of the test:

Fig.1 shows an outline for the normal operation of a typical electrowinning copper plant, as an example, 20.000 A DC, 62 V DC which corresponds to a copper production of around 35 tons/day of cathodes. It is indicated the transformers configuration and design parameters and typical variables for an operation at full load.

Fig. 2 shows the proposed test concept, considering rated load, that is to say, rated current and rated voltage.

Next it is indicated the most important parameters in the typical electric diagram of the Fig. 1 and Fig. 2.

Transformer 1:

Power	:1.640 kVA
Phases	: 3
Frequency	: 50 Hz
Configuration	: ANSI 45
Primary voltage	:4.160V
Second. voltage	:60Vphase/104 V LL

Transformer 2:

Power	:1.640 kVA
Phases	: 3
Frequency	: 50 Hz
Configuration	: ANSI 46
Primary voltage	: 4160 V
Secondary voltage	: 60Vphase /104 V LL

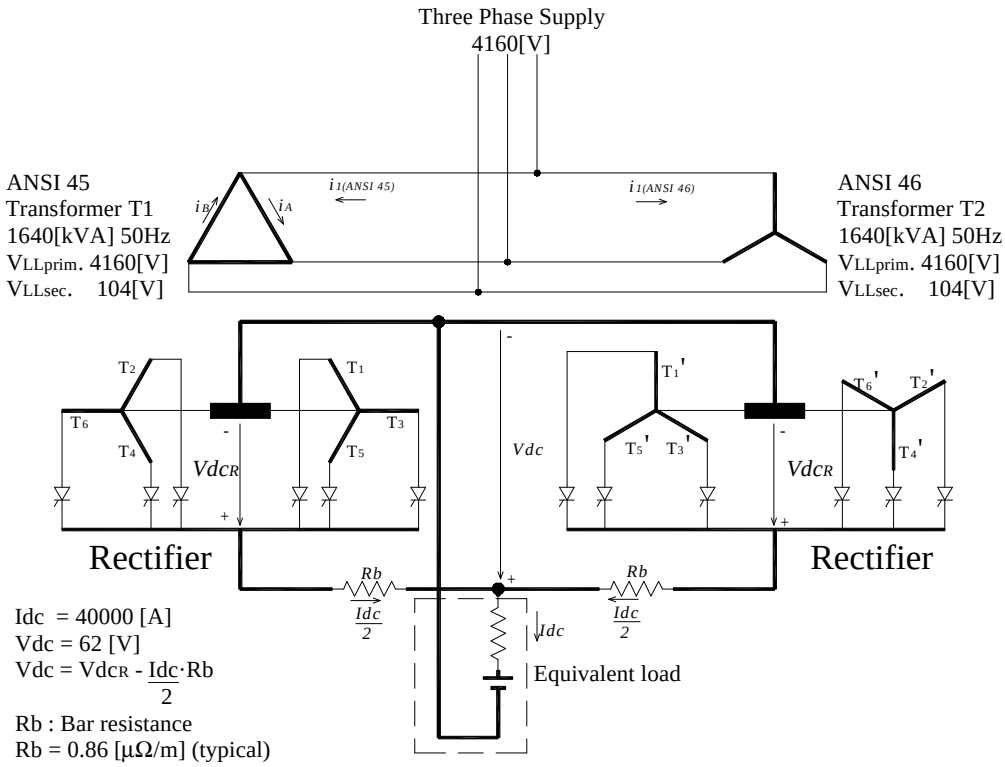

Fig. 1: 12 Pulses ANSI 45/46 Configuration. Normal Operation

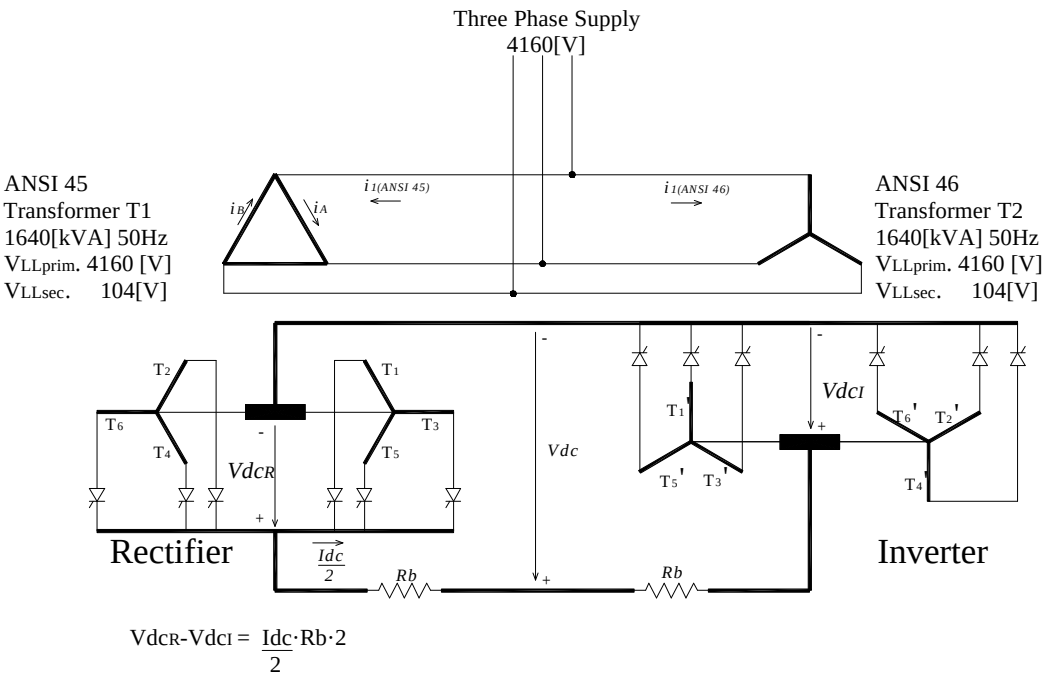

Fig. 2: 12 Pulses Configuration (in Antiparallel). Proposed Test.

Thyristors: POWEREX TGA20
Copper bars:

Current density	: 1 A/mm2
Resistivity	: 0.0172 Ω mm^2 / m
Bar resistance /m	: 0.86 $\mu\Omega$/m (20000 DC A)
Voltage drop /m	: 17.2 mV/m

TEST VALIDATION:

In order to validate the proposed test it is neccesary to review the operation condition of a real plant shown in Fig. 1 and the operation condition of the equipment under test at the factory shown in Fig. 2. The different losses must be analyzed considering the current and voltage waveshapes for both situations.

The following hypothesis are given in order to validate the test.

Hypothesis 1:
It can be accepted that if the applied voltage from the AC lines is sinusoidal and if the AC lines and primary transformer voltage drop due to current harmonics is negligible with respect to the line voltage, iron losses of transformers are quite similar to the iron losses obtained by the conventional no load transformer test. Under this condition the magnetic flux in transformer still remaing sinusoidal. Iron losses depend on magnetic flux and frequency.

Hypothesis 2:
The copper losses P_{cu} depend on the value and waveshape of current. If the voltage drop in DC bar between rectifier and inverter is negligible (typical value: 17.2 mV/m for 20kA rated DC current, 1A/mm^2), it can be assume that the thyristor trigger angle of the rectifier and inverter will be supplementaries ($\alpha_{rectifier} + \alpha_{inverter} = 180^o$). Secondary voltage of transformers are quite similar because of design of 12 pulses configuration. This way, it can be concluded that for the proposed test the primary and secondary current in the rectifier and the inverter are also quite similar with respect to the real operation of equipment (same trigger angle α or balanced condition, same waveshape). Under normal operation conditions, it is considered that in 12 pulses configuration formed by two 6 pulses configuration in parallel DC current is balanced.
Transformer copper losses obtained from conventional short circuit test are completely different because in this test the current is sinusoidal.

Hypothesis 3:
With respect to losses in semiconductors P_{sem} ,bars P_{bars}, fuses, etc the same argument of Hypothesis 2 can be considered , because the current waveshapes of rectifier and inverter will be the same as in the case of both rectifier in parallel.
If current waveshape are similar, it can be considered that circulating current between rectifier and inverter (in antiparallel) will be the same as in the case of both rectifier in parallel (same trigger angle α).

Acording to the above hypothesis, the total copper losses of each 6 pulses unit is one half of the total copper losses obtained by the proposed test (both 6 pulses units are identical and currents are the same). The difference of the total copper losses obtained by the proposed test and conventional short circuit test gives the aditional losses, that corresponds to the harmonics effects. It is not possible to meassure this aditional losses in factory by conventional or routine test.

It is very important to know what the actual losses of a power controlled rectifier are, because of economical evaluation of electrowinning plant. The value of kWh/Copper·kg production depends on losses.

III. HARMONICS MITIGATION:

In the Hypothesis 1 it is said that AC line and primary transformer voltage drop due to harmonics must be negligible in comparison with the line voltage.

Under normal operation of a 2 controlled 6 pulses rectifier in parallel, current harmonics of order 5 and 7 are cancelled in AC lines. However , in the test configuration shown in Fig. 2 the harmonic of order 5 in rectifier and inverter are in phase. The same situation is valid for harmonic of order 7. If the voltage primary drop is not negligible the proposed test will be not valid. This ideas are ilustrated in Fig. 3 and Fig. 4

IV. ABOUT EXPERIMENTAL TESTS ON LABORATORY:

In order to check the proposed test on laboratory a 12 pulses Ansi 23-25 configuration was used. This configuration is also very used in electrowinning copper plants. There are no qualitative differences with respect Ansi 45-46 excepting losses on interphase reactor (Ansi 45-46). The transformers of experimental prototype at laboratory were 15 kVA (not oil immersed). Fig. 5 shows this connection. Measurements to determine transformers losses according to routine proceeding, transformer-rectifier power at the input , transformer-inverter power at the output and DC power on the DC bar between rectifier and inverter were made. This measurements were repeated for different values of DC current with and without a capacitor bank to mitigate the reactive power. Finally, a registration of current harmonic was made for different load degrees.

V. RESULTS

TOTAL LOSSES

Fig. 6 shows the relationship between the net input power (total losses) and the power transferred between the rectifier and the inverter. It is observed that

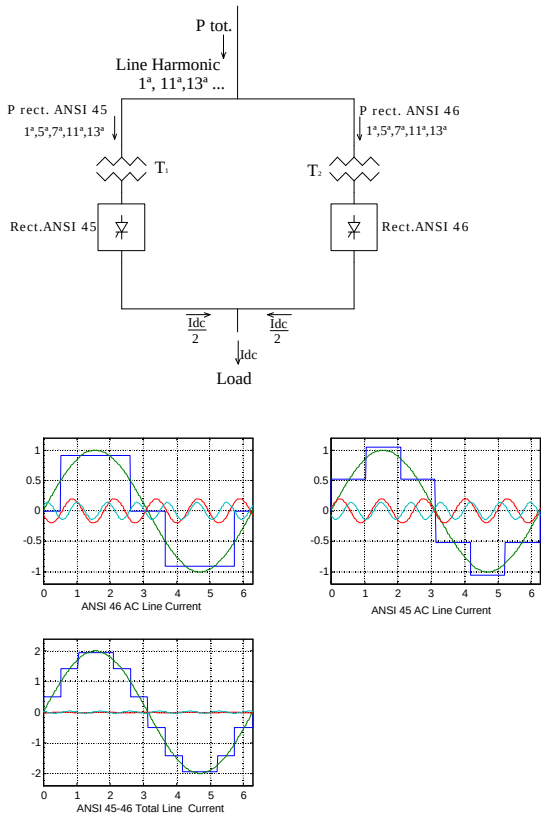

Fig. 3.AC Line Harmonics in Real Configuration.

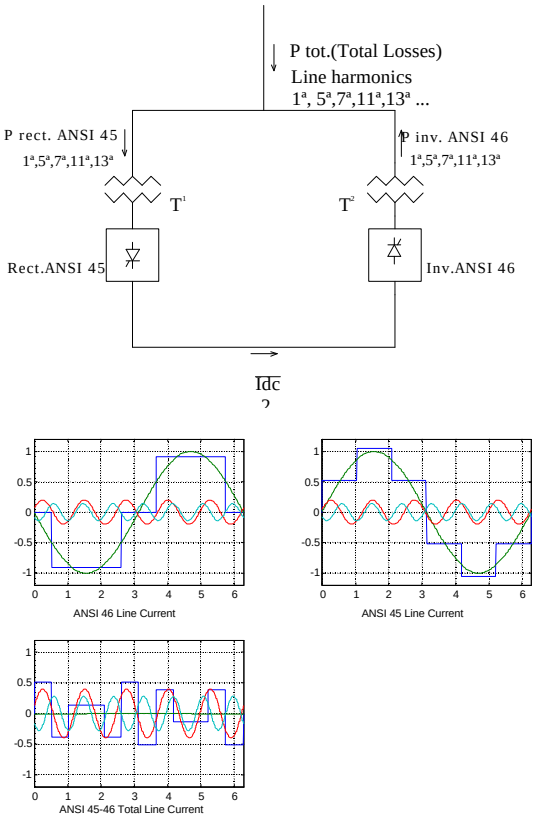

Fig. 4.AC Line Harmonics in the Test Configuration.

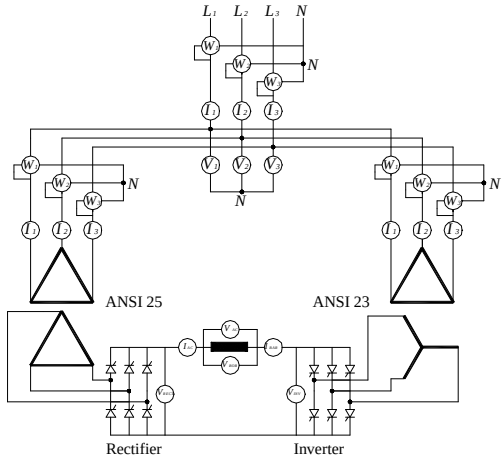

Fig 5: Experimental Configuration at Laboratory.

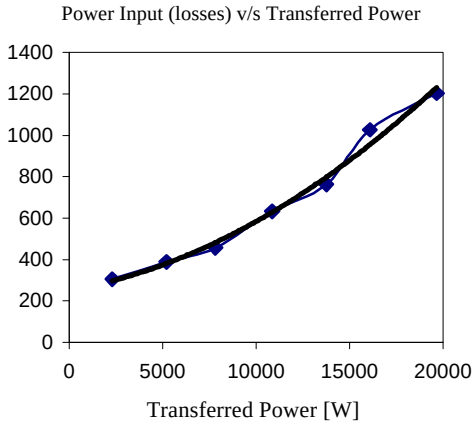

Fig. 6 Power Relationship.

the total losses were around of 10% of the power transferred
between the rectifierr and inverter at full load. As an example if the power in the rectifier is 9[kW], and this power is transferred to the inverter, the power supply from the network is aproximately 1.1[kW]. That means a total losses in transformer-rectifier and transformer-inverter equal to 0.55[kW] each.

Since both 6 pulses converters (rectifier and inverter) are identical and symmetrical , it can be considered that each equipment consume half of the total losses. The strong tendency of the copper losses is appreciated as they are proportional to the square of the current. It can be considered that iron losses are approximately constant since it depends on the frequency and the applied voltage (sinusoidal).

ADDITIONAL LOSSES AT FULL LOAD

Additional losses are given by the following relationship:

$$Padic = Pent_{Rec} - Psal_{Inv} - Pfe_{tot} - Pcu_{tot} - Pbar - Psem$$

When $Pent_{rec}$ is the power input at the rectifier, $Psal_{inv}$ is the power output at de inverter, Pfe_{tot} are the total iron losses Pcu_{tot} are the total cooper losses, Pbar are cooper

losses in the equipment bars, Psem are semiconductor losses. The copper losses (Pcu) were calculated for each transformer according the losses measured in the short circuit test, multiplied by the square of the current ratio. The iron losses (Pfe) are measured on no load test and it can be considered constant, since voltage is sinusoidal. The losses in the connection between rectifier and inverter (Pbar) are calculated considering the DC current and AC current component and the equivalent measured resistance. The losses in the semiconductors (Psem) were determined from Handbook data, (120º conduction and average thyristor current equal to 1/3 of the DC current that circulates among rectifier and inverter).

As is established in Fig.2 and Fig.4, $Pent_{rec}$ - $Psal_{inv}$ is the total power supplied by the network and it correspond to the total losses.

VI. Reactive Power

According to Fig.2 and Fig.4, the network have to be able to supply the required reactive power for the test. If not, a capacitor bank must give it.

The reactive power have 2 components: the fundamental component that depends on the total fundamental current and the trigger angle and the harmonics component, that deals with current harmonics.

Reactive power considerations is very important for the test design. As an example, in the laboratory test the following values were obtained:
Total active power in rectifier and inverter :100%
Active power given by network : 5%
Reactive power (fundamental+harmonic component): 40%
In order to reduce this reactive power , fundamental component can decreased by the use of capacitor banks. The reactive power harmonic components can be mitigated using resonant filters.

Due to the paper extention, the analysis of reactive power mitigation is not possible to give here in details. However, an example calculated for a 35 ton/day plant (see Fig. 1 and Fig.2) is shown in Fig. 7. Without capacitor bank and resonant filters (5 and 7) the losses power given by the network results 84 kW, but thetotal reactive power Q was 742 KVAR. Introducing capacitor bank in order to reduce to 0 the fundamental reactive power and using resonant filters for harmonics 5th and 7th the total reactive power decreased to 309 KVAR for both 6 pulses unit (105 KVAR each).

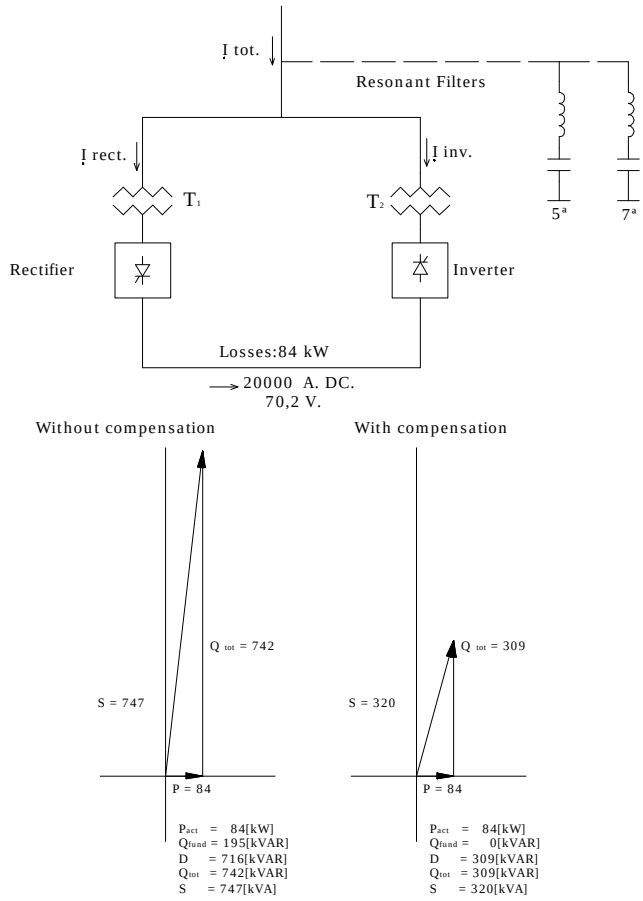

Fig. 7 Reactive Power Compensation.

VI. Conclusions

The results were all satisfactory ones. The proposed test allows to obtain at the factory the total losses of each 6 pulses converter operatring at rated current and rated voltage. To do this is necessary a total power from electric network equivalent only to the losses, instead of equipment rated power. Concerning reactive power, it have to be evaluated according to each specific equipment.

The values obtained experimentally for the aditional losses were around 1%. It is expected that this value could be higher in the case of real equipment that have oil immersed transformers (losses on the transformer tank) and interphase reactors (Ansi 45-46).

VII. Acknowledgement

The authors gratefully acknowled the support of Universidad Técnica Federico Santa María across the DGIP 98.26.22 Project.

VIII. REFERENCES

IEEE Recommended Practices and Requirements for Harmonics, Control in Electrical Power Systems,IEEE Standard 519-1992.1992.
International Electrotechnical Commission,IEC Recommendation 146,Semiconductor Convertors.1973.