Digital Acquisition of Voltages in Electrical Drives for Application in Observers and Vector Control

Anderson Vagner Rocha
CEFET-MG
Av. Amazonas, 5253 – N. Suissa – Belo Horizonte, MG
anderson@planetarium.com.br

José Carlos Rodrigues de Oliveira & Selênio Rocha Silva
CPDEE - UFMG
C.P. 209 – CEP 30123970 – Belo Horizonte, MG
jcarlosr@novell.cpdee.ufmg.br & selenios@cpdee.ufmg.br

Abstract – The acquisition of instantaneous voltages in modern electrical drives is a complex and relevant issue, mainly when the observation of the internal states of the machine or the on-line identification of parameters is essential to guaranty a high dynamic performance of the drive. This paper makes an evaluation of the most used techniques for the measurement of voltages, and proposes a completely digital implementation for the acquisition of the instantaneous values of the fundamental components of terminal voltages and their integrals, for a static PWM drive with induction motor. Experimental evaluation permits to discuss the advantages and the problems associated to the proposed scheme.

I. Introduction

The acquisition of the instantaneous values of voltages and currents in static PWM drives has become an important issue in high performance electrical drives, due to the need of estimation /observation of the internal states (flux and speed), and also of the machine parameters. Several methods have been proposed, with the aim of getting a precise measurement of voltage and current in the terminals of an inverter [T.-H. CHIN, 1998], but they suffer from limitations, either of experimental nature, or due to the large range of operating frequency presented by modern drives.

The utilization of sensorless techniques is a good example to show the need of accurate measurements of voltages. Implementations that employ vector control strategies, algorithms for the estimation of flux and speed and, in some cases, methods for parameter estimation, are critically dependent of a precise acquisition of the machine terminal variables, which presents a worse result for operation in low speeds. For the specific case of stator flux observers, necessary to the orientation of the (d,q) coordinate axis, the induction machine voltage model is normally employed, but is dependent of the integration of the stator voltages, based in techniques not well dominated until now.

This work proposes an efficient and robust alternative for the measurement and acquisition of the instantaneous values of the fundamental components of PWM voltages applied to the stator of an induction machine, as well as of their integrals. The implementation of the measuring system is substantially digital, employing last generation components in the construction of the hardware. Experimental results will be analyzed, and their implications in the implementation of the whole drive will also be discussed.

II. Conventional Acquisition of PWM Signals

The mostly commonly approaches, adopted for the acquisition of PWM voltages applied to an induction motor, are based upon the following procedures:

a) Measurement of the width and the amplitude of the PWM pulse (T.-H. Chin, 1990);
b) Utilization of the reference values of the PWM command (Stopa & Silva, 1997);
c) Measurement of voltages by analog means (differential amplifiers, transformers or Hall sensors) and their filtering (Lyra & Silva, 1995);
d) Measurement of voltages with low-pass filter, to solve the DC drift problem (Myoung-Ho Shin, 1998);
e) Measurement of instantaneous voltages with switched analog integrators (T.-H. Chin, 1998).

The main problems of these methods are:

- the cost of dedicated hardware [(a) and (d)];
- the lack of compensation of the voltage drop in the semiconductors;
- the dead time necessary for their switching [(a) and (b)];
- the phase and amplitude errors introduced by the filters and the transducers [(c)];
- the difficulty of tuning and compensation of gains and other parameters in the analog circuitry [(c) and (e)].

The integration of voltages, necessary to the estimation of flux, is usually performed by one of two following procedures:

a) Analog processing with dedicated hardware made with discrete components, which provides an output signal corresponding to the integral of stator voltages. This signal is acquired by an analog channel of an A/D converter board, and it is transformed into a digital number, which is employed by the algorithms of estimation and control.
b) Integration by software, the measurement of stator voltages being done by analog filters, also built from discrete components. In this analog section, the output is a signal correspondent to the fundamental component of the stator voltages, which is acquired by an A/D board and is integrated by a numerical algorithm.

Among the problems presented by the two preceding methods, we can cite:
Method (a): Analog integrators are strongly affected by offsets and noise.
Method (b): Analog filters do not present versatility in the tuning of their parameters or in the changing of their configuration. They also introduce amplitude and phase errors between the true value of the variable and its measured version, these errors being function of the frequency of the signal, making it difficult to correct them by conventional techniques, in the case of operation of the drive in variable frequency. Another problem associated with this method is that the performance of analog filters is highly dependent of the (limited) precision of the components used in their practical implementation, and this makes the hardware more expensive.

III. Digital Acquisition of PWM Signals

<u>Digital Integrator of Stator Voltages</u>

A proposition for the digital integration of PWM voltages for the estimation of the flux was made by DE FORNEL & OLIVEIRA, [1991] and by OLIVEIRA [1992], in the case of a drive for induction motor, with a current controlled inverter having three hysteresis loops. That work, done theoretically and by simulation, and validated by experimental results, was developed in the “sensorless” approach, as it has presented an observer of electromechanical variables without any sensor attached to the

machine, making the drive very robust from the mechanical point of view.

In that implementation, only the logical states (0 or 1) of the PWM voltages were detected, and the currents were not measured, but reconstituted by software. The flux observer was based on the digital integration of two line voltages, made by a dedicated and completely digital hardware. This proposition was motivated by the discrete nature of the PWM voltage imposed to the machine, and also by the fact that the processing of the estimation algorithms was made in a digital microcomputer, making the conventional analog stage unnecessary.

Using an (α,β) coordinate system fixed in the stator, the induction machine voltage model was employed for the estimation of the stator flux (in reality, the above mentioned work has estimated the mutual flux, but the principle presented here is the same):

$$\hat{\vec{\varphi}}_s = \int \hat{\vec{v}}_s dt - \int \hat{R}_s . \hat{\vec{i}}_s dt \qquad (1)$$

It was showed in detail [OLIVEIRA, 1991] that DC components appear in the integrals of the stator voltages, part of them due to disturbances like off-sets in these voltages or in the associated conditioning circuits. On the other hand, the operation of the drive in variable frequency (so, also with variable voltages) introduces amplitude and phase distortions in the stator voltages and currents, during the transients. This fact is responsible for another class of large value DC components, which add themselves to the ones appeared from the circuitry. To solve these problems it was introduced an adaptive procedure in the algorithm of estimation, making the detection of the DC components of the integrals of the vector stator voltage [first term in the right side of (1)], and also of the DC components of the integrals of the voltage drop in the stator resistance (second term), obtaining their differences, and summing these differences to the second term. This strategy proved to be robust and effective, and this kind of feedback has, then, characterized the implemented system as an Observer.

The diagram of the two integrators is showed in Figure 1. The detector of the states of the current PWM stator voltages permits their logical reconstitution (signals CT1 and CT2 for VAB, and CT3 and CT4 for VBC). Each integrator is a binary counter, working in a constant clock frequency created by an oscillator, and its operation is done in accordance to a logical combination of its two logical signals, e.g., enabled to count up or down, or inhibited.

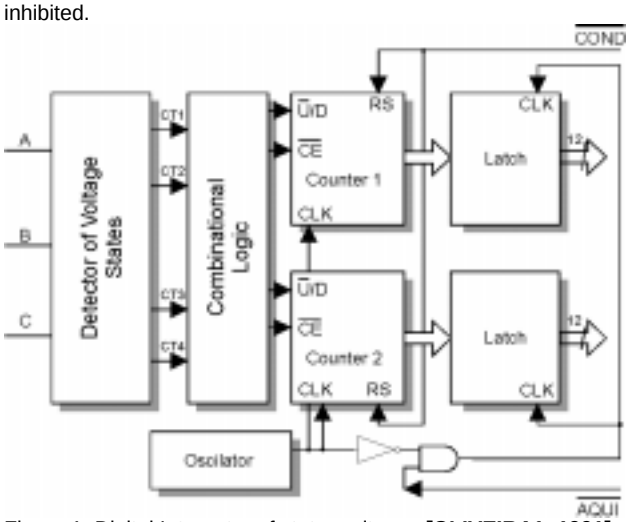

Figure 1. Digital Integrator of stator voltages **[OLIVEIRA1, 1991]**

In order to avoid the problem of saturation in the open loop integrators, the digital counters had their outputs forced to zero (reseted) by the signal COND, each time they reached a vicinity of one of the extreme counting values. The adaptive procedure added to the algorithm of estimation initially conceived to compensate for the two described classes of DC perturbations, proved again to be valuable and robust in the presence of this reset. In fact, the reset of the hardware counters is another form of introducing DC components into the integrals.

The acquisition of the output data from the digital counters, by the microcomputer, was done using two latches. In current operation, they follow respectively the states of their counters, but with a time lag of half a clock period, in such a way that they can wait for the stabilization of data at the outputs of the counters. During the task of acquisition, however, the logical signal AQUI "freezes" the outputs of these latches, permitting the microcomputer to read data without any ambiguity, and not disturbing the counters in their normal work of integration.

In the integrator of voltages above described, the acquisition of voltages was restricted to a detector of logic states, as the voltage E of the DC bus of the inverter was considered constant. There was not a mechanism for compensating, neither the voltage drops in the semiconductors, nor the dead time.

<u>Digital Sensor of the Fundamental Components of the Stator Voltages</u>

Another digital implementation, but for the acquisition of the fundamental component of the terminal voltages, was presented by Böcker (1991). In his work, the fundamental components of PWM voltages (regular sampling modulation method) were measured without the use of analog filters, and the acquisition by an A/D board was also eliminated. The integral of each voltage was performed permanently by a digital counter, and the difference between its output data at the end and at the beginning of a PWM period was calculated, its result representing the instantaneous mean value of the fundamental voltage synthesized by the inverter. This arrangement is very similar to that of the preceding digital integrator, but needs synchronization with the PWM pulses.

On the other hand, each counter was said to be clocked by a voltage controlled oscillator, suggesting some kind of correction of the effects of voltage drops and dead times of the inverter, which influences the voltages appeared at the machine terminals. In ideal conditions, the measurement of instantaneous mean values should be equal to the correspondent value of the reference signal, used to generate the PWM pulse pattern.

IV. Proposed Approach for the Acquisition of PWM Signals

This paper proposes the construction of a common fully digital hardware for the acquisition of both the fundamental components of the stator voltages and their integrals, unifying the results of the two papers described above, by using two last generation EPLDs (Erasable Programmable Logic Devices), eliminating some limitations detected in these preceding works, and finally making a deeper analysis of the results.

Figure 2 presents the general structure of the hardware, which was implemented at the Laboratory of Electrical Drives and Power Electronics of CPDEE /UFMG.

The utilization of EPLDs gives more flexibility to the implementation, because they can be reprogrammed, besides the fact that they perform a relatively large packaging of the logical circuits, permitting the operation of the counters at a higher clock frequency, thus attaining a greater number of logical states, e.g., improving the resolution of the acquired voltages and of their integrals.

V. Hardware structure.

The following hardware structure was constructed, to implement experimentally the drive and the acquisition system:

- Microcomputer Pentium II – 300 MHz, 64Mb RAM.
  Acquisition board, with an A/D converter of 100 kHz, 16 analog channels in common mode for the acquisition of currents, and with simultaneous sampling and 24 bits of logical I/O.

- Three-phase Inverter, with IGBTs from SEMIKRON, 1200V – 75 A, and its associated firing circuits.
- Digital Processing Module, for obtaining the stator voltages and their integrals.
- Inverter - Digital Processing Module Interface.
- PWM Interface, for the generation of the symmetrical regular pattern.
- Microcomputer – Inverter Interface, for the conditioning of signals and the command of the IGBTs drivers.
- 2 HP Induction motor – DC machine group.
- Resistive load attached to the DC machine (operating in generator mode).

PWM Interface

The Inverter receives its command from a PWM Interface [LACERDA, 1994]. This software and hardware module were conceived to be connected to the expansion bus of an IBM PC compatible microcomputer. Its operation is based on three programmable Intel® 8254 timers. In this work, the interface was programmed to generate a modulation method with regular symmetric sampling, meaning that the pulses are symmetrical in time, related to the PWM period.

Microcomputer – Inverter Interface

This circuit was conceived to provide the conditioning of the analog signals coming from the inverter and going to the acquisition board [PARMA, 1999]. Hall transducers perform the measurement of the line currents. In addition, this interface treats the logical signals charged to enable the drivers

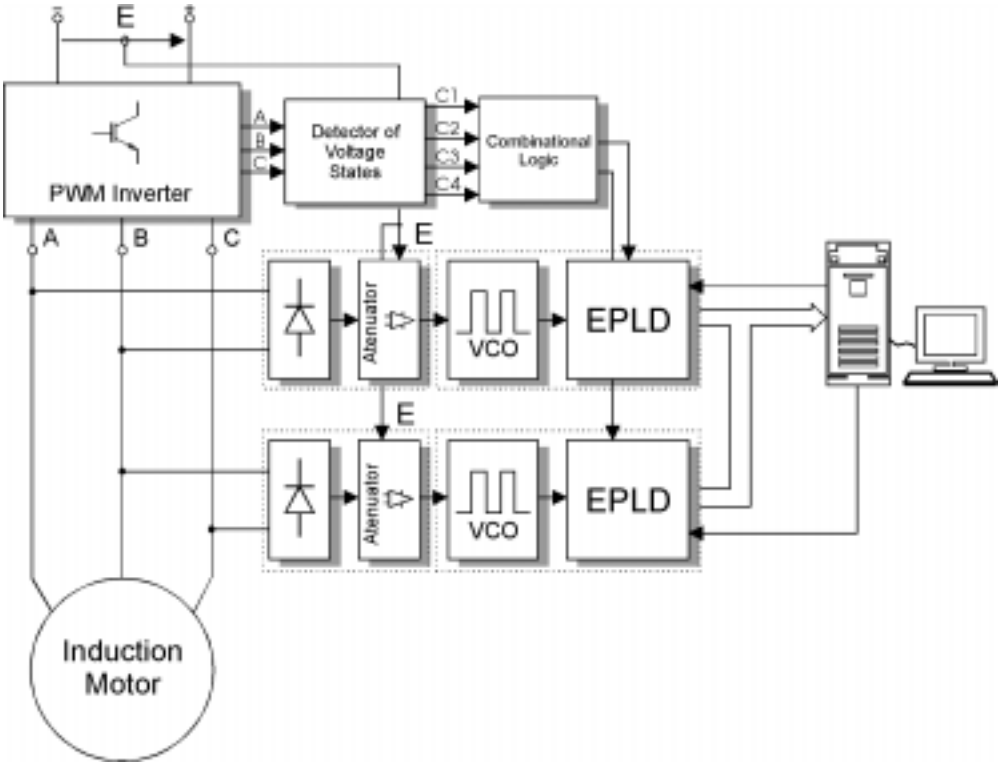

Figure 2. Diagram of the digital processing module for acquisition of stator voltages and their integrals.

of the inverter and to establish the PWM pattern, as well as the alarm logic of the inverter itself and of the regulation circuit of the DC bus, receiving or sending these logical variables to the microcomputer.

VI. Digital Processing of the PWM Voltages and their Integrals

Inverter - Digital Processing Module Interface

The first stage consists on a detector of states of the line voltages. It uses high-speed photo-couplers, and was able to reconstruct PWM pulses so thin as 1µs, which occur when the instantaneous values of the fundamental voltages are near zero.

The diode rectifiers have the task of extracting the levels of the PWM pulses, for the two line voltages, with the aid of light capacitive filters. As these levels are of the order of 300 Volts or more, it is necessary to attenuate them, before using the two resultant signals to excite the Voltage Controlled Oscillators. The possibility of using the voltage E of the DC bus, instead of the rectified ones, was also left, but it was not employed in this work.

Digital Processing Module

This board is the heart of the digital acquisition system. Its functions are the integration of the line voltages applied to the stator of the induction machine, as well as the acquisition of the fundamental components of these voltages.

This module works assisted by the interface just described. It has two EPLDs from ALTERA®, which are used to perform the most important functions of the board. An EPLD is a completely re-programmable device, and permits the construction of complex logical architectures, giving modularity and versatility to a project. As this component is very sensible to voltage surges, all its communication with other circuits was done with the introduction of buffers. On the other hand, as the number of extractions of this chip from its socket is restricted, the module was projected with an interface for on-board programming, in accordance to recommendations from ALTERA®.

Each one of the two counters is performed within one separate EPLD. The logical signals which control the counter for VAB, ordering it to count up or down, or inhibiting it, are shown in Table 1. The signals CT1 and CT2 come from the detector of states of this line voltage.

Table 1 . Logical reconstitution of voltage V_{AB}

CT1	CT2	VAB	$\overline{U}/D$	$\overline{CE}$
0	0	Not permitted	x	x
0	1	+E	0	0
1	0	-E	1	0
1	1	0	x	1

Each counter has 16 bits, and the second one receives its control signals in a similar manner as described above.

The 16-bit outputs of the two counters share a unique bus, and the real-time software executed by the PC selects, sequentially, the chip for reading, putting the other in three-state.

Each EPLD was programmed to have a dedicated ALU (Arithmetic Logic Unit), capable of making additions and subtractions in 16 bits, operating with the output of its counter. In this manner, the same chip can furnish to the PC, depending on a selection by software, the accumulated values of the voltage integrals, or the values of the integrals corresponding to a single PWM period, e.g., the value of the instantaneous fundamental voltage.

The two clock signals for the counters are generated by two Voltage Controlled Oscillators (VCOs), which can receive, in their inputs, analog signals coming from a reference constant voltage source, or from the DC voltage E (properly attenuated) or, finally, two analog signals proportional respectively to the rectified values of the stator PWM voltages VAB and VBC. The first case refers only to an initial testing situation, as the VCOs were introduced exactly to compensate the gains of the counters to variations in the levels of the PWM voltages. These variations are due, either to disturbances on the three-phase, 60 Hz alternate source that feeds the inverter, or to the voltage drop in the inverter, caused by the load effect of the induction machine. The VCOs are, in summary, a particular implementation of A/D converters.

The linearity between the output frequency and the analog reference voltage of the VCO was tested with care. This is a very important characteristic, as it influences directly the output signals of the two digital counters. Errors at this stage correspond to a change in their overall gains, modifying the instantaneous values of the acquired voltage and of their integrals. A highly linear VCO from Harris®, was chosen, based on the MOS HCT technology.

The utilization of the voltage E of the inverter DC bus as a reference for the VCOs introduces errors in the digital counters, as they will operate at a bigger counting rate because, even if the voltage variations in this DC bus is being taken into consideration, the voltage drops in the switches of the inverter are not. The better information to feed the VCOs, which was used in this work, comes from the voltages really applied to the induction machine but, in the case of PWM voltages, they first need to be properly rectified.

VII. Experimental Results

Figure 3(a) presents the acquisition of an integral. One can see the effect of inherent filtering introduced by the integration, the presence of the DC component, and also the reset.

Figure 3(b) shows the effect of the reset of the integrators upon the acquisition of voltages. A surge (peak) in the acquired voltage is very pronounced, synchronized with the reset.

In Figure 4, the surge in the measured voltage has disappeared, due to a filtering action introduced in the algorithm. The real-time software knows exactly the moment when the hardware counters are reseted, because it generates the order to reset. In consequence, the computation of the instantaneous mean value of the voltage is simply not made at this PWM period, and the value obtained in the preceding step is repeated.

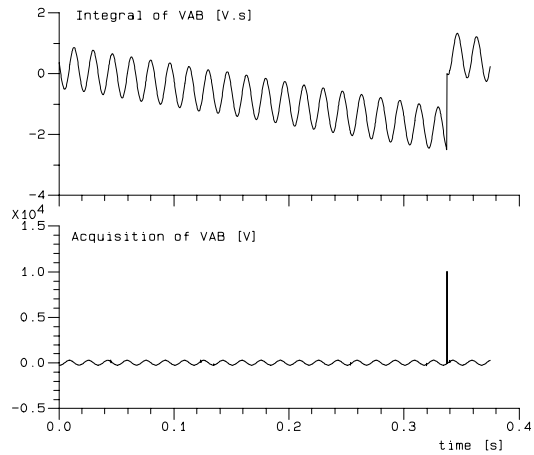

Figure 3 (a) - Output of an integrator of stator voltage.
(b) - Surge in the acquired voltage, during the reset.

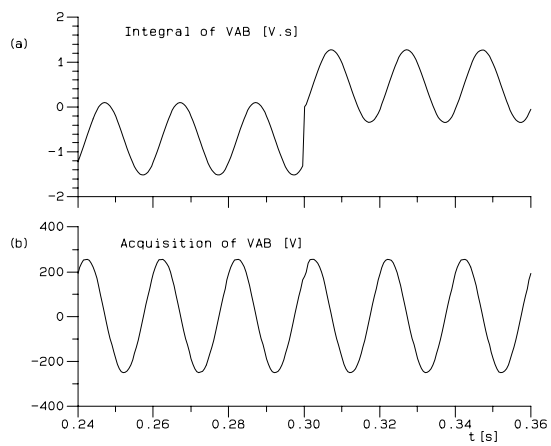

Figure 4 – Filtering action in the acquisition of voltage.

We show, in Figure 5, the result of the digital acquisition of the integral of one of the line voltages (5a), the reference voltage signal used to generate the PWM pattern (5b), and also the fundamental component (5c). In the experimental curves, the proper scale factors were introduced.

To permit a better view of the performed acquisition, in Figure 6, a few cycles of the reference voltages and measured ones (instantaneous average voltages - VMI) are presented. This figure confirms the good performance of the proposed methodology, in terms of phase angle and amplitude errors. In the acquisition of voltages, the rate of harmonic distortion was found to be inferior to 2%, proving the quality of the proposed strategy, as illustrated by Figure7.

VIII. Conclusions

An effective method of digital processing and acquisition of PWM voltages and their integrals was proposed and tested, with good results. The proposed strategy consisted in the treatment of variables of discrete nature by digital means, using last generation programmable devices. This digital approach gave a great flexibility to the implemented prototype, and bypassed several problems introduced by conventional analog methods. In this scheme, the detection of DC components and its adaptation were essential to the stability and robustness of the algorithms.

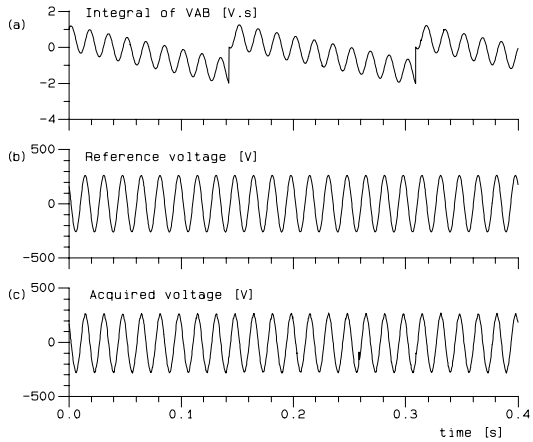

Figure 5 - Integral of line voltage, the reference voltage signal and the fundamental component.

.

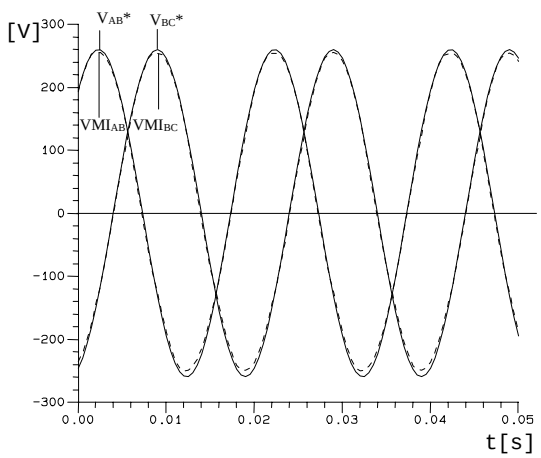

Figure 6 – Measured and reference output line voltages

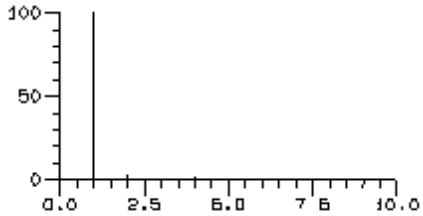

Figure 7 – Harmonic analysis of the measured voltages

It must be remembered, however, that the level of the PWM pulses remains an analog quantity, and this was taken into account in this work by the employment of voltage controlled oscillators, a kind of A/D converter. In this manner, an analog step remains, which must be projected and constructed with care.

Acknowledgments

The authors would like to express their gratitude to the Brazilian governmental agencies CNPq and FAPEMIG, for their valuable financial aid for the development of this work.

IX. References

1. DE FORNEL, B.; OLIVEIRA, J.C.R.
Adaptive Discrete Estimator for Induction Motor Control
Proc. EPE – 4th European Conference on Power Electronics and Applications, Vol. 2, pp. 132-137, Florence, Italy, 1991.

2. OLIVEIRA, J.C.R.
Contrôle d'un Variateur Asynchrone sans Capteur de Vitesse. Estimation du Flux, du Couple et de la Vitesse. Réalisation de la Commande Numérique. Doctoral Thesis, INPT, Toulouse, France, 1991.

3. OLIVEIRA, J.C.R.; DE FORNEL, B.; HAPIOT, J-C
Microprocessor Implementation of an Adaptive Estimator for Induction Motors. Proc. IECON – IEEE Intern. Conf. On Industrial Electronics, Control, Instrumentation and Automation, Vol. 1, pp. 127-132, San Diego, USA, 1992.

4. YANG, G.; T-H CHIN
Instantaneous Output Voltage Detector for Voltage Source Inverter JIEE National Conference, Vol. 5, N. 489, p. 41, Japan, 1990.

5. T-H CHIN; NAKANO, M.; HIRAYAMA, T.
Accurate Measurement of Instantaneous Values of Voltage, Current and Power for Power Electronics Circuits.
PESC'98 – 29th Annual IEEE Power Electronics Specialists Conference, Vol. 1, pp. 302-307, USA, 1998.

6. SHIN, M.; HYUN, D-S; CHO, S-B; CHO, S-Y; CHOE, S-Y
An Improved Stator Flux Estimation for Speed Sensorless Stator Flux Orientation Control of Induction Motors
PESC'98 – 29th Annual IEEE Power Electronics Specialists Conference, Vol. 1, pp. 1581-1586 , USA, 1998.

7. BÖCKER, J.; JANNING, J.
Discrete-Time Flux Observer for PWM Inverter Fed Induction Motors. Proc. EPE – 4th European Conference on Power Electronics and Applications, Vol. 2, pp. 171-176, Florence, Italy, 1991.

8. LYRA, R. O C.; SILVA, S.R.
PWM Exciter for Flux Control of Isolated Induction Generator Proceedings. EPE-95, Vol. 3, pp. 233-238, Sevilla, Spain, 1995.

9. STOPA, M.M; Luiz, A.S.A.; Moreira, A.F. SILVA, S.R.; Cortizo, P.C. & Silva. "Resultados Experimentais do Controle por Orientação de Campo da Máquina de Indução", IV COBEP, pp. 133-138, B H, 1997.

10. PARMA, G.G.; "Acionamento de Máquina de Indução Utilizando Redes Neurais e Sistemas de Estrutura Variável." Qualifier Exam of PPGEE/UFMG, Belo Horizonte, 1999.

11. LACERDA, Wilian S., "Sistema de Desenvolvimento para Acionamentos Elétricos – Aplicação ao Controle de Posição de uma Máquina Síncrona a Ímãs Permanentes", MSc Thesis,PPGEE/UFMG, Belo Horizonte, 1994.

12. ALTERA CORPORATION
MAX 7000 Programmable Logic Device Family Data Sheet
USA, July, 1998.