Application Aspects of Modern PWM AC Motor Drive Systems
Part I: Coupling Currents and Bearing Problems

Gilberto Costa Drumond Sousa
Departamento de Engenharia Elétrica - UFES
CEP 29.060-970 – Vitória -ES
g.sousa@ele.ufes.br

Nilson Santos Marcellos
CEFET-ES
CEP 29050 – 040 - Vitória – ES
nilson@etfes.br

***Abstract* - While fast IGBT switches currently employed in PWM inverters for AC drives enable high frequency operation, with its attendant improvement in current waveform, and a more effective energy conversion, they also causes serious threat to machine insulation, as well to bearings life. The mechanism of coupling current generation is discussed here as well as their relation to bearing currents. Also presented are some methods aimed at minimizing these problems.**

I. INTRODUCTION

The use of Insulated Gate Bipolar Transistor (IGBT) switches in PWM inverter for AC drives has become pervasive nowadays, due to its superior performance. New IGBT generation achieves higher switching speeds, square RBSOA, and lower on-state voltage drop, that combined with inherent simple gate drive requirements makes the IGBT the switch of choice for a large power spectrum of inverters, reaching the MVA range. Significant research effort in semiconductor technology has been devoted to reducing turn-on and turn-off times, thus resulting in an ever increase in inverter switching frequency. This has the obvious benefits of reducing the low order harmonic frequencies, thus resulting in a nearly sinusoidal current waveform, and consequently, a more effective energy conversion. Other benefits of reduced switching times include lower harmonics losses, and decreased acoustic noise [1].

In spite of these advantages, there are severe drawbacks as well. The high rate of dv/dt that the AC motors are subjected can reach up to 6000 V/μs, what imposes stresses to stator winding insulation, and are also responsible for premature machine bearing failure [2]. Other important drawbacks include over voltages, radiated and conducted electromagnetic interference (EMI).

Bearing currents had been long reported to occur at sinusoidal 60 Hz operation. This is due to magnetic asymmetry of motor construction that induces end-to-end rotor shaft voltages, which are responsible for circulation of current through the bearings. However, even for a perfectly symmetrical machine, under PWM operation, the high rate of the dv/dt of modern IGBT induces currents, since the lubricant oil film acts as a capacitor dielectric. When an insulation breakdown occurs, the discharge current flows through the balls and inner race of the bearings, resulting in electrical discharge machining [2].

In drive systems where the motor is located at a long distance from the inverter, over voltages had been also observed, and found to be caused by voltage wave reflection, even for older BJT PWM inverters. This problem has increased significantly with the use of fast IGBT inverters, in which case the phenomena can be observed with relatively short cable lines. Another elements that must be considered when AC motors are operated from high carrier frequency inverters are the coupling currents. These are created by parasitic capacitive effects and were found to contribute to bearing currents, ground currents and conducted EMI.

This paper addresses the above mentioned problems, in a two part structure, due to the comprehensive nature of the

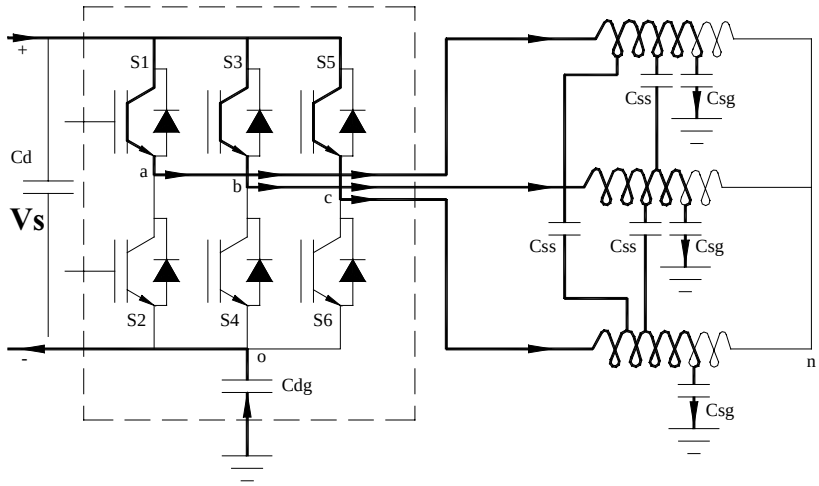

Fig. 1: Simplified inverter circuit diagram showing machine parasitic capacitive coupling [1]

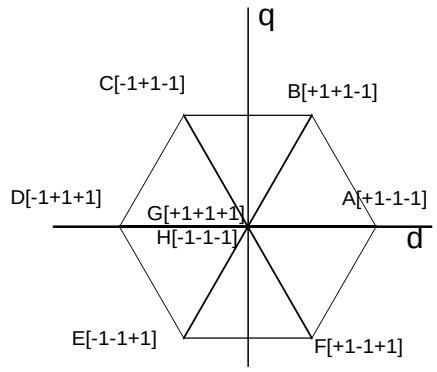

Fig. 2: Possible switching states for an inverter in the d-q plane [10]

subject. Part I will focus on the coupling currents and bearing currents, whereas Part II will discuss the over voltage and EMI problems.

II. ORIGIN AND TYPES OF COUPLING CURRENTS

Coupling currents are originated through the excitation of machine parasitic capacitances by high dv/dt voltage signals present in modern IGBT inverters, as discussed above. As they play a major role in the explanation of important phenomena discussed in this paper, they will be initially addressed here.

A simplified three-phase inverter induction machine circuit diagram is shown in Fig. 1. Although usually ignored, there are always parasitic capacitance between negative DC link bus (C_{dg}) and ground, between stator winding to ground (C_{sg}), as well as capacitive coupling among stator phases (C_{ss}). As well known, there are eight switching states, corresponding to the logic states A to H, depicted in Fig. 2, where +1 denotes upper switch on, and –1 implies lower switch on. When switches S1, S3 and S5 are closed (state G), the difference of potential between the three motor terminals is zero (i.e., Vab=Vbc=Vca=0), and these are known as differential voltage. However, if we consider that there exists parasitic capacitances C_{sg} and C_{dg} of considerable value, common mode coupling currents will flow from the source to the ground [1] and back to the negative DC bus, as indicated by bold lines in the Fig. 1.

The common mode voltage is defined as a voltage potential relative to a common reference, the negative DC bus in this case (e.g., V_{ao}, V_{bo}, and V_{co}) [1]. Thus, the currents generated by these voltages are named common mode currents that can also overload the inverter, and cause unexpected current trips. The neutral voltage with respect to negative DC bus can be computed as:

$$V_{no} = (V_{ao} + V_{bo} + V_{co}) /3 \qquad (1)$$

This common mode voltage Vno has the same switching pattern as the three gating signals for the switches of the upper legs of the inverter as illustrated in Fig. 3. It has high dv/dt and high amplitude values that reaches the DC bus voltage value. The frequency components are the same as those of the PWM spectrum.

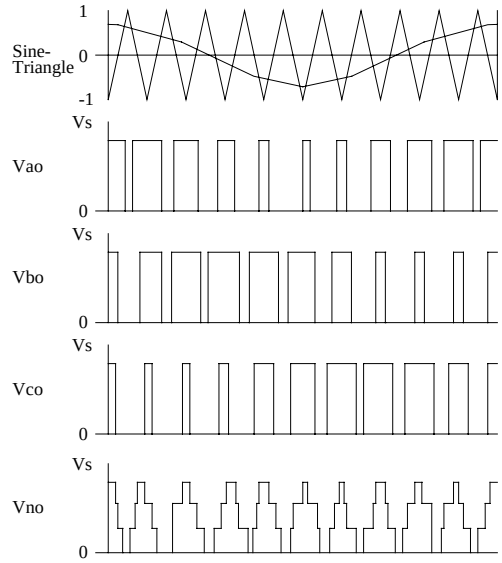

Fig. 3. Commom mode voltages in PWM inverter drives.

The parasitic capacitance of the motor winding, that normally do not influence the behavior of the drive system at 60 Hz sinusoidal operation, have a great influence in the case of high carrier frequencies. As researchers have realized [4], above certain frequency the motor winding begins to behave capacitively with significant high frequency current components. As a consequence, its necessary to utilize a high frequency machine model whenever the necessity to analyze its performance under high switching frequency arises.

Besides the capacitances discussed here, there exists the capacitance among turns of each winding, as well between windings, but these do not contribute to the common mode current. However, their influence will be observed as components of the differential mode currents. In fact, the total load current of the motor (I) is composed of the fundamental current (I_f), the PWM related harmonic currents (I_h), and the total coupling currents (I_{cp}): that in turn is formed by the common mode components:

$$I= I_f + I_h +I_{cp} \qquad (2)$$

From what has been explained, coupling current itself is formed by two components, namely, the common mode (I_{com}) and the differential mode (I_{dif}):

$$I_{cp} = I_{com} + I_{dif} \qquad (3)$$

The differential mode currents circulate among the motor phases, and do not flow through the case and ground conductors, although they can assume larger amplitude than the common mode currents. Therefore, only the common mode currents originate the bearing currents and the grounding currents. Figure 4 shows the parasitic capacitive coupling for phase “a” of the stator, whereas

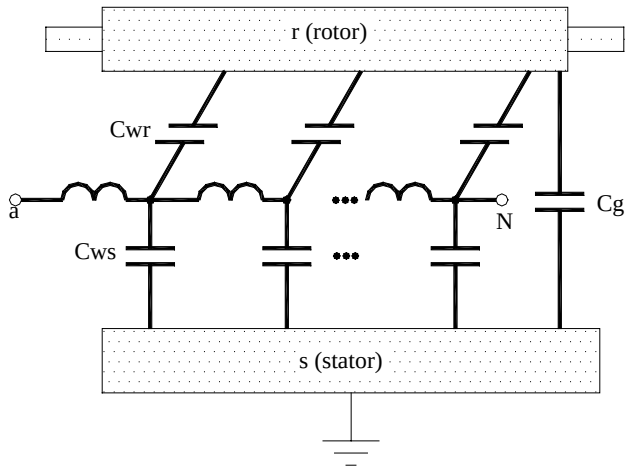

Fig. 4: Circuit diagram representation of parasitic capacitive coupling of a motor phase winding

Fig. 5 (a) e (b) exhibits two models proposed by [5] to represent the effects of the leakage currents that flow through the parasitic capacitance. Figure 5 (a) is a motor model adequate for the explanation of the overvoltages that occur at the motor terminal while Fig. 5 (b) is a model suitable for the analysis of the high-frequency leakage currents.

The experimental plot of the coupling current, for a 3hp 230V induction motor is show in Fig. 6, where the upper part shows the machine neutral to negative DC bus rail voltage, and the lower part the observed common mode current. It can be seen that this current exhibits a high frequency ringing. In this case the motor case has been connected to the negative DC bus which forces the equivalent common mode voltage internal impedance to equal zero. This was made with the objective of enlarging the effect of the current $I_{ws.}$ Figure 7 shows the total phase coupling current, where the coupling current now appears as spikes occurring at every switching instant.

Fig. 8 shows a leakage current waveform when a phase in PWM inverter is switched. The oscillatory leakage current is a nonnegligible amount that flows trough the stray capacitors between the stator windings and the motor frame [5].

There are two types of bearing currents that utilize the paths formed by the stator iron, bearings and rotor. One is termed non-circulating bearing current and is formed by a small portion of the common mode current that flow

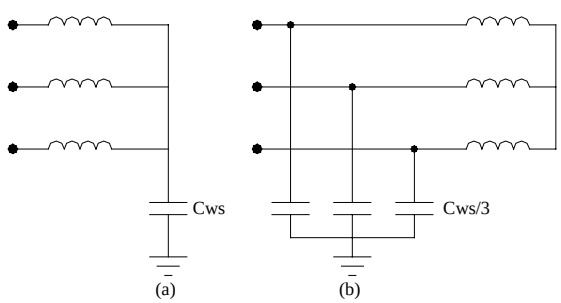

Fig 5: Motor Model for the high-frequency leakage current[5]

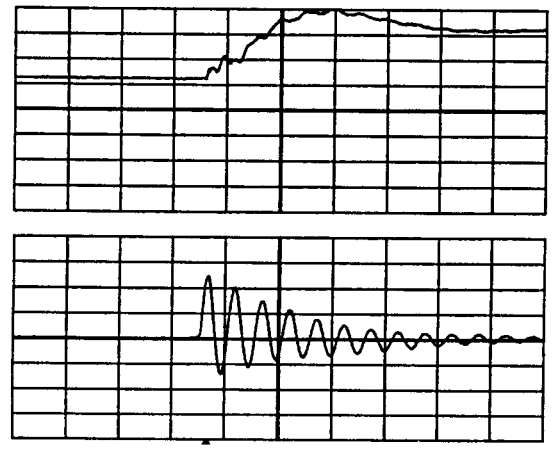

Fig. 6: Experimental response for neutral voltage (upper, 100 V/div.) and common mode current (lower, 2 A/div.) to a voltage step input [1]. Time scale: 1μs/div.

through the air-gap capacitor $C_{wr,}$ and is related to discharge mode current, and the dv/dt related conduction mode current. Its path is in accordance to Fig 9, and circulates in the conductive loop formed by the stator winding, rotor shaft, bearing, stator case, and ground. The other type of bearings current do not circulate through the ground, but through the conductive loop formed by the motor case, rotor shaft and both bearing ends in accordance to Fig. 10 (a) [9].

This current is also attributed to the common mode coupling current, but its generation involves the parasitic coupling and the inductive coupling in the stator winding. Due the parasitic capacitance between the stator case and stator winding, the current in the two coil sides will not be equal. A current equal to $I+\Delta I$ flows into terminal "a" while a current equal to $I-\Delta I$ flows out of the terminal "b". There is a net current in the stator winding flowing axially so that, by Gauss Law, there must exists a net flux linkage surrounding the motor shaft, as show Fig. 10 (b).

Since common mode current are of in very high frequency in a drive system a pulsating current will circulate only during a brief period, following a PWM switching, as show as shown in Fig. 8. The common mode coupling current causes the bearing currents, while the differential mode currents do not, but both are responsible for EMI emissions in a drive system [9].

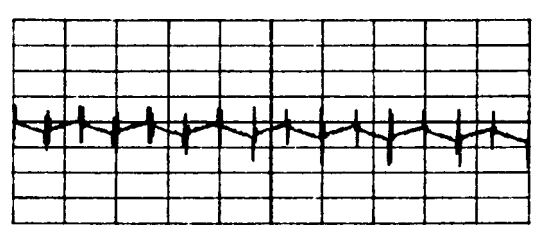

Fig. 7: Total phase current showing coupling current Effects. 2 A/div and 50 μs/di v. [1]

III. THE BEARING CURRENTS

Bearing currents are related to the common mode currents, particularly the portion, which flows from the stator winding to the rotor. A machine model for the bearing currents was proposed in [3] and is show in Fig.11. Here the bearing is represented by a small resistance R_b in series with a parallel combination of a non-linear Z and oil film capacitance C_b. The impedance Z varies according to operating conditions, and can represent the occasional short-circuits in the dielectric due to ball inner race contact caused by to asperities. Coupling capacitance C_{sr} between stator and rotor allows capacitive charging and discharging that yields to the generation of the shaft voltage V_{rg}, that depends on the common mode voltage, capacitance C_{sr} and bearing impedance.

Fig. 12 shows that when the ball bearing asperity point contacts puncture trough the C_b oil film, V_{rg} is zero. When the microscopic point contacts are open, C_b is allowed to charge by the capacitor divider action between C_b, C_{rf} and C_{sr}, synchronous with the V_{sng} modulation. A destructive 3,5 A peak current discharge, termed Electric Discharge Machining (EDM)[8], occurring in less than 100ns and pitting the bearing race, is shown when V_{sng} charges V_{rg} beyond the 30V peak breakdown voltage of the bearing oil lubricant film. The result is an EDM current impulse through a small localized bearing contact area.

The low level currents associated with other transition instants are dv/dt induced, due to PWM switching are in the hundreds of milliampere range, and occur with the rise in rotor potential.

TABLE I
RATINGS OF TESTED INVERTER AND INDUCTION MOTOR

Input Voltage	3 x 220	V
Rated Current	21.0	A
Maximum current	52.0	A
Modulation Scheme	Sinusoidal	PWM
Carrier frequency	2.4	KHz
Rated Output	3.7	KW
Rated Torque	23.5	Nm
Maximum Torque	70.6	Nm
Motor Speed	1500/2000	R/min

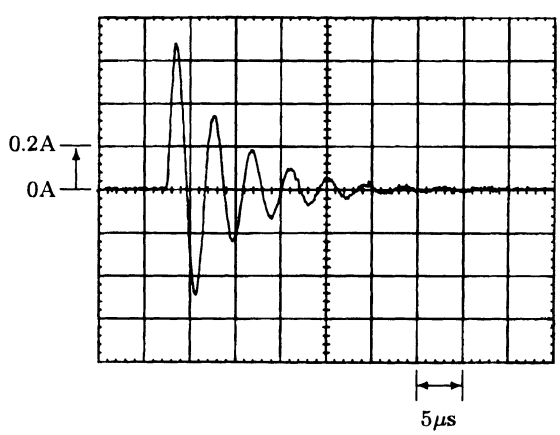

Fig. 8: Leakage current waveform

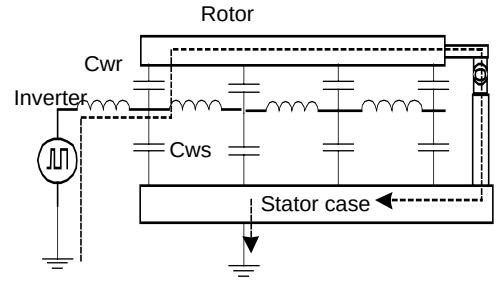

Fig. 9: Non-circulating type current[9]

A review of the technical literature does not indicate a consensus on the effects of this relatively small induced current [8], but it appears that they do not cause bearing problems.

The existence of capacitively coupled dv/dt and EDM bearings currents with PWM VSI drives depends on three conditions:

1) A source of excitation (V_{sg}), which is transferred by the zero sequence or common mode components to the stator neutral to ground voltage (V_{sng}); 2) A capacitive coupling mechanism, accomplished by the stator to rotor capacitance (C_{sr}); 3) sufficient V_{rg} buildup, a random occurrence depending on the existence of C_b[7].

Actual reduction in bearing life was found to depend also on the mechanical load that has the effect of promoting the contact of balls and races, thus reducing the rotor induced voltage level, and consequently, the magnitude of the damaging discharge current.

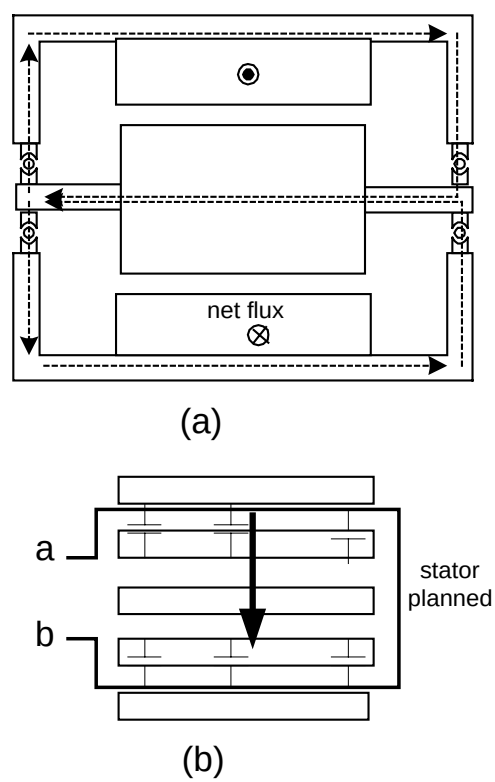

Fig. 10. Path of circulating type bearing currents.

Some of the methods available to address the bearing current problem are listed below [3]:

i) Insulate both bearings to break the current path. This solution incorporates an insulation forming an additional capacitance in series with C_b, Fig. 11, which redistributes Vrg between the two series capacitor[12].) Ceramic ball bearing have also been proposed, but with added cost and significant lead times. There are at least two drawbacks with insulation mechanisms. The first is a thermal limitation, due to significant heat flow from rotor losses that are dissipated via bearing metal-to-metal contact with the motor frame. The second shortcoming is the concern over high voltage coupled onto an insulated rotor shaft [3].

ii) Apply conductive grease to the bearings. In this case, suspending metallic particles forms conductive grease. Laboratory test data indicates that the mechanical surface damage increases by approximately 60% when the conductive agent is added, due to abrasion. This indicates the conductive agent in the grease accelerates mechanical wear and would shorten the life bearing [11].

iii) Utilization of the brushes connected from the shaft to the stator to deviate bearing currents from bearings. This method is currently used in numerous applications. This method is also the well-known solution to the classical bearing currents caused by rotor eccentricity, electrostatic discharge, and other problems. The use of a single brush should be avoided in practice because it could enhance the possibility of an occurrence of the circulating bearing current. The circulating current will flow into the bearing, which is not located in the same end of shaft as the brush. Thus, it suggested that two brushes be installed at both shaft ends [1].

iv) Introduce an electrostatic shield between the stator and rotor structures. There are too, the electrostatic shielded induction motor (ESIM) proposed by [3] that has an internally mounted Faraday shield to diminish the coupling between the stator and rotor (reducing C_{SR}). The types of armor plating are:

Copper foil tape, constructed by adhering copper foil tape to the stator laminations; *Copper foil tape on the slot stick covers,* constructed using copper foil tape built into each slot stick cover and grounded; *Conductive copper paint,* constructed by spraying a conductive copper paint onto the entire length of the stator, including end windings.

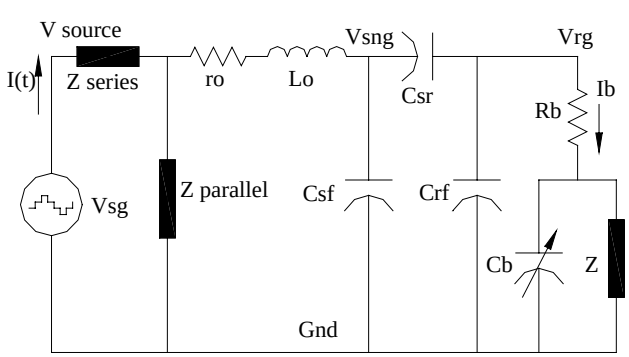

Fig. 11:Common mode equivalent circuit

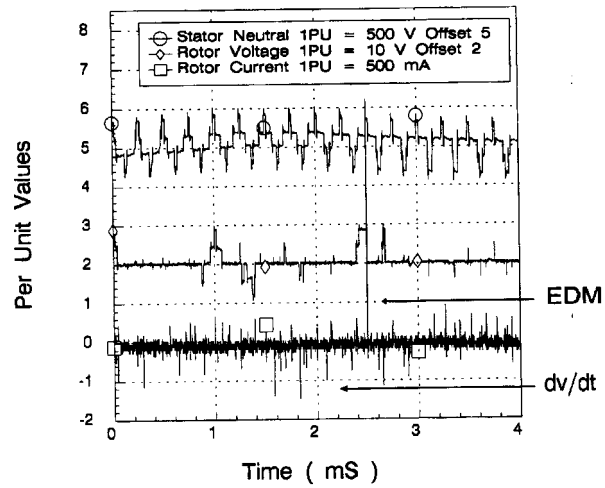

Fig. 12: AC drive operation with electric discharge machining (EDM).

Various output filters arrangements can be used to condition the inverter output voltage before it is applied to the cable. The advantage of adding output filtering is that the dielectric stress on the motor insulation and the inverter cable charging current can both be reduced [6]. The most commonly types of inverter passives output filters are:

Simple output line reactors
Output limit filter;
Sine wave output filter
Motor termination filter.

IV. Conclusion

This paper attempted to address the problem of coupling currents and their effects on bearing life. Contrary to the common believe in power electronics community, faster is not necessarily better. At least for PWM inverter drives, it has been demonstrated that the high dv/dt rate of modern IGBTs are detrimental to both machine insulation and bearings. Some methods aimed at minimizing these problems have also been present, but effective solutions remain as an open field for future research.

V. References

[1] S. Chen, Bearings Current, EMI and soft switching in Induction Motor Drives, Ph. D. Dissertation, University of Wisconsin-Madison, 1995.

[2] A. Von Jouanne, P. Enjeti, and W. Gray, “Application Issues for PWM Adjustable Speed AC Motor Drives”, IEEE Industry Applications Magazine, September/October 1996.

[3] D. Busse, J. Erdman, R. Kerkman, D. Schlege and G. Skibinski, “Characteristic of Shaft Voltage and Bearing Currents”, IEEE Industry Applications Magazine, November/December 1997.

[4] D. Maly, “High-Frequency Time Harmonic Loss in Induction Motors.” M.S. Thesis, University of Wisconsin - Madison, 1991.

[5] S. Ogasawara and H. Akagi, “Modeling and Damping of High Frequency Leakage Current in PWM Inverter Fed AC Motor Drive

Systems", IEEE Transactions on Industry Applications, September / October 1996.

[6] P. T. Finlayson," Output Filters for PWM Drives with Induction Motor", IEEE Industry Applications Magazine, January/February 1998

[7] D. Busse, J. Erdman, R. Kerkman, D. Schlege and G. Skibinski, "System Electrical Parameters and Their Effects on Bearing Currents," IEEE Transactions on Industry Applications, March / April 1997.

[8] J. M. Erdman, R. J.Kerkman, D. Schlegel and Gary Skibinski, "Effect of PWM Inverter on AC Motor Bearing Currents and Shaft Voltages", IEEE Transactions on Industry Applications, March / April 1996

[9] S. Chen and T. Lipo, "Circulating Type Motor Bearing Current in Inverter Drives", IEEE Industry Applications Magazine, January/February 1998.

[10] A M. Broe, Al. Julian, T. A. Lipo, "Neutral-to-Grounding Voltage Minimization in a PWM Rectifier /Inverter Configuration", Wisconsin Power Electronics Research Center Report 06/96.

[11] DuPont Corporation, Deepwater, N. J., Kritok GPL246 Electrical Conducting Grease.