New Topology for the Commutation of Unidirectional Power Switches, without Harmonic Generation

Alejandro Ernesto Cejas
Universidad Nacional de Río Cuarto/Río Cuarto/CP5800/Córdoba/ Fax:54-058-676246/ARGENTINA/
acejas@ing.unrc.edu.ar

Carlos Jorge Maffrand
Universidad Nacional de Río Cuarto/Río Cuarto/CP5800/Córdoba/ Fax:54-058-676246/ARGENTINA/
cmaffrand@ing.unrc.edu.ar

Juan W. Dixon
Pontificia Universidad Católica de Chile/Santiago/Casilla 306, Correo 22/Fax:56-2-552-2563/CHILE/
jdixon@ing.puc.cl

***Abstract* – This paper present a new and simple topology for capacitors commutation trough unidirectional power switches. It is based on one branch with three capacitors precharged, connected in delta and a special and simple switch by branch, implemented with one thyristor, and one antiparallel diode. During the off state, the capacitors remain pre charged to the peak voltage line. In the on state, they are connected when the voltage among the lines reaches its valued peak voltage negative. The main characteristics of this new topology are: 1) it doesn't generate harmonic; 2) it is simpler and less expensive in comparison with other topologies which using electronic switch; 3) each branch be commuted cycle by cycle; 4) it doesn't require of force commutated of the switch; 5) it doesn't introduces currents of sequence zero to the system; and 6) problems of inrush currents are avoided during the connection y/o disconnection, allowing to commutation in a dynamic way of the switch. The paper analyse the circuit proposed, the way it works and the results obtained under operation.**

I. INTRODUCTION.

To compensate reactive power, diverse strategies and different topologies are used, for example commutation of banks of capacitors and inductors, called Static Var Compensators (SVC) [1-3], and recently, the calls Force Commutated Var Compensators (FCVC) which use PWM techniques [4, 5]. Nonetheless, most of them have some inconvenience type. The capacitors bank presents problems of inrush currents during the connection and disconnection [6, 7], the Compensators that commute one inductors are harmonic polluters, and the compensators that use PWM techniques, they generate harmonic of high frequency and they are still too expensive and complex. On the other hand, the Synchronous Compensators, presents a slow dynamic response, and require a lot of maintenance and they are expensive.

Many solutions have been presented in the literature given above, to minimise those drawbacks, but only with partial success. The purpose of this work is to present a new topology for the commutation of the capacitors on the network, which eliminates the problems before mentioned.

This topology has the following distinctive characteristics: 1) it doesn't generate harmonics; 2) it is much simpler and less more expensive, compared with other topologies that use electronic switches; 3) it can commute each branch cycle to cycle; 4) it doesn't require of forced commutation to pass from the on state to off state and vice versa; 5) the problem of the inrush current during the connection and disconnection is avoided, and 6) it doesn't introduce currents of sequence zero in the system. The last two characteristic are the most important, because they allow the connection and disconnection from the capacitors cycle to cycle improving the compensation dynamics using condensers, since the form in which are connected and they disconnect the condensers, it always guarantees the initial conditions that satisfy the *"zero current"* and the *"zero voltage"*. This means that any harmonic distortion won't be generated during the normal operation of the recurrent change of the bank of the condensers.

II. THE PROPOSED SYSTEM.

The figure 1, sample an example of the proposed system for the Commutation Unidirectional Power Switches, in the connection of the capacitors. That it uses a binary chain of branches of condensers those that are inserted in the network through the switch "S_W", built with a thyristor and a diode in antiparallel. The simplicity of the proposed system is in both, so much, in the circuit of power, like in the control of the ignition circuit. The circuit of power is simpler and less costs, since only it uses three thyristors and three diodes instead of six thyristors, for each branch of the bank the capacitors.

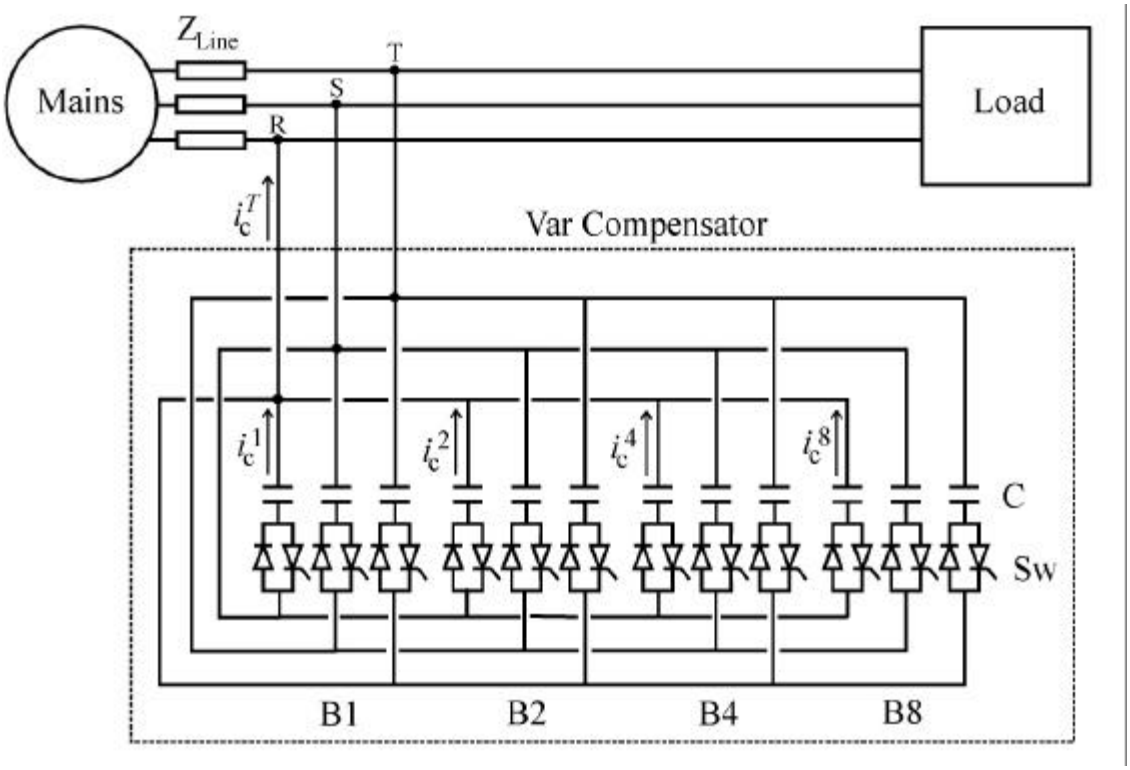

Figure ***Erro! Argumento de opção desconhecido.****. Proposed System in the connection of the Capacitors.*

The compensator three phase of the example of figure 1 has four branches, calls B1, B2, B4 and B8. Each branch has a value of the condensers in particular with the following characteristic: the branch B2 duplicates the value of the condensers of B1. In the same form, B4 duplicate the value of B2, and B8 it duplicates the value corresponding of B4. Then, if for example the value of the condenser of B1 is 100µf each one, then those of B2 will be 200µf, those of B4 will be 400µf, and those of B8 will be 800µf. In this form, the compensator, will be able to compensate power it reactivates from 0µf, up to 1,500µf, with steps of 100µf.

The system can also have eight or more branches to reduce the size of the step, each new branch increases the step in binary form.

To make that this device works appropriately, a connection and soft disconnection of the branches are demanded, the contribution of this work is to show a topology, and a strategy of capable control to make this.

The figure 2, for simplicity, shows the portion of the switch that connects the condenser located phases between two of one of the branches of the circuit proposed in the figure 1. When the thyristor "*Th*" is in the "off" state, the diode "*D*" it loads the condenser "*C*" until the negative voltage peak value of the line voltage, $-V_L$. The condenser cannot be discharged because "*Th*" it is in the "off" state, and the portion of the branch is in "*open circuit*".

To connect the portion of the branch, an ignition pulse is applied to the gate of the thyristor, but only when the voltage of it lines reach its maximum negative voltage. In this way, a soft connection is obtained. The current will increase beginning from zero without distortion and it will follow a sinusoidal wave form, and after a cycle is completed, the voltage to the terminals of the condenser will have the value again $-V_L$, and the thyristors will be blocked automatically, unless that a new ignition pulse is applied.

With this operation way, the "*connection*" and "*disconnection*" of the portion of the branch it will be soft, and without distortion. If the ignition pulses, are generated when the voltage this in $-V_L$, exactly, they won't be generated neither harmonic neither inrush currents. This is because two important facts are achieved: 1) the dV_c/dt, in $-V_L$ is zero, and 2) the anode voltage to cathode on the thyristor is similar to zero, $v^{Th}_{(t)} = 0$.

Assume that $v_{(t)} = -V_L$, it is the line voltage, V_C the voltage of the condenser in the initial moment and $v^{Th}_{(t)}$ the anode voltage to thyristor cathode. The appropriate connection of the branch will be when:

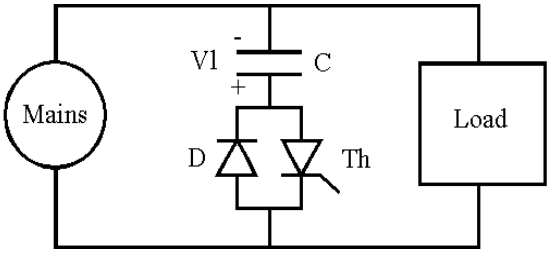

Figure ***Erro! Argumento de opção desconhecido.****. A portion of the proposed switch, with one thyristor and one diode.*

$$v_{(t)}^{Th} = v_{(t)} - V_C = V_L sin(vt) - V_C = 0, \qquad (1)$$

or:

$$v_{(t)}^{Th} = V_L sin(wt) + V_L = V_L[1 + sin(wt)], \qquad (2)$$

then, when *sin(wt)=-1*, *wt* = 270º of line.

To *(wt)* = 270º of line, the thyristor lights, and the condenser "*C*" it begins to drive, this happens at the moment in which the phase that is not connected to the ends of the branch, crosses by zero in ascending form respect to the neutral one. On the other hand since the shot will take place in *(wt)* =270º of line. Then the current on the condenser will be:

$$i_C = C\frac{dv_C}{dt} = C\frac{d(-V_L \cos(wt))}{dt} = (wC)V_L sin(wt_o), \qquad (3)$$

This means that the current will leave in zero like a way of wave sinusoidal without distortion or inrush problems.

The figure 3 sample the current and the voltage on the condenser, when the thyristor is commuted before according to the analysis mentioned. In this example, the thyristor be in the "on" state during "four cycles". Then they he goes at the "off" state during the next "four cycles", and then they be in the "on" state again during "four cycles" more.

It can be noticed that the current doesn't present distortion, and this of agreement with the previous equations.

The only requirement to achieve this result is that the previous initial conditions have to be respected strictly. If this doesn't happen the inrush problems they will appear. For this reason, it is required a precise time of connection, and the conditions of voltage of the condenser initials, $-V_L$.

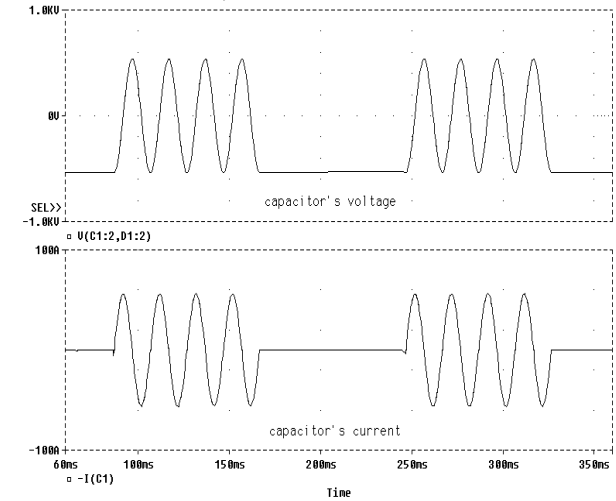

Figure ***Erro! Argumento de opção desconhecido.****. Capacitor's voltage and current.*

The compensator that has been presented operate in connection delta. However, it should be kept in mind that the gates of the thyristors will be floating regarding the neutral point, so that the shots they should become isolated, via pulse transformer or opto isolator.

III. RESULTS OF THE SIMULATION.

The figure 4 shows the results of the simulation in P-Spice done on one of the branches of the proposed compensator in figure 1. Where an inductive load is supposed and a branch of the compensator is commuted composed by three capacitores of 330uf each one.

It is presented in the first diagram the voltage in terminals of the capacitors that compose the branch. Notice you that the voltage of pre charge of the same ones is the negative pick of $-V_L = -538V$.

This means that the voltage in the "off" state that should support the thyristors and the diodes for each portion of the branch it is two times the voltage line peak, this is $v^{Th}_{(t)OFF} = 1076V$.

As it is observed in the second diagram, when taking place the shot from the switch to the 270º of the line voltage, the current in that instant is going by zero so that the variation it will follow a form of sinusoidal wave.

In the third diagram the current of lines appears, it note that, although goes of an inductive current to a capacitive current, deformations are not observed nor appear current of insertion, that which is excessively

satisfactory and it demonstrates the soft commutation of the switch.

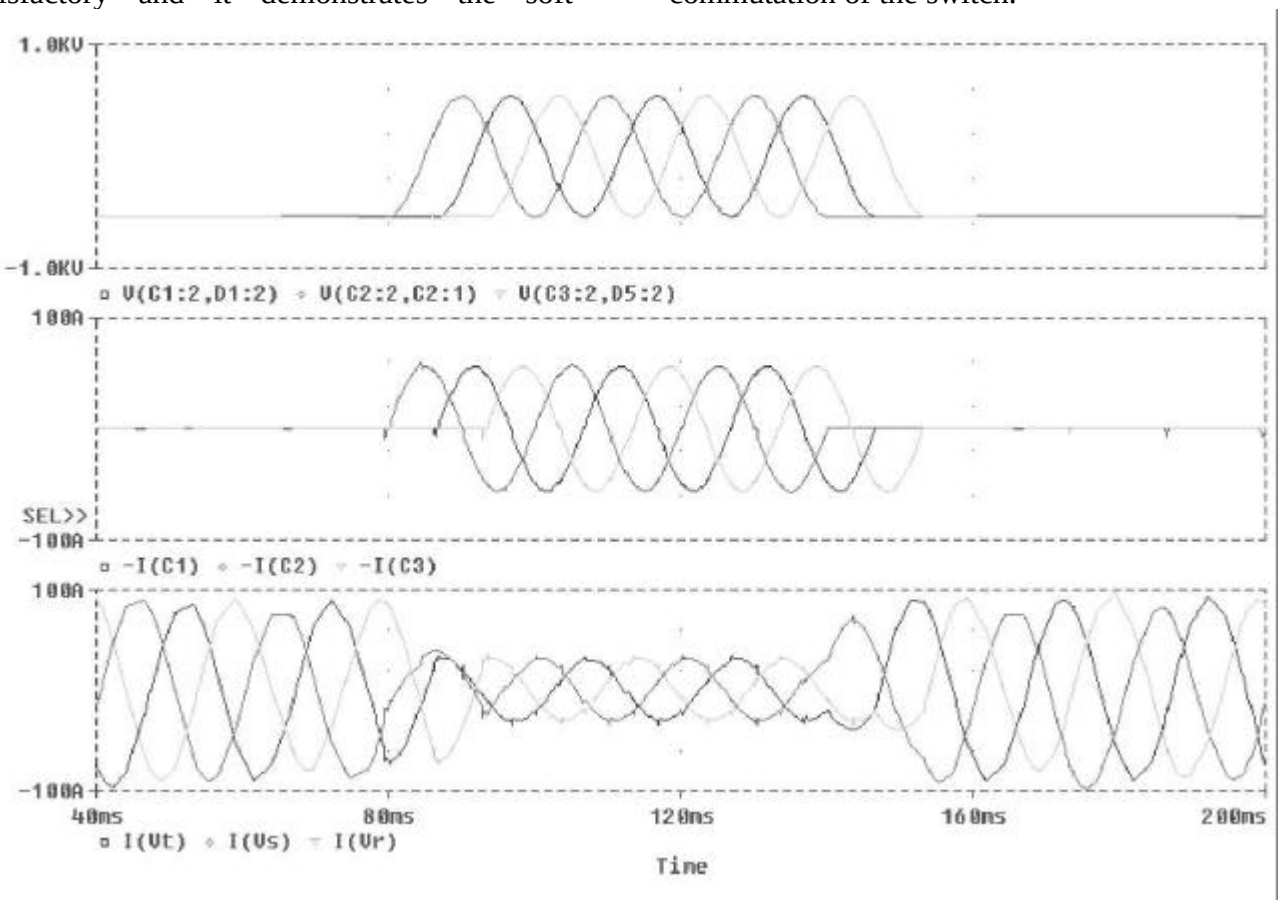

Figure ***Erro! Argumento de opção desconhecido.****. Voltage and Current waveform.*

IV. CONCLUSIONS.

A new topology for the compensation of reactive power, that allows to use in efficient form, unidirectional switches of power (SCR) is presented. The main characteristics of this new topology are: 1) it doesn't generate harmonic in the line current; 2) it is simpler and less more expensive in comparison to other compensators than they use electronic switches; 3) it can compensate reagents cycle to cycle; 4) it doesn't require of forced commutation on the switches; 5) problems of inrush currents are avoided on the line during the connection and disconnection of each branch; and 6) it doesn't generate current of sequence zero on the line.

The simulations showed that the mentioned characteristics make feasible the application of a similar compensator. The conditions that should be completed for the appropriate operation are: 1) it is demanded to have the initial voltage on the condenser similar to $-V_L$, itch negative of the line voltage, and 2) that the voltage to the terminals of the switches in the instant of the connection, be zero. But even in the case that these two conditions are not satisfied perfectly, in the practice a small inductance in series with the condensers can be added to eliminate current picks to small maladjustment in the voltage, the constant of time will be bigger than the $di_{(t)}/dt$, of the thyristors.

At the moment tests with a switch able are taking place to handle a power of 25 Kvar.

V. ACKNOWLEDGEMENT.

The author gratefully acknowledge the contributions of student Sebastian Juan Aguirre.

VI. REFERENCES.

[1] H. Frank and B. Landstrom. *"Power Factor Correction with Thyristor-Controlled Capacitors"*, ASEA Journal, Vol.45, Nº6, 1971, pp. 180-184.

[2] R. T. Byerly, D. T. Poznamiak, and E. R. Taylor. *"Static Reactive Power Compensation for Power Transmission Lines"*, IEEE Trans. on PAS., Vol. PAS-101 Nº10, October 1982, pp. 3997-4005.

[3] P. Mehta and M. Darwish. *"Active Reactive-Power Controller"*, IEEE Proceedings on Elect. Power Appl., Vol. 142, Nº6, November 1995, pp. 405-409.

[4] J. W. Dixon and D. R. See. *"Open-Loop Var Compensator for Industrial Applications, Using to Simple PWM Pattern"*, IEEE Proccedings on Electric Power Applications, Vol. 144, Nº4, July 1997, pp. 257-262.

[5] Hua Jin Géza Joos, and Liz Lopes. *"An Efficient Switched Reactor Based Static Var Compensator"*, IEEE Trans on Ind. Appl., Vol. 30, Nº4, July/August 1994, pp. 998-1005.

[6] L. M. Smith. *"A Practical Approach in Substation Capacitor Bank Applications to Calculating"*, IEEE Trans on Ind. Appl., Vol. 31, Nº4, July/August 1995, pp. 721-724.

[7] L. Morán and A. Rivera. *"Desarrollo de un Sistema de Control para un Compensador Estático de Reactivos del tipo Compensador Conmutado por Tiristores"*, XI Congreso Chileno de Ing, Eléctrica 1995, pp. 4.4.1-4.4.5.

[8] J. W. Dixon, C. Maffrand and L. Morán. *"New Topology for Harmonic-Free, Dynamic Var Compensator Using Unidirectional Power witches"*,PESC98 Journal, Vol. 2, pp. 853.

[9] C. Maffrand, J. Dixon and L. Morán. *"Binary Controlled Static VAR Compensator, Based on Electronically Switched Capacitors"*,PESC98 Journal, Vol 1, pp. 1392.