REGULATION IMPROVEMENT IN DOUBLE FLYBACK CONVERTERS

Hernán Emilio Tacca
Universidad de Buenos Aires , Facultad de Ingeniería,
LABCATYP - Depto. de Electrónica - htacca@fi.uba.ar

***Abstract* - A simple method to improve voltage regulation in double flyback converters is based on simultaneous variation of switching frequency and duty-cycle allowing independent control of supply outputs. Design equations and procedures are given for the typical circuit sharing a common ground and some secondary turns.**

***Key-words :* double converters, output-voltage regulation, flyback converters, switch-mode power supplies.**

NOMENCLATURE

D	: duty-cycle factor.
f	: switching frequency.
$i_{S1/2}$	: current through secondary winding 1 (or 2).
$I_{O1/2}$	: DC output current through load 1 (or 2).
L_P	: magnetizing inductance referred to the primary winding.
$L_{S1/2}$	: magnetizing inductance referred to the secondary winding 1 (or 2).
n_P	: primary turns.
n_S	: secondary turns.
R_P	: primary serial parasite resistance.
$R_{S1/2}$	: secondary serial parasite resistance of output section 1 (or 2).
$t_{m1/2}$	: demagnetizing time of output section 1 (or 2).
$V_{O1/2}$	: DC output voltage 1 (or 2).
V_P	: primary supply voltage.

I. INTRODUCTION

In order to reduce the power supply volume, several converters are often merged in a multiple output topology , to share magnetic components and power devices.

A suitable topology for multiple output converters is the flyback one , especially in low power applications.

In double flyback converters both output voltages become related by the winding turns ratio.

Ideally, without Joule losses due to parasite resistances (fig. 1) :

$$V_{O2}/V_{O1} = n_{S2}/n_{S1} \qquad (1.1)$$

so , given an output voltage, the other one becomes clamped (slave regulation). Therefore, independent regulation is not possible.

Actually, the parasite resistances ever provoke voltage drops which reduce the output voltages as the respective load currents increase. In such a cases, the output voltages divert from the losseless theoretical values and corrections should be made using separate feedback [1][2][3] . For example :

a) Only the most critical output is fed back , while the other one is slave regulated.

b) A weighted average voltage derived from both outputs is fed back.

c) Only a single output voltage is controlled but analog comparators survey the outputs and take the control of the loop if limits are surpassed. Many evolved variations of this technique are possible.

d) Other linear or switchmode regulators may be cascaded to the preregulated outputs.

e) Controlled synchronous rectifiers may be applied to the output circuits whose regulation must be improved.

Some of these methods become complex, other ones are simple but have low efficiency, and someones show poor voltage regulation in wide variable load operation.

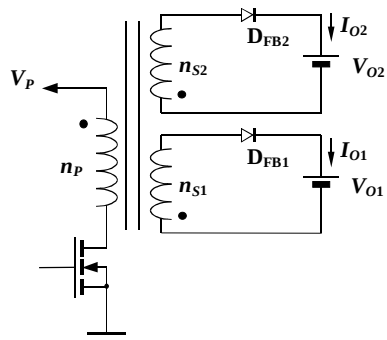

Fig. 1. Double flyback converter (basic topology).

A proposed method to achieve double independent regulation in other converter topologies [4]-[6] , may be used to improve the voltage regulation in double flyback converters. In the flyback case , it is not possible to achieve absolutely independent output control but for fixed multiple-output voltage supply applications, a better regulation is attained acting over both output voltages modifying simultaneously the duty-cycle D and the switching frequency f .

II. DOUBLE FLYBACK CONVERTER. DISCONTINUOUS MODE OPERATION

It will be assumed that both semiconverters operate simultaneously in discontinuous mode. The circuit model is depicted in fig. 2 . There, the power devices will be considered as ideal switches , grouping their serial parasite resistances with the winding ones. In first instance, the threshold drop voltages will be ignored. Also, it will be assumed that capacitors are bigs enough to reduce each output voltage ripple to a neglectible value.

The m.m.f. continuity after the transistor switch-off imposes :

$$n_P\ I_{P_{max}} = n_{S1}\ I_{S1_{max}} + n_{S2}\ I_{S2_{max}} \qquad (2.1)$$

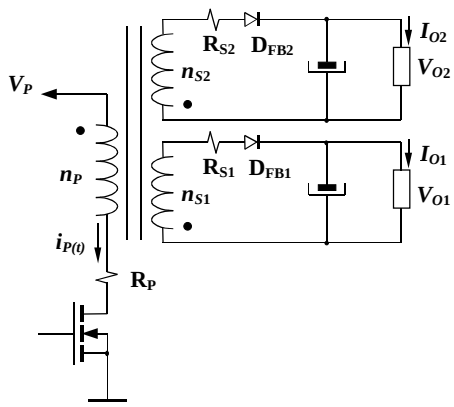

Fig. 2. Double flyback circuit model with parasite resistances

After the primary switching off , the secondary current $i_{S1_{(t)}}$ is :

$$i_{S1_{(t)}} = \left(I_{S1_{max}} + \frac{V_{O1}}{R_{S1}} \right) \exp\left(-\frac{R_{S1}}{L_{S1}} t \right) - \frac{V_{O1}}{R_{S1}} \qquad (2.2)$$

When $t = t_{m1}$ it results $i_{S1_{(t_{m1})}} = 0$, therefore :

$$I_{S1_{max}} + \frac{V_{O1}}{R_{S1}} = \frac{V_{O1}}{R_{S1}} \exp\left(\frac{R_{S1}}{L_{S1}}\ t_{m1} \right) \qquad (2.3)$$

Substituting 2.3 into 2.2 yields :

$$i_{S1_{(t)}} = \frac{V_{O1}}{R_{S1}} \left\{ \exp\left[-\frac{R_{S1}}{L_{S1}} \left(t - t_{m1} \right) \right] - 1 \right\} \qquad (2.4)$$

Then, the output power of the section 1 results :

$$P_{O1} = \frac{V_{O1}}{T} \int_0^{t_{m1}} i_{S1_{(t)}}\ dt =$$

$$\frac{V_{O1}^{\ 2}}{T\ R_{S1}} \left[\frac{L_{S1}}{R_{S1}} \left(\exp \frac{R_{S1}}{L_{S1}}\ t_{m1} - 1 \right) - t_{m1} \right]$$

Being $P_{O1} = V_{O1}\ I_{O1}$ and using 2.3 :

$$I_{O1} = \frac{V_{O1}}{T\ R_{S1}} \left[\frac{L_{S1}\ I_{S1_{max}}}{V_{O1}} - t_{m1} \right] \qquad (2.5)$$

From 2.3 it is derived :

$$t_{m1} = \frac{L_{S1}}{R_{S1}} \ln\left(1 + I_{S1_{max}}\ \frac{R_{S1}}{V_{O1}} \right) \qquad (2.6)$$

for $V_{O1}/R_{S1} >> I_{S1_{max}}$, the McLaurin approximation : $\ln(1+x) \cong x - \frac{1}{2} x^2$ (valable if $x << 1$) gives :

$$t_{m1} = \frac{L_{S1}\ I_{S1_{max}}}{V_{O1}} \left(1 - \frac{1}{2}\ I_{S1_{max}}\ \frac{R_{S1}}{V_{O1}} \right) \qquad (2.7)$$

On the other hand :

$$L_P = \left(n_P / n_{S1} \right)^2 L_{S1} = \left(n_P / n_{S2} \right)^2 L_{S2} \qquad (2.8)$$

Utilizing 2.5 , 2.7 and 2.8 , one obtains :

$$I_{S1_{max}} = \left(n_P / n_{S1} \right) \sqrt{2\ V_{O1}\ I_{O1} / \ f\ L_P} \qquad (2.9.a)$$

and through similar procedure :

$$I_{S2_{max}} = \left(n_P / n_{S2} \right) \sqrt{2\ V_{O2}\ I_{O2} / \ f\ L_P} \qquad (2.9.b)$$

Substituting 2.9.a and b into 2.1 , yields :

$$\sqrt{P_{O1}} + \sqrt{P_{O2}} = \sqrt{f\ L_P / 2}\ \ I_{P_{max}} \qquad (2.10)$$

For small R_P it is $L_P / R_P >> D\,T$, then :

$$V_P = L_P\ \frac{I_{P_{max}}}{D\,T} \text{ , which yields : } I_{P_{max}} = \frac{D\,V_P}{f\ L_P} \qquad (2.11)$$

and substituting into 2.10 , one obtains :

$$\sqrt{P_{O1}} + \sqrt{P_{O2}} = D\,V_P \Big/ \sqrt{2\ f\ L_P} \qquad (2.12)$$

where : $P_{O1} = V_{O1}\ I_{O1}$; $P_{O2} = V_{O2}\ I_{O2}$

On the other hand , making the power balance yields : $P_P = P_{O1} + P_{O2} + P_{R_{s1}} + P_{R_{s2}} + P_{R_p}$ (2.13)

where the converted power is :

$$P_P = \frac{1}{T} \left(\frac{1}{2}\ L_P\ \ I_{P_{max}}^{\ 2} \right) = \frac{f\ L_P}{2}\ I_{P_{max}}^{\ 2} \qquad (2.14)$$

The power lost in the primary resistance is :

$$P_{R_p} = \frac{R_P}{T} \int_0^{D\,T} i_{P_{(t)}}^{\ 2}\ dt = \frac{D}{3}\ I_{P_{max}}^{\ 2}\ R_P \qquad (2.15)$$

while in the secondary resistances (for example, in R_{S1}) :

$$P_{R_{s1}} = \frac{R_{S1}}{T} \int_0^{t_{m1}} \left(\frac{I_{S1_{max}}}{t_{m1}}\ t \right)^2 dt = \frac{t_{m1}}{3\,T}\ R_{S1}\ I_{S1_{max}}^{\ 2} \qquad (2.16)$$

and substituting the approximative equation $t_{m1} = L_{S1}\ I_{S1_{max}} / V_{O1}$ into 2.16 yields :

$P_{R_{s1}} = \left(R_{S1}\ L_{S1} / 3\,T\,V_{O1} \right) I_{S1_{max}}^{\ 3}$, then using 2.9.a :

$$P_{R_{s1}} = \frac{2^{3/2}}{3}\ R_{S1}\ I_{O1} \left(\frac{n_P}{n_{S1}} \right) \sqrt{\frac{V_{O1}\ I_{O1}}{f\ L_P}} \qquad (2.17.a)$$

and by similar procedure :

$$P_{R_{s2}} = \frac{2^{3/2}}{3}\ R_{S2}\ I_{O2} \left(\frac{n_P}{n_{S2}} \right) \sqrt{\frac{V_{O2}\ I_{O2}}{f\ L_P}} \qquad (2.17.b)$$

Substituting 2.17 and 2.15 into 2.13 :

$$\left(\frac{f\ L_P}{2} - \frac{D}{3}\ R_P \right) I_{P_{max}}^{\ 2} =$$

$$= P_{O1} + P_{O2} + \frac{2^{3/2}}{3\sqrt{f\ L_P}} \left[R_{S1}\ I_{O1} \left(\frac{n_P}{n_{S1}} \right) \sqrt{P_{O1}} + R_{S2}\ I_{O2} \left(\frac{n_P}{n_{S2}} \right) \sqrt{P_{O2}} \right] \qquad (2.18)$$

From 2.10 , one obtains :

$$I_{P_{max}} = \sqrt{2\ /\ f\ L_P} \left(\sqrt{P_{O1}} + \sqrt{P_{O2}} \right) \qquad (2.19)$$

which substituted into 2.18 gives :

$$2\sqrt{P_{O1}}\ \sqrt{P_{O2}} =$$

$$= \frac{2^{3/2}}{3\sqrt{f\ L_P}} \left[R_{S1}\ I_{O1} \left(\frac{n_P}{n_{S1}} \right) \sqrt{P_{O1}} + R_{S2}\ I_{O2} \left(\frac{n_P}{n_{S2}} \right) \sqrt{P_{O2}} \right] + \frac{2}{3}\ D\ \frac{R_P}{f\ L_P} \left(\sqrt{P_{O1}} + \sqrt{P_{O2}} \right)^2 \qquad (2.20)$$

From 2.12 , it follows :

$$D = \sqrt{2\ f\ L_P} \left(\sqrt{P_{O1}} + \sqrt{P_{O2}} \right) \Big/ V_P \qquad (2.21)$$

Which substituted into 2.20 yields :

$$f = \frac{2}{9\ L_P} \left\{ \frac{R_P}{V_P} \frac{\left(\sqrt{P_{O1}} + \sqrt{P_{O2}} \right)^3}{\sqrt{P_{O1}}\ \sqrt{P_{O2}}} + \left[\frac{I_{O1}\ R_{S1}}{\sqrt{P_{O2}}} \left(\frac{n_P}{n_{S1}} \right) + \frac{I_{O2}\ R_{S2}}{\sqrt{P_{O1}}} \left(\frac{n_P}{n_{S2}} \right) \right] \right\}^2$$

(2.22)

Notice that once specified V_{O1} , V_{O2} plus I_{O1} and I_{O2} , from 2.22 one obtains f and then , 2.21 yields the duty-cycle required.

III. CONTINUOUS MODE OPERATION

A. Case of neglectible parasite resistances : Derivation of basic equations

The fig. 3 shows the current waveforms, assuming parasite resistances small enough as the current ramps may be assumed approximately linear.

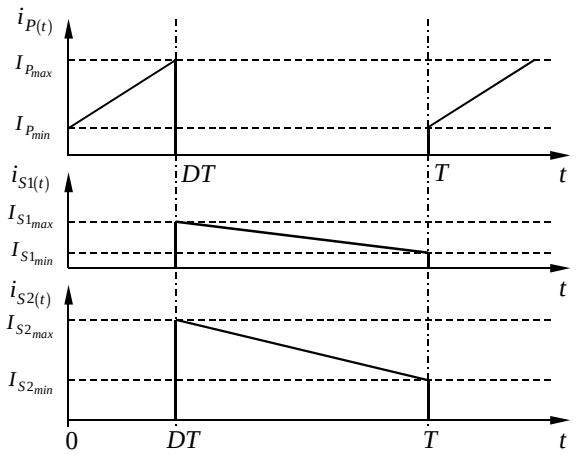

Fig. 3. Secondary current waveforms in continuous mode operation assumig low parasite resistances.

From the m.m.f. continuity , it must be :

$$n_P\ I_{P_{max}} = n_{S1}\ I_{S1_{max}} + n_{S2}\ I_{S2_{max}} \quad (3.1.a)$$

$$n_P\ I_{P_{min}} = n_{S1}\ I_{S1_{min}} + n_{S2}\ I_{S2_{min}} \quad (3.1.b)$$

The average primary and secondary currents are :

$$I_{P_{av}} = \frac{1}{2}\left(I_{P_{max}} + I_{P_{min}}\right) D \quad (3.2.a)$$

$$I_{O1} = \frac{1}{2}\left(I_{S1_{max}} + I_{S1_{min}}\right)(1-D) \quad (3.2.b)$$

$$I_{O2} = \frac{1}{2}\left(I_{S2_{max}} + I_{S2_{min}}\right)(1-D) \quad (3.2.c)$$

Defining : $\Delta I_P = I_{P_{max}} - I_{P_{min}}$ (3.3.a)

$$\delta i_P = \Delta I_P / I_{P_{max}} \quad (3.3.b)$$

it results : $\Delta I_P = \delta i_P\ I_{P_{max}}$ (3.4)

and similarly , it may be defined :

$$\Delta I_{S1} = \delta i_{S1}\ I_{S1_{max}} \quad (3.5.a)$$

$$\Delta I_{S2} = \delta i_{S2}\ I_{S2_{max}} \quad (3.5.b)$$

From 3.1.a , one obtains :

$$I_{P_{max}} = (n_{S1}/n_P)\, I_{S1_{max}} + (n_{S2}/n_P)\, I_{S2_{max}} \quad (3.6)$$

From 3.1.a and b , it results :

$$\Delta I_P = (n_{S1}/n_P)\, \Delta I_{S1} + (n_{S2}/n_P)\, \Delta I_{S2} \quad (3.7)$$

Substituting 3.4 , 3.5.a and b into 3.7 , yields :

$$I_{P_{max}} = \left(\frac{n_{S1}}{n_P}\right) I_{S1_{max}} \left(\frac{\delta i_{S1}}{\delta i_P}\right) + \left(\frac{n_{S2}}{n_P}\right) I_{S2_{max}} \left(\frac{\delta i_{S2}}{\delta i_P}\right) \quad (3.8)$$

Comparing 3.8 with 3.6 it follows :

$$\left(\frac{\delta i_{S1}}{\delta i_P}\right) = \left(\frac{\delta i_{S2}}{\delta i_P}\right) = 1 \text{ then, } \delta\ i_P = \delta i_{S1} = \delta i_{S2} \quad (3.9)$$

Applying the Faraday law on the primary :

$$V_P = L_P\ (\Delta I_P / D\,T) \quad (3.10)$$

from which : $\Delta I_P = D V_P / f\ L_P$ (3.11)

By the same procedure :

$V_{O1} = L_{S1}\ \Delta I_{S1} / [(1-D)\,T]$ which leads to ,

$$\Delta I_{S1} = (1-D) V_{O1} / (f\ L_{S1}) \quad (3.12.a)$$

$V_{O2} = L_{S2}\ \Delta I_{S2} / [(1-D)\,T]$ which leads to ,

$$\Delta I_{S2} = (1-D) V_{O2} / (f\ L_{S2}) \quad (3.12.b)$$

Relating 3.12.a and b , the ratio gives :

$$\Delta I_{S1} / \Delta I_{S2} = (V_{O1}/V_{O2})(L_{S2}/L_{S1}) \quad (3.13)$$

From the Faraday law: $\frac{V_{O1}}{V_{O2}} = \frac{n_{S1}}{n_{S2}}$ and from 2.8 :

$L_{S2}/L_{S1} = (n_{S2}/n_{S1})^2$, so $\Delta I_{S1}/\Delta I_{S2} = n_{S2}/n_{S1}$ (3.14)

thus leading to : $\Delta I_{S2} = (n_{S1}/n_{S2})\,\Delta I_{S1}$ which substituted in 3.7 yields: $\Delta I_{S1} = \frac{1}{2}(n_P/n_{S1})\,\Delta I_P$ (3.15.a)

and similarly : $\Delta I_{S2} = \frac{1}{2}(n_P/n_{S2})\,\Delta I_P$ (3.15.b)

Substituting 3.15.a into 3.12.a and then, using 2.8 :

$$V_{O1} = \frac{1}{2}\left(\frac{n_{S1}}{n_P}\right)\frac{L_P}{(1-D)T}\ \Delta I_P \quad (3.16)$$

Substituting ΔI_P from 3.10 into 3.16 :

$$V_{O1} = \frac{1}{2}\left(\frac{n_{S1}}{n_P}\right)\frac{D}{(1-D)}\ V_P \quad (3.17.a)$$

and similarly it results :

$$V_{O2} = \frac{1}{2}\left(\frac{n_{S2}}{n_P}\right)\frac{D}{(1-D)}\ V_P \quad (3.17.b)$$

B. Parasite resistance effects

From 2.2 , when $t = (1-D)T$ it results :

$$I_{S1_{min}} = \left(I_{S1_{max}} + \frac{V_{O1}}{R_{S1}}\right)\exp\left[-\frac{R_{S1}}{L_{S1}}(1-D)\,T\right] - \frac{V_{O1}}{R_{S1}} \quad (3.18)$$

as $I_{S1_{min}} = I_{S1_{max}} - \Delta I_{S1}$, if $(1-D)T << L_{S1}/R_{S1}$ one obtains the following approximative expression :

$$I_{S1_{max}} - \Delta I_{S1} = \left(I_{S1_{max}} + \frac{V_{O1}}{R_{S1}}\right)\left[1 - \frac{R_{S1}}{L_{S1}}(1-D)\,T\right] - \frac{V_{O1}}{R_{S1}} \quad (3.19)$$

which leads to: $V_{O1} = \frac{f\ L_{S1}}{(1-D)}\,\Delta I_{S1} - R_{S1}\ I_{S1_{max}}$ (3.20)

According to 3.11 and 3.15.a :

$$\Delta I_{S1} = \tfrac{1}{2}(n_P/n_{S1})\, V_P\ D\,T / L_P \quad (3.21)$$

Substituting 3.21 into 3.20 , and using 2.8 yields :

$$V_{O1} = \frac{1}{2}\left(\frac{n_{S1}}{n_P}\right)\frac{D}{(1-D)}V_P - R_{S1}\, I_{S1_{max}} \qquad (3.22)$$

The average secondary current equates the DC load current , so from fig. 3 :

$$I_{O1} = \left(I_{S1_{max}} - \frac{\Delta I_{S1}}{2}\right)(1-D) \qquad (3.23)$$

from which : $I_{S1_{max}} = I_{O1}\ \Delta I_{S1} / 2\,(1-D)$ (3.24)

Substituting 3.24 into 3.22 :

$$V_{O1} = \frac{1}{2}\left(\frac{n_{S1}}{n_P}\right)\frac{D}{(1-D)}\ V_P - \left[\frac{I_{O1}}{(1-D)} + \frac{\Delta I_{S1}}{2}\right]R_{S1} \qquad (3.25.a)$$

and by similar procedures :

$$V_{O2} = \frac{1}{2}\left(\frac{n_{S2}}{n_P}\right)\frac{D}{(1-D)}\ V_P - \left[\frac{I_{O2}}{(1-D)} + \frac{\Delta I_{S2}}{2}\right]R_{S2} \qquad (3.25.b)$$

On the other hand, according to 3.14 and 3.21 :

$$n_{S1}\ \Delta I_{S1} = n_{S2}\ \Delta I_{S2} = n_P\ V_P\ D/(2\ f\ L_P) \qquad (3.26)$$

If $\Delta I_P \to 0$ this implies $\Delta I_{S1} \to 0$ and $\Delta I_{S2} \to 0$ so , from 3.25.a and b , one obtains :

$$\frac{V_{O1}}{V_{O2}} = \left(\frac{n_{S1}}{n_{S2}}\right)\frac{1 - \dfrac{I_{O1}\ R_{S1}}{\left(\dfrac{n_{S1}}{n_P}\right)D\,V_P}}{1 - \dfrac{I_{O2}\ R_{S2}}{\left(\dfrac{n_{S2}}{n_P}\right)D\,V_P}} \qquad (3.27)$$

Given I_{O1} and specified V_{O1} and V_{O2} , D may be adjusted to obtain V_{O1} , but for a given I_{O2} , the output V_{O2} will become determined by I_{O2} and D above adopted. Therefore, the double independent regulation becomes impossible. To allow full independent regulation ΔI_P greater than zero is required to ensure $\Delta I_{S1} > 0$ and $\Delta I_{S2} > 0$. The bigger the current increments become, the easier the control results. These increments may be modified varying the switching frequency.

The current increments become more important in critical or discontinuous operating modes. Therefore, these modes should be adopted when double independent regulation is desired.

Moreover, the double converters are usually adopted to reduce the power supply volume, which becomes minimum if discontinuous mode operation is selected (because this mode reduces the flyback transformer volume).

IV. DOUBLE FLYBACK CONVERTER WITH MERGED SECONDARY WINDINGS

Assuming discontinuous mode operation and applying the Faraday law to the secondary circuits yields (see fig. 4) :

$$L_{S1}\ I_{S1_{max}} / t_{m1} = V_{O1} \qquad (4.1.a)$$

$$L_{S2}\ I_{S2_{max}} / t_{m2} = V_{O2} - V_{O1} \qquad (4.1.b)$$

The average output currents are :

$$I_{O2} = \frac{1}{2}\frac{t_{m2}}{T}\, I_{S2_{max}} \qquad (4.2.a)$$

$$I_{O1} = \frac{1}{2}\frac{t_{m1}}{T}\, I_{S1_{max}} - I_{O2} \qquad (4.2.b)$$

Finding t_{m1} and t_{m2} from 4.1.a and b , then substituting both intervals into 4.2.a and b to obtain $I_{S1_{max}}$ and $I_{S2_{max}}$ yields :

$$I_{S1_{max}} = \sqrt{2\,(I_{O1} + I_{O2})V_{O1} / \ f\ L_{S1}} \qquad (4.3.a)$$

$$I_{S2_{max}} = \sqrt{2\ I_{O2}(V_{O2} - V_{O1}) / \ f\ L_{S2}} \qquad (4.3.b)$$

The maximum values of the output currents are :

$$I_{O1_{max}} = I_{S1_{max}} - I_{S2_{max}} \qquad (4.4.a)$$

$$I_{O2_{max}} = I_{S2_{max}} \qquad (4.4.b)$$

Using 4.3.a , 4.3.b , 4.4.a and 4.4.b , one obtains :

$$\frac{I_{O1_{max}}}{I_{O2_{max}}} = \frac{I_{S1_{max}}}{I_{S2_{max}}} - 1 = \left(\frac{n_{S2}}{n_{S1}}\right)\sqrt{\frac{\dfrac{I_{O1}}{I_{O2}} + 1}{\dfrac{V_{O2}}{V_{O1}} - 1}} - 1 \qquad (4.5.a)$$

$$I_{O2_{max}} = \left(\frac{n_P}{n_{S2}}\right)\sqrt{\frac{2}{D}(V_{O2} - V_{O1})\, I_{P_{max}}\ I_{O2}} \qquad (4.5.b)$$

On the other hand, the converted power is : $P_P = D\ V_P\ I_{P_{max}} / 2$ (4.6)

and the total output power :

$$P_O = P_{O1} + P_{O2} = \eta\ P_P \qquad (4.7)$$

where, η is the converter efficiency.

Sustituting 4.7 into 4.6 yields :

$$I_{P_{max}} = 2\ P_O / (\eta\ D\,V_P) \qquad (4.8)$$

Applying the Faraday law on the primary circuit :

$$L_P = V_P\ D / (f\ I_{P_{max}}) \qquad (4.9)$$

while doing it on the secondary :

$$(V_{O2} - V_{O1}) / V_{O1} = n_{S2} / n_{S1} \qquad (4.10)$$

The boundary of the continuous operating mode is $t_{m2} = (1-D)T$, therefore, from 4.1.b :

$$(1-D)T = L_{S2}\ I_{S2_{max}} / (V_{O2} - V_{O1}) \qquad (4.11)$$

Substituting 4.2.a into 4.11 , and using 2.8 , one obtains :

$$\frac{n_{S2}}{n_P} = (1-D) / \sqrt{2\ f\ L_P\,(V_{O2} - V_{O1})\, I_{O2}} \qquad (4.12)$$

Using the primary power and the switching frequency, the core may be adopted [7]-[9]. With the inductance L_P , given by 4.9 , the air-gap may be calculated and then, using $I_{P_{max}}$ the primary turns n_P may be determined [1][2][5][8] . Next , n_{S2} may be obtained from 4.12 and n_{S1} from 4.10 . Then , $I_{O2_{max}}$ may be calculated through 4.5.b and $I_{O1_{max}}$ may be found from 4.5.a .

In order to adopt the power devices , maximum voltage calculations are mandatory.

The maximum voltage over the transistor is :

$$V_{DS_{max}} = V_P + \left(n_P / n_{S1}\right) V_{O1} \qquad (4.13)$$

The maximum reverse voltage over D_{FB1} will be :

$$V_{DFB1_{max}} = V_{O1} + \left(n_{S1} / n_P\right) V_P \qquad (4.14.a)$$

and the voltage stress over D_{FB2} is :

$$V_{DFB2_{max}} = V_{O2} + V_P \left(n_{S1} + n_{S2}\right) / n_P \qquad (4.14.b)$$

Utilizing the peak currents calculated above and the maximum voltages obtained, the power devices may be adopted.

V. EXPERIMENTAL RESULTS

The power stage of the experimental circuit is depicted in fig. 4 .

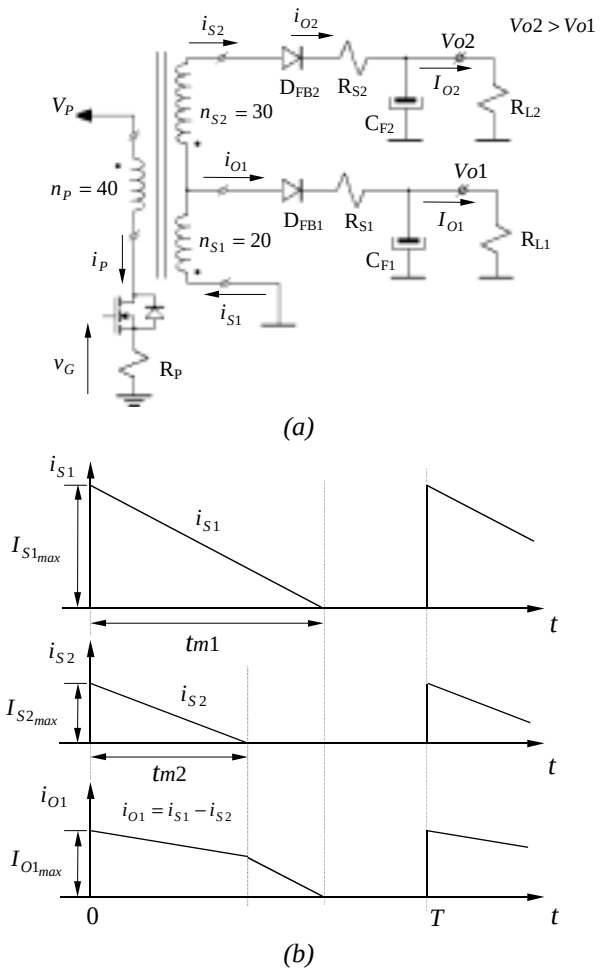

Fig. 4. Double flyback converter with merged secondary windings , *(a)* electrical circuit, *(b)* secondary current waveforms.

The control circuit [6] (block diagram in fig. 5) compares the output voltages with the reference values through operational amplifiers whose output signals are optocoupled to the PWM controller. In such a way, both the duty-cycle and the switching frequency may be varied to control the supply output voltages.

Each control loop action becomes a disturbance for the other one, which reacts attempting to compensate its effects. Both loops interacting analogically solve the equation system, finding the pair of values (D , f) which allow setting both output voltages to the desired values.

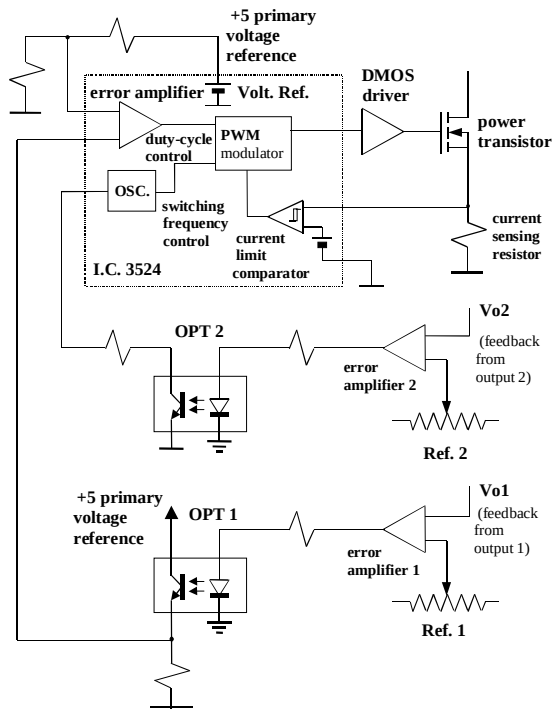

Fig. 5. Control unit block-diagram.

The fig. 6 lets compare the output current from the lowest voltage semiconverter (V_{O1}) versus the gate signal of the power transistor. Notice that the operating mode is discontinuous, having a dead time (without secondary current) between the D_{FB1} blocking and the transistor switch-on.

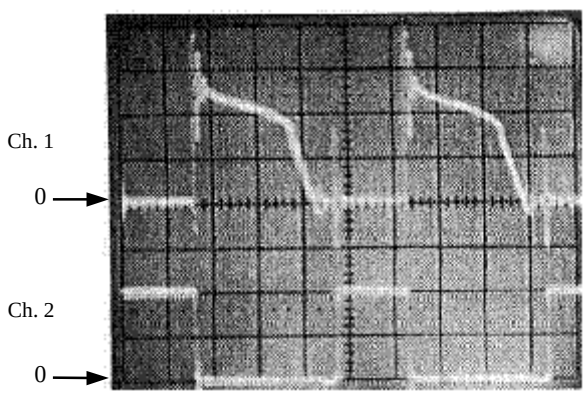

Fig. 6. Current from semiconverter suppling Vo1 versus gate signal of the power transistor (Channel 1 , I_{O1} : 454 mA/div ; Channel 2 , V_G : 10 V/div ; T : 10 µs/div ; V_P = 24 V ; Vo1 = 5 V , Ro1 = 10 Ω , I_{O1} = 0.5 A ; Vo2 = 15 V , Ro2 = 60 Ω , I_{O2} = 0.25 A)

At the fig. 7 the output current waveforms presented may be checked against the ones theoretically envisaged, verifying a good agreement. The ratio between the maximum experimental values agree with 4.5.a . Also, from fig. 7 it may be calculated $D \cong 0.34$,

then $I_{P\,max}$ may be obtained and next , 4.5.b can be verified.

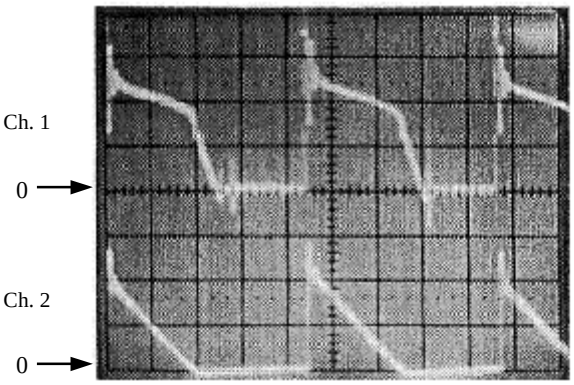

Fig. 7. Semiconverter output currents (Channel 1 , I_{O1} : 454 mA/div ; Channel 2 , I_{O2} : 500 mA/div ; T : 10 μs/div ; V_P = 24 V ; Vo1 = 5 V , Ro1 = 10 Ω , I_{O1} = 0.5 A ; Vo2 = 15 V , Ro2 = 60 Ω , I_{O2} = 0.25 A)

The oscillogram 8 shows the operation with V_{O1} set to a voltage level lower enough than the nominal output voltage to force the respective semiconverter entering in continuous mode operation. Notice that this modification on the low voltage supply waveforms do not change the waveforms of the other semiconverter which still operates in discontinuous mode. Therefore, the double independent regulation is still possible.

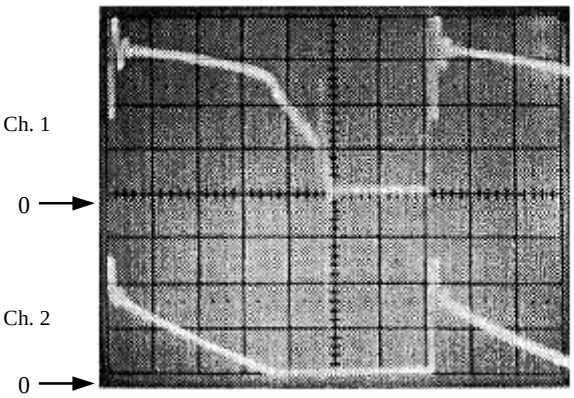

Fig. 8. Output currents with the lowest voltage (Vo1) semiconverter entering into the continuous operating mode (Channel 1 , I_{O1} : 454 mA/div ; Channel 2 , I_{O2} : 500 mA/div ; T : 5 μs/div ; V_P = 24 V ; Vo1 = 4 V , Ro1 = 5 Ω , I_{O1} = 0.8 A ; Vo2 = 13 V , Ro2 = 60 Ω , I_{O2} = 0.22 A)

VI. CONCLUSIONS

The proposed method allows improving the voltage regulation of double flyback converters in fixed output voltage supplies submitted to wide variable load operation. Even if it is better applied in discontinuous operating mode, the double regulation is still feasible entering in continuous mode operation at nominal load.

The control circuit is simple, requiring only a single PWM I.C. regulator (i.e. 3524), whose duty-cycle and switching frequency are controlled through optocoupled operational amplifiers which sense the output voltages.

REFERENCES

[1] M. Brown, *"Practical Switching Power Supply Design"*, S. Diego CA : Academic Press, 1990 , (Chap. 6 : "The magnetic components within a switching power supply", p. 67 ; Chap. 7 : "Cross-regulation of the outputs", p. 97).

[2] K. Billings, *"Switchmode Power Supply Handbook"*, N.Y. : Mc Graw-Hill, 1989, (Part II , Chap. 1 : "Multiple-output flyback switchmode power supplies", p. 2-3 ; Chap. 2 : "Flyback transformer design", p. 2-16 ; Chap. 18 : "Multiple-output compound regulating systems", p. 2-141).

[3] Q. Chen , F. C. Lee and M. M. Jovanovic , "Small-signal analysis and design of weighted voltage control for a multiple-output forward converter", *IEEE Transactions on Power Electronics* , vol. 10 , no. 5 , p. 589 , Sept. 1995 .

[4] J. Sebastián and J. Uceda , "The double converter : A fully regulated two-output DC-DC converter", *IEEE Transactions on Power Electronics* , vol. PE-2 , no. 3, p. 239, July 1987.

[5] H. Tacca , *Convertidores asimétricos con doble transferencia directa e indirecta* , Tesis doctoral, Universidad de Buenos Aires, Facultad de Ingeniería, abril , 1998.

[6] H. Tacca , "Single-Switch Two-Output Flyback-Forward Converter Operation", *IEEE Transactions on Power Electronics* , vol. 13 , no. 5 , p. 903 , Sept. 1998 .

[7] Siemens, *Ferrites and Accesories. Data Book 90/91* , Berlin, Germany : Siemens Matsushita Components, 1990.

[8] C. W. T. McLyman, *Transformer and Inductor Design Handbook* N. Y. U.S.A. : M. Dekker, 1988.

[9] C. W. T. McLyman, *Magnetic Core Selection for Transformer and Inductors* , N. Y. U.S.A. : M. Dekker, 1997.