Recent Developments of High Power Converters for Industry and Traction Applications

S. Bernet
ABB Corporate Research
P.O. Box 101332
69003 Heidelberg
Germany
Email: steffen.bernet@decrc.abb.de

***Abstract* - The introduction of new high power devices like IGCTs and high voltage IGBTs accelerates the broad use of PWM voltage source converters in industrial and traction applications. This paper summarizes the state-of-the-art of power semiconductors. The characteristics of Integrated Gate Commutated Thyristors (IGCTs) and high voltage IGBTs are described in detail. Both the design and loss simulations of a two level 1.14 MVA Voltage Source Inverter and a 6 MVA three-level neutral point clamped Voltage Source Converter with active front end enable a detailed comparison of both power semiconductors for high power PWM converters. The design and the characteristics of a commercially available IGCT neutral point clamped PWM voltage source converter for medium voltage drives are discussed. Recent developments and trends of traction converters at dc mains and ac mains are summarized.**

I. INTRODUCTION

The development of new high power semiconductors such as 3.3kV, 4.5kV and 6.5kV Insulated Gate Bipolar Transistors (IGBTs) and 4.5kV to 5.5kV Integrated Gate Commutated Thyristors (IGCTs), improved converter designs and the broad introduction of three-level topologies have led to a drastic increase of the market share of PWM controlled Voltage Source Converters (VSC). Meanwhile these converters, ranging from 0.5 MVA to 10 MVA, are becoming price competitive against conventional three-phase rectifiers and cycloconverters on the basis of thyristors since reduced line harmonics, a better power factor, substantially smaller filters and a higher system efficiency enable a cost reduction of the system in many applications like for instance rolling mills, marine and mining applications, electrolysis and high voltage DC transmission. Despite a price reduction of Gate Turn Off thyristors (GTOs) by a factor of two to three over the last five years, also conventional GTO Voltage Source Converters and Current Source Converters (CSC) are increasingly replaced by PWM Voltage Source Converters with IGCTs or IGBTs in traction and industry applications.

Starting with a summary of the state of the art and trends of power semiconductors, this paper compares IGCTs and high voltage IGBTs for high power applications, since there are almost no publications about this important subject which determines fundamentally the design and the performance as well as the investment and operating costs of high power converters for different applications. Specific device characteristics are derived on the basis of a description of the fundamental function and structure of both high power switches. The design and simulation of a 1.14 MVA two-level PWM Voltage Source Inverter (VSI) and a 6 MVA three-level voltage source converter with active front end applying (3300V,1200A) IGBT modules and 4.5kV IGCTs enable a detailed comparison and evaluation of both switches. The active silicon area, semiconductor losses, the complexity of the gate drives, protection, and reliability issues are addressed. Design issues and characteristics of a recently introduced PWM medium voltage converter family are discussed. A consideration of recent developments of traction converters at dc and ac mains completes the paper.

II. RECENT DEVELOPMENT OF POWER SEMICONDUCTORS

A. State-of-the-Art and Trends

Fig. 1 and Fig. 2 summarize the most important power semiconductors on the market and their rated voltages and currents today. Up to now silicon is clearly the dominating semiconductor material. According to the device structures silicon semiconductors can be distinguished in diodes, transistors and thyristors. The diodes can be classified in Schottky diodes, epitaxial and double diffused pin diodes (Fig. 1). While Schottky diodes dominate at low voltages (V_{br}≤100V) and high switching frequencies, the fast switching epitaxial (V_{br}≤600-1200V) and double diffused pin diodes (V_{br}≥1000V) are applied at higher voltages.

MOSFETs and IGBTs have replaced Bipolar Junction Transistors almost completely. Considering MOSFETs a remarkable development took place during the last two years. While the introduction of the so-called S-FET technology in 1996 enables very low on-state resistances in the low voltage range (V_{br}<100V; e.g. R_{DSon}<6mΩ @ V_{DS}=30V), the development of the so called Cool-MOS in 1998 enables a reduction of the on-state resistance R_{DSon} by a factor of 5 to 10 compared to conventional vertical MOSFETs for the same chip area in a voltage range of V_{br}=600V-1000V (Fig. 1). The introduction of vertical p-strips in the drift region and the resulting extension of the space charge region also in horizontal direction allows a distinct reduction of the device thickness and therefore

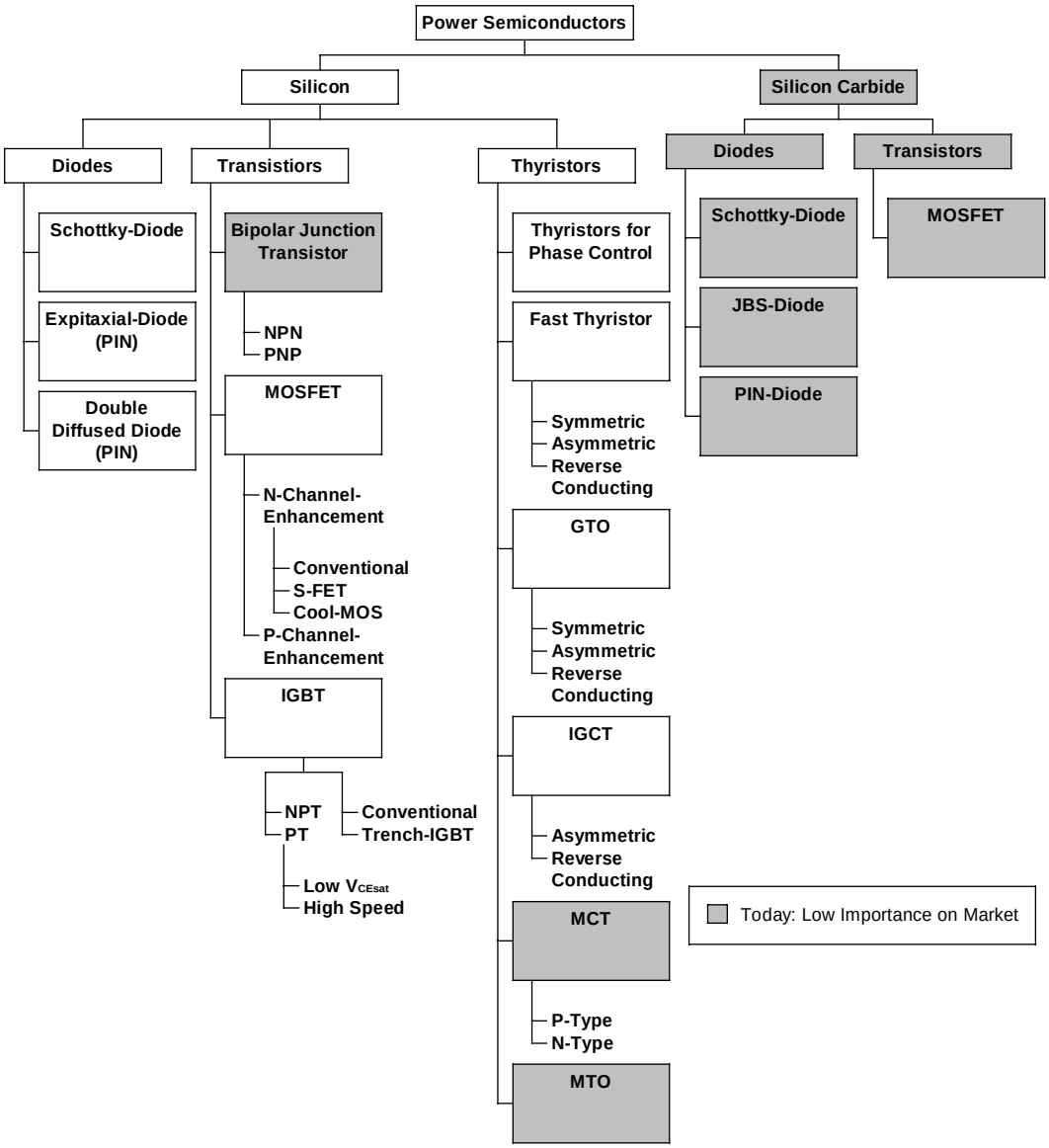

Fig. 1 Classification of state-of-the-art power semiconductors

reduced on-state and switching losses and a lower gate drive power of Cool-MOS. The area related maximum permissible avalanche energy, ruggedness and reliability of the device are retained [2]. Nowadays MOSFETs are available up to a maximum switch power ($S_S=V_S*I_S$; V_S: rated switch voltage; I_S: rated switch current) of S_S= 0.1 MVA.

IGBTs have gained more and more importance since their introduction on the market in 1988. Today there are 600V, 1200V, 1700V, 2500V and 3300V IGBTs up to currents of 2400A on the market (Fig. 2). Samples of 4500V IGBTs are currently tested in the laboraties of several device and converter manufacturers. Recently Eupec announced the introduction of 6500V IGBTs for currents of 200A, 400A and 600A. Samples of 6500V IGBT modules will be available in the year 2000.

According to the device structure Punch Through (PT) and Non Punch Through (NPT) structures can be distinguished (Fig. 1). Both types of IGBTs are offered on the market up to a voltage of V_{br}=3300V. However, there is a clear trend towards NPT IGBTs which are inherently more rugged in the short circuit failure mode, more simple to parallel due to a positive temperature coefficient of the collector-emitter saturation voltage and less expensive to manufacture.

Thyristors for phase control, fast thyristors, Gate Turn Off thyristors (GTOs) and Integrated Gate Commutated Thyristors (IGCTs) have a latching structure where charge carriers are injected from anode and cathode. Conventional thyristors, which can not be turned off actively, are very mature and no major innovation steps are expected. Recently an improvement of the existing technology was realized by the introduction of the Bidirectional Control Thyristor (BCT) which consists of two antiparallel thyristors on one waver with two independent gates enabling substantial savings in clamping, infrastructure and mechanics of high power converters [1]. Also the development of a 4 inch 7.5 kV light triggered thyristor with integrated overvoltage protection simplifies the gate control

substantially and increases the reliability of thyristors in high power, high voltage applications like for instance high voltage dc transmission [3].

Conventional GTOs are the mostly used gate controlled semiconductors at high voltages (i.e. V_{BR}≥3300V) and high power (i.e. S≥0.5 MVA) in traction and industrial converters today. Several manufacturers offer GTOs up to a rated switch power of 36 MVA (6000V, 6000A) on the market (Fig. 2).

The trade off between conduction, turn-on, and turn-off behavior of conventional GTOs leads to typical turn-off gains between 3 and 5. The inhomogeneous turn-off transient caused by the constriction of the turn-off current towards the center of the cathode islands limits the turn-off dv/dt to about 500-1000V/µs requiring bulky and expensive snubber circuits [1], [7]. The rather complex gate drive as well as the relatively high power required to control the GTO are other substantial disadvantages. However, the high on-state current density, the high blocking voltages, the high off-state dv/dt withstand capability, and the possibility to integrate an inverse diode are considerable advantages of these devices.

Substantial improvements of the conventional GTO structure, the gate drive, the packaging, and the integrated inverse diode as well as the change of the turn-off process resulted in a drastically improved GTO which is considered as a new component - the IGCT. 4.5kV (1.9kV/2.7kV dc-link) and 5.5kV (3.3kV dc-link) IGCTs with currents of 275A≤I_{tgqm}≤4000A have been developed (Fig. 2). The introduction of a 6kV/6kA IGCT on the market was announced for 1999. An extension of the blocking voltage of IGCTs and inverse diodes to 10kV is technically possible. Thus the development of 10kV IGCTs depends basically on the market volume for these devices. Electroactive passivation will substantially increase the maximum junction temperatures of IGCTs in the near future [1].

Compared to GTOs both IGCTs and IGBTs have the potential to decrease the costs and to increase the power density as well as the performance of high power converters because of snubberless operation at higher switching frequencies (e.g. f_s=500-1000Hz).

Various new concepts of MOS controlled thyristors like e.g. the MOS Controlled Thyristor (MCT) and the MOS Turn Off Thyristor (MTO) have been proposed. However, at the moment the importance of these devices on the market is very low.

Marvelous physical properties of the material Silicon Carbide (SiC) like a wide energy gap (Si: 1.12eV; 4H-SiC: 3.26eV), a high breakdown electric field (Si: $2.5*10^5$V/cm; 4H-SiC: $2.2*10^6$V/cm for 1000V operation), a high thermal conductivity (Si: 1.5 W/cm; 4H-SiC: 4.9 W/cm at 25°C), a high saturated electron drift velocity (Si: $1.0*10^7$cm/s; 4H-SiC: $2.0*10^7$cm/s for E≥$2.0*10^5$ V/cm), high inertness to chemical reaction and the high pressure and radiation resistance are the reason, that SiC will be a future material for power semiconductors enabling a drastic reduction of on-state and switching losses and an operation at junction

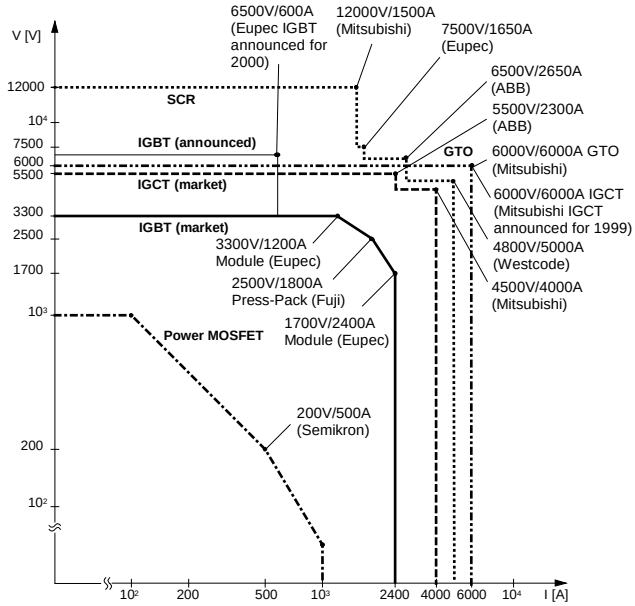

Fig. 2 Power range of commercially available power semiconductors

temperatures up to T_j=600°C. SiC based Schottky and Junction Barrier Schottky (JBS) diodes have been built and tested for blocking voltages up to 2000V. Pin diodes have been realized up to 5kV. Due to extremely low reverse recovery currents even at high di/dt's and high commutation voltages, SiC diodes allow a drastic reduction of the diode turn-off losses and the turn-on losses of hard switching IGBTs and MOSFETs. At the moment the defect density of SiC wafers is the limiting factor for high power devices. However, it seems to be feasible to have prototypes of IGBT modules with SiC inverse diodes before the end of the year 1999 [1].

III. CHARACTERIZATION OF HIGH VOLTAGE IGBTS AND IGCTS

Both IGBTs and IGCTs have the potential to replace GTOs since both switches allow substantial cost savings due to snubberless operation. To enable a comparison of IGCTs and high voltage IGBTs (V_{CE}≥3300V) specific device characteristics are derived on the basis of a description of the fundamental function and structure of a (3300V, 1200A) IGBT module and reverse conducting 4.5kV IGCTs.

A. High Voltage IGBTs

1.) Package and Design: All high power IGBTs consist of many parallel chips due to the applied „MOS technology“. Today the maximum chip size of IGBTs is limited to 4.6 cm^2 [12].

There are basically two types of packages for 3.3kV, 4.5kV and 6.5kV IGBTs - the module package and the press pack.

In a module each chip is covered by a very thin (about 5µm) aluminum metallization.

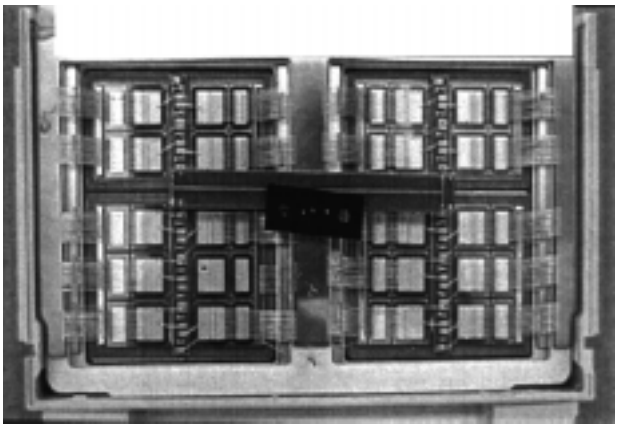

Fig. 3 Physical arrangement of a (4500V, 1000A)-IGBT module

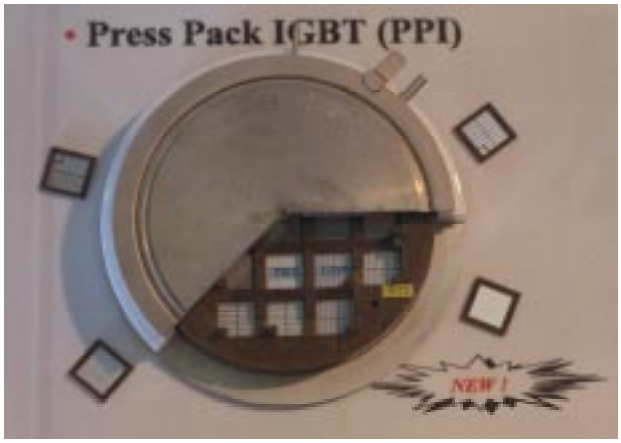

Fig. 4 Physical arrangement of an IGBT press pack

The connections of the IGBT and diode chips are realized by aluminum wires which are bonded to the chip metallization by ultrasonic soldering [20]. As an example 450 wires with 900 wedge bonds are required in a (3300V, 1200A)-IGBT module. To protect the wire bond soldering the plastic box of the module is filled with silicon gel. A recently introduced special coating of bond wires is used to improve the durability of bond wires in power cycling tests. The IGBT and the diode chips are soldered on a Direct Copper Bonding (DCB) substrate consisting of a ceramic layer of AlN (which provides the internal insulation) and two copper layers (one at each side). The insulating substrate is softly soldered on a copper or AlSiC base plate. Fig. 3 shows the basic structure of a (4500V, 1000A) IGBT module as an example.

The main advantages of the module package are the full insulation of the base plate which enables a simple cooling and the low packaging costs. The poor power cycling capability, the undefined failure mode after short circuits which can not be turned off (open or shorted terminals) and the possible explosion of IGBT modules during the failure mode are important drawbacks.

To overcome these disadvantages press pack IGBTs have been developed recently by Fuji and Toshiba (Fig. 4). Only press contacts are used for the current and heat flow through the press pack device. The fact, that the press pack behaves as short circuit after IGBT and/or diode chips were destroyed in the failure mode enables the use of these switches in applications with a redundant series connection of (N+1) or (N+2) devices in stacks. With a redundant (N+1) or (N+2) design the converter can continue operation if one device fails (is shorted). Since the replacement of the destroyed devices can be realized during planned system services the availability of the converter is not affected by one or two device failures in a redundant design. The avoidance of explosions during the failure mode and the possible increase of the reliability are other substantial advantages of press packs. The distinctly increased costs and the required insulation of switch and cooling are disadvantageous.

2.) On-state Behavior: High voltage IGBTs realize acceptable current densities due to the bipolar injection of charge carriers. The conductivity modulation of IGBTs can be adjusted by the p-emitter efficiency and lifetime control. The plasma distribution of up to date (3300V, 1200A) IGBTs leads to substantially higher on-state losses compared to latching devices. However, the introduction of vertically optimized device structures has a substantial potential to improve the plasma distribution and to decrease the waver thickness enabling significantly reduced on-state voltages and switching losses of future IGBTs.

3.) Switching Behavior: In Fig. 5 the snubberless turn-on transient of a (3300V, 1200A) IGBT module in a Voltage Source Inverter at a dc-link voltage of V_{dc}=2250A and a load current of I_o=1050A is depicted. The entire turn-on transient takes about 1.2µs. Since hard turn-on transients are basically determined by the turn-on transient of the IGBT internal MOSFET the occurring switching times, the di/dt´s, and the dv/dt´s can be adjusted by the gate drive. The maximum rate of current rise di_C/dt is limited by the Safe Operating Area (SOA) of the inverse diode which describes the maximum peak reverse recovery current as a function of the reverse blocking voltage of the diode [16]. Therefore the minimum gate resistances for turn-on transients depends essentially on the dc-link voltage and the stray inductances of the circuit.

Fig. 6 shows the measured snubberless turn-off transient of the (3300V, 1200A)-IGBT module. The small tail current is a typical characteristic of NPT-IGBTs. The gate drive realizes a turn-off current fall of di_C/dt=2800A/µs and a rate of voltage rise of dv_{CE}/dt=3500V/µs. The turn-off transient takes about 5µs. The occurring dv_{CE}/dt as well as the resulting turn-off losses can be adjusted in a wide range by the gate drive.

4.) Protection: The IGBT is able to limit its maximum collector current which depends on the gate emitter voltage and the junction temperature. As an example for a (3300V, 1200A)-IGBT module a gate voltage of 15V limits the current to about three times the nominal current. If a short circuit appears the IGBT has to be turned off within 10µs from the active region.

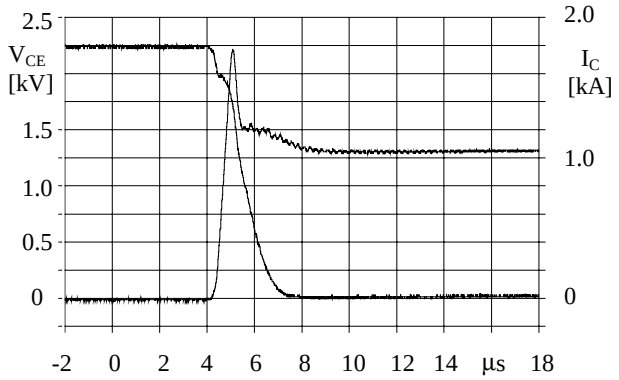

Fig. 5 Measured hard turn-on transient of a (3300V, 1200A)-IGBT module (FZ1200R33KF1; V_{dc}=2.25kV; I_o=1.05kA; T_j=25°C)

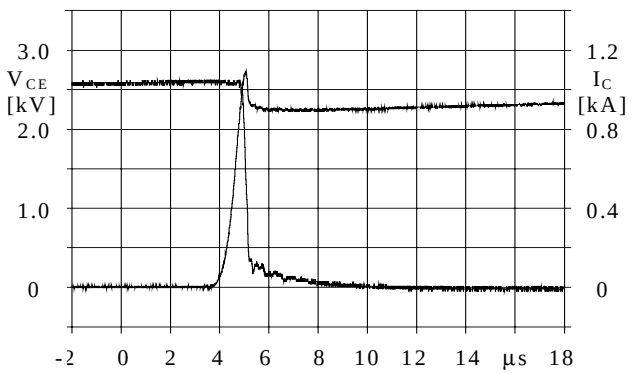

Fig. 6 Measured hard turn-off transient of a (3300V, 1200A)-IGBT module (V_{dc}=2.25kV; I_o=1.05kA; T_j=25°C)

5.) Failure Mode: If a short circuit current can not be turned off, an IGBT module will be destroyed by the occurring large overcurrent caused by the fast discharge of the dc-link capacitor in a hard switching VSI. After the destruction (explosion) the state of the module is not exactly defined but most probably the module acts like two open terminals. In contrast an IGBT press pack acts as a short circuit in the failure mode.

6.) Gate Drive: Besides the recharge of the input capacitance of the IGBT during turn-on and turn-off transients the control of di_C/dt and dv_{CE}/dt during the switching transients, the supply under voltage protection, the adjustment of switching times and protection thresholds, as well as the generation of error signals require sophisticated gate drives with a substantial part count of analog and digital electronic devices.

7.) Reliability: In IGBT modules the thermo - mechanical stress of both wire bonds and solder between DCB substrate and base plate are critical issues. While the fatigue of the wire connections leads to a lift-off of wire bonds and thus to increased on state voltages, the degradation of the internal thermal contacts caused by the thermo - mechanical stress of the solder between substrate and base plate and the migration of the thermal contact grease lead to an inhomogeneous increased thermal resistance of the module after thermal cycling. To increase the thermal cycling capability the copper base plate will be replaced by an AlSiC base plate in IGBT modules. When using AlSiC as base material the stresses of the solder interface are reduced significantly due to a substantially reduced coefficient of thermal expansion. In comparison to copper base plates the use of AlSiC base plates in a (3300V, 1200A) Eupec IGBT module enables the increase of the thermal cycling capability from 3000 to 15000 cycles at ΔT_C=80K and a reduction of the weight by about 30%. Furthermore protective bond coatings are increasingly applied in IGBT modules to improve the thermal cycling capability of bond wires.

B. Integrated Gate Commutated Thyristors

1.) Package and Design: IGCTs are only offered in press packs. The key idea of the IGCT is the hybridization of an improved GTO structure and an extremely low inductive gate drive. In contrast to high voltage IGBTs and its many parts (e.g. 60 chips + 450 bond wires for a 3300V, 1200A IGBT module) Gate Commutated Thyristors (GCT) consist of only a few mechanical parts (Fig. 7):

- the silicon waver which is divided in a GCT part and a diode part for reverse conducting IGCTs
- the gate ring which permits a low inductive contact from the gate terminal to the gate segments on the waver
- the molybdenum plates
- the copper cases of anode and cathode
- the gate ring terminal and
- the gate unit with plate conductors having a total stray inductance of 2-3 nH.

Fig. 8 shows one example of a GCT with integrated gate drive (IGCT). The distance of 15 cm between gate driver and GCT guarantees that this arrangement will fit into different types of stacks.

A substantial improvement of the GCT has been achieved recently by the introduction of a buffer layer at the anode side. Buffer layer power semiconductors generate distinctly fewer on-state losses and switching losses than conventional NPT elements due to their up to 30% reduced device thickness for the same forward breakdown voltage [9], [7]. In the new IGCTs the buffer layer is combined with a transparent anode which is basically a pn-junction with current dependent emitter efficiency. Trigger current and on-state gate current (or back porch current) are very small since the emitter efficiency of the transparent anode is high at low current. On the other hand electrons can be extracted as efficiently as through conventional anode shorts during turn-off because the transparent emitter is designed for low injection efficiency at high current density in the latching state [9].

In the past the advantages of monolithic NPT-GTO and diode combinations were always diminished by the fact that the NPT-GTO required a thicker silicon chip than its corresponding free wheeling diode. Thus reverse conducting GTO devices suffered from excessive diode losses.

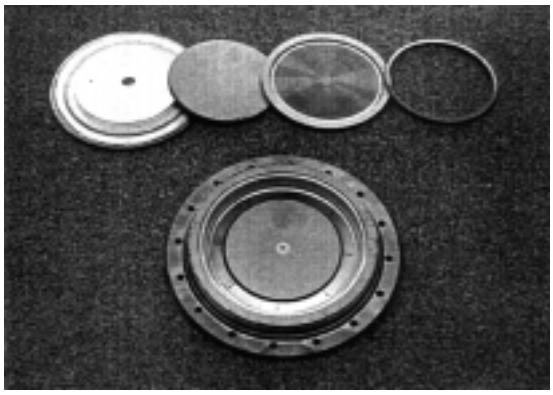

Fig. 7 Mechanical parts of a Gate Commutated Thyristor (GCT)

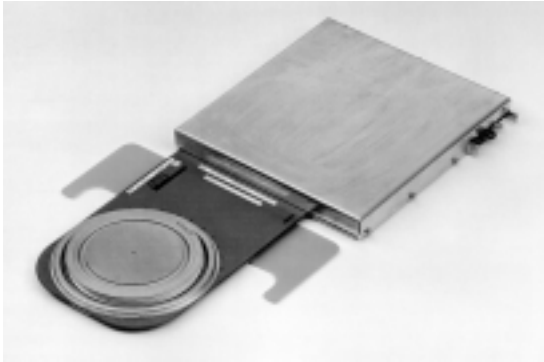

Fig. 8 Physical arrangement of an Integrated Gate Commutated Thyristor

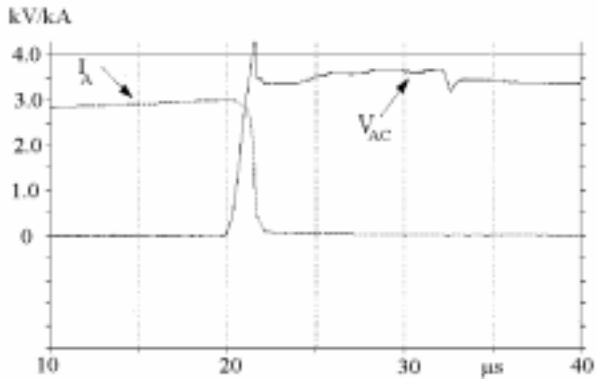

Fig. 9 Hard turn-off transient of a (4500V, 3000A)-IGCT (V_{dc}=3.5kV; I_o=3kA; T_j=125°C, t_s=1.6µs)

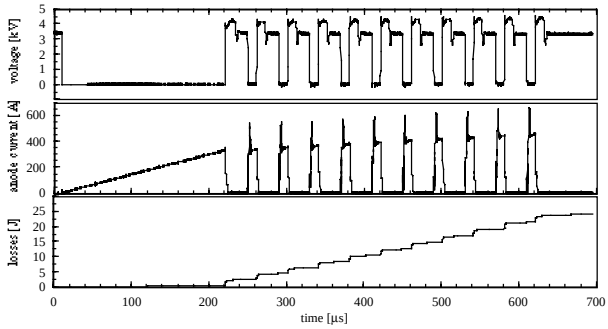

Fig. 10 25 kHz, 10-pulse test with a (5500V, 520A) IGCT 5SGX 06F6004 ($V_{dc\text{-}link}$= 3.3kV, T_j (t = 0) = 80°C, L_r = 17µH, Load = 2mH/50 mΩ, t_{on} = 10 µs, t_{off} = 30 µs)

However, in the new buffer layer concept the minimum thickness of a PT-GCT and of the inverse diode are essentially the same which makes the monolithic GCT/inverse diode configuration very attractive [9].

2.) On-state Behavior: Compared to currently available 3.3kV and 4.5kV IGBTs, IGCTs have the important advantage of substantially lower on-state voltages in the same voltage class. Due to two injecting emitters GCTs enable high current densities (second only to thyristors) at low on-state voltages even at high blocking voltages due to the latching state of the thyristor structure and a basically optimum symmetric plasma distribution.

3.) Switching Behavior: The active turn-on transient of the IGCT at inductive loads is improved by the low inductance gate drive as well. The fast impression of the positive gate current leads to a more homogenous turn-on transient. In experiments no inhomogeneties have been observed at a rate of current rise of $di_A/dt \geq 3000A/\mu s$ [8]. However, to keep the turning off diode within its safe operating area, the di/dt must be limited during the turn-on transient of the IGCT. Due to the latching during the turn-on transient, the IGCT can not provide di_A/dt (or dv_{AC}/dt) control. Instead, a small concentrated turn-on snubber consisting of an inductor, a free wheeling diode, a resistor and a clamp capacitor is necessary to limit the di/dt of the turning off diodes (Fig. 12). Additionally the di/dt clamp circuit relieves the turn-on transient of the IGCTs and transfers losses to the clamp resistor which accepts higher temperatures and requires less cooling infrastructure than semiconductors.

Fig. 9 shows the measured hard turn-off transient of a (4.5kV, 3kA) IGCT. Using a gate voltage of V_{GK}=-20V during the turn-off transient, the negative gate current rises with $\left|di_{gn}/dt\right| \geq 3kA/\mu s$ thereby commutating the complete cathode current to the gate before the main GTO blocking junction takes over voltage. Thus the GTO changes from its pnpn latching state to the rugged transistor pnp mode within 1µs enlarging the SOA to full dynamic avalanche. Therefore the IGCT does not require any turn-off snubbers. If the load is purely inductive the anode current remains unchanged until the IGCT voltage reaches the dc-link voltage. The main part of the losses generated during the rise of the anode voltage is only determined by the rate of voltage rise. As soon as the dc-link voltage is reached, the current commutates into the clamp. The occurring IGCT tail current is short due to the buffer layer technology. The hard gate drive causes a storage time of about 1.6µs in the investigated operating point. In contrast to conventional GTOs, where a fairly long minimum time between consecutive turn-off transients is defined to return to a uniform junction temperature, the homogenous turn-off transient of IGCTs overcomes this drawback. Therefore only the thermal impedance limits the maximum switching frequency of IGCTs. As an example Fig. 10 presents a test pulse pattern where an IGCT is stressed with ten 25kHz pulses (10µs on, 30µs off).

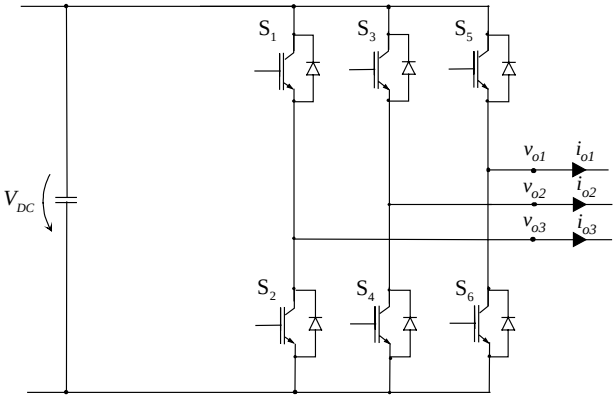

Fig. 11 Circuit configuration of a two-level IGBT inverter

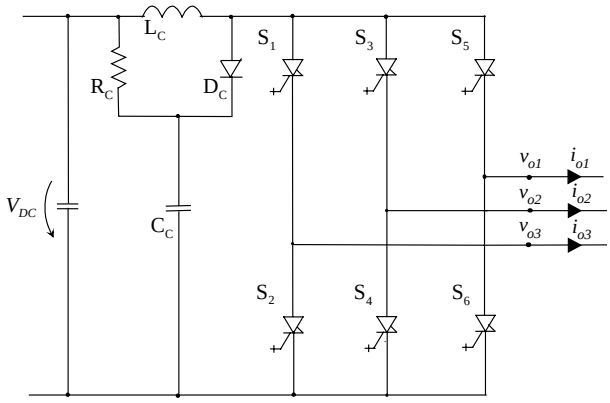

Fig. 12 Circuit configuration of a two-level IGCT inverter

4.) Protection: The output short circuit protection profits directly from the fast switching of IGCTs. If the di/dt of an external short circuit current is limited by a filter or a cable inductance the IGCTs can turn off before the maximum turn-off current of the semiconductors is reached [8].

In the case of an internal shoot through the di/dt clamp of the inverter limits the maximum peak current. Of course protection firing of all elements is possible in order to reduce the stress of the defect phase. A shoot through will safely discharge the dc-link since the IGCTs will safely short circuit under all worst case failure conditions.

5.) Failure Mode: If an IGCT is destroyed, the press pack acts as a short circuit. This is especially advantageous in converters with series connected devices in a redundant design (e.g. (n+1)).

6.) Gate Drive: The IGCT gate drive delivers the required gate current for the switching transients and the on-state. Despite the increase of the amplitude of the gate current I_{gqrm} the gate turn-off charge Q_{gq} is reduced to about 40% of that of a conventional GTO since the storage charge is decreased by a factor of 1/15. This and the 90% reduction of the on-state gate current leads to a 50% reduction of the gate drive power in comparison to a GTO. The required gate drive power of a (4500V, 1500A) IGCT is about 5 times the gate drive power of the (3300V, 1200A) IGBT module in a 1.14 MVA PWM inverter operating at a switching frequency of 500Hz. The fast switching transients of the IGCTs do not require a control of the switching times on the gate drive itself. It is interesting to note that the part count of the IGCT gate drives is only slightly higher than that of a standard IGBT gate drive.

7.) Reliability: Due to a low total part count and proven technology of GTO press packs a high reliability is guaranteed. A number of qualification tests, field experience on reliability of key components (up to 400 million device operations hours), and recent data from a 100 MVA railway inertie indicate a Failure in Time (FIT) of a full 3 MVA inverter of FIT≤2300 where 1 FIT= 1 Failure in one billion hours. The contribution of the gate drivers is not significantly larger than with standard 600V-1200V IGBT inverters, since fiber optics and logic units are similar, and the power devices including the pulse capacitors behave extremely well.

IV. COMPARISON OF HIGH VOLTAGE IGBTS AND IGCTS IN HIGH POWER CONVERTRS

A. Two-Level PWM Voltage Source Inverter

To compare IGCTs and IGBTs in a two-level PWM-VSI the lower part of the power range of IGCT converters was chosen. The considered inverter (V_{dc}=1500V, V_{1l}=1100V, I_o=600A, S=1.14 MVA) features sinusoidal modulation with added third harmonics. The IGBT inverter was assumed to operate totally snubberless to achieve a minimum part count (Fig. 11). In contrast to that a small di/dt clamp was assumed in the IGCT inverter to limit the rate of current rise to about di_A/dt=800A/µs (Fig. 12).

The following devices were chosen: IGBT-Module: FZ1200R33KF1 (V_{CES}=3300V, I_C=1200A) [19], reverse conducting IGCTs: 5SGX08F4502 (V_{DRM}=4500V, $V_{dc-link}$=1900V, I_{tgqm}=1560A) [11], and 5SGX26L4502 (V_{DRM}=4500V, $V_{dc-link}$=1900V, I_{tgqm}=3120A) [11].

Both IGBT and IGCT can be operated up to a dc-link voltage of about V_{dc}=2200V. All devices have a proportion of about 2:1 between IGBT/IGCT and diode chip size area. It should be noted that the active area of the (4500V, 3120A) IGCT is only 69% of the active area of the (3300V, 1200A) IGBT. The active area of the integrated inverse diode of the (4500V, 3120A) reverse conducting IGCT is only about 58% of the active area of the inverse diode of the IGBT module. Considering the (4500V, 1560A) IGCT the active area of this IGCT and the integrated inverse diode are only 33% of the active area of the IGBT and the inverse diode respectively. To compare IGBT and IGCT inverters both inverters were simulated using a previously developed accurate power semiconductor loss model [25].

Fig. 13 shows the sum of conduction (P_{con_IGCT+D}, P_{con_IGBT+D}) and switching losses (P_{sw_IGCT+D}, P_{sw_IGBT+D}) of the considered IGBTs, IGCTs, and inverse diodes of the PWM inverter as a function of the modulation index

$$m = 2\frac{\sqrt{3}}{2}\frac{\hat{V}_{o,ph}}{V_{dc}}. \qquad (1)$$

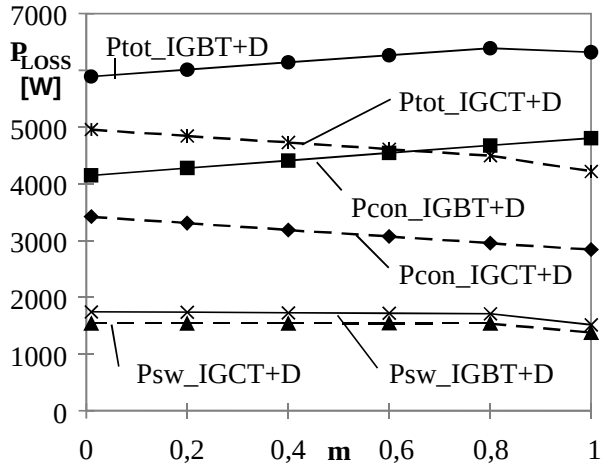

Fig. 13 Conduction, switching, and total losses of a PWM-inverter using (3300V, 1200A)-IGBT modules and (4500V, 3120A)-IGCTs as a function of the modulation index (V_{dc}=1500V; I_o=600A; φ_o=25°; f_s=500Hz; T_j=125°C)

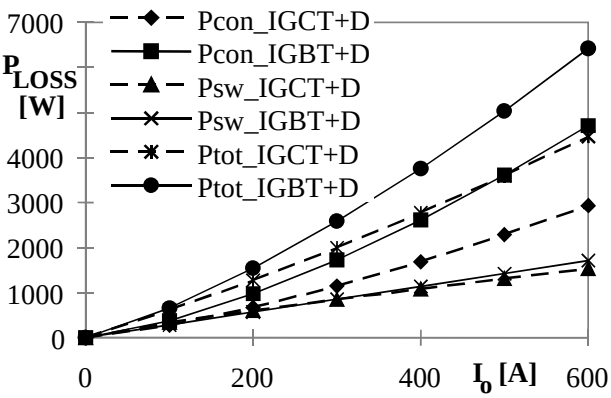

Fig. 14 Conduction, switching, and total losses of a PWM-inverter using (3300V, 1200A)-IGBT modules and (4500V,3120A)-IGCTs as a function of the output current (V_o=520V; φ_o=25°; f_s=500Hz; T_j=125°C)

In the considered operating range the reverse conducting IGCTs generate between 16% (m=0) and 33% (m=1) fewer total losses than the IGBT modules due to the lower total on-state losses. The loss reduction increases with increasing modulation index and rising conduction times of the active semiconductors since both on-state and turn-off losses of the IGCT inverse diodes are higher than those of the IGBT inverse diodes.

The inverter on-state and switching losses are depicted in Fig. 14 as a function of the rms- value of the output phase current. The PWM inverter applying 3120A-IGCTs realizes also in this operating range up to 33% fewer total losses than the IGBT inverter due to the dominating on-state losses of the active semiconductors.

Table I summarizes important characteristics of the considered IGCTs and IGBT modules in the investigated 1.14 MVA inverter as well as general features of the compared devices. Most of the numbers are normalized to the respective base value of the (4500V, 3120A) IGCT.

Table I Comparison of characteristics of IGBT modules and IGCTs in a 1.14 MVA 2L-PWM-VSI

	4500V/ 1560A IGCT	4500V/ 3120A IGCT	3300V/ 1200A IGBT
Silicon Area [p.u.]	0.51	1	1.53
Part Count Silicon Chips	1	1	60
Thermal Resistance [p.u.]	2	1	0.83
$V_{CE/AC}$ @ 1200A [p.u.]	1.35 @ 80A/cm^2	1.0 @ 40A/cm^2	2.0 @ 27.6A/cm^2
Turn-on loss energy @ 1200A [p.u.]	1	1	11
Turn-off loss energy @ 1200A [p.u.]	1	1	0.64
Total semiconductor losses of inverter at low modulation index (m=0.06, 500Hz) [p.u.]	1.15	1	1.19
Total semiconductor losses of inverter at medium modulation index (m=0.61, 500Hz) [p.u.]	1.12	1	1.28
Complexity gate drive [%]	0.75	1	0.75
Gate Drive Power @ f_s=500Hz	0.5	1	0.1
Active control of di/dt & dv/dt	no		yes
Active Clamping	no		yes
Active short circuit limitation	no		yes
High switching frequency stress	yes		yes
di/dt clamp	yes		no
Short circuit current limiter	no		yes
Short Circuit protection	active protection and safe shut down		active protection
Behavior after destruction	short circuit		open circuit
Cosmic radiation	100FIT		no data
Inverter Reliability	≤2300 FIT		no data

Comparing the devices it is important to note that the silicon area of the IGBT is about 50% larger than that of the 3120A IGCT. The 1560A IGCT has only one third of the active silicon area of the IGBT module. Obviously the IGCTs realize a distinctly higher silicon utilization than the IGBT module in the considered inverter. Taking this silicon utilization into consideration the IGCT has a substantial cost advantage compared to the IGBT module

While the IGBT module consists of 60 chips which are connected by 450 bond wires the IGCTs have just one silicon waver in the proven reliable press pack. The IGCTs realize just 50% (3120A-IGCT) and 67.5% (1560A-IGCT) of the on-state voltage of the IGBT at 45% (3120A-IGCT) and 189% (1560A-IGCT) increased current density, respectively. The di/dt clamp of the IGCT inverter causes clearly lower turn-on losses of the IGCTs in comparison to the investigated IGBT. However, the IGBT generates lower turn-off losses than IGCTs if a gate resistance of R_{G-}=3.3Ω is assumed. Despite the substantially reduced area of active silicon the 1560A IGCTs realize lower losses than the IGBTs in the considered PWM inverter at low and medium modulation indices and a switching frequency of f_s=500Hz. The 3120A IGCTs generate about 16%-22% fewer losses than the IGBT modules.

Comparing state-of-the-art gate drives of IGBTs and IGCTs the complexity of a high voltage IGBT module gate drive was assessed to be as complex as the gate drive of the 1560A IGCT. The part count and complexity of the 3120A IGCT was evaluated to be slightly higher. The IGBT gate drives require about 10%-20% of the IGCT gate drive power due to the MOS control of the high voltage IGBT. However, the absolute value of the gate drive power is very small for all semiconductors. The possibility to adjust di/dt´s and dv/dt´s during switching transients using the gate drive, the possibility of active clamping, and the limitation of short circuit currents by the device combined with the possibility to turn off actively short circuit currents within 10µs are advantageous features of the high voltage IGBTs. IGCTs and IGBTs have no problems with high switching frequency stress of worst case pulse patterns.

The risk of a shoot through is always present in a dc-voltage-link inverter. Of course this situation has to be handled safely. In the IGCT inverter the surge current is limited by the di/dt clamp. The IGCTs will safely short circuit under all worst case failure conditions and the control will stop the operation of the inverter immediately in this case. A special short circuit current limiter can limit the destruction of IGBT modules caused by a shoot through. However, the open circuit of an IGBT module after destruction is a serious drawback of this device in several applications, like for instance in converters with series connection. At the moment there are not sufficient data about the reliability of high voltage IGBTs in industrial or traction converters available. Today there are excessive date of field experience of IGCTs. Recent data from qualification tests on a 100MVA railway intertie in Germany indicate that a Failure in Time of FIT≤2300 is to be expected for a full 3MVA IGCT inverter. Today the proven outstanding reliability of IGCT inverters is another substantial advantage of this technology.

B. Three-Level PWM Voltage Source Inverter with Active Front End

To extend the comparison of IGCTs and IGBTs to a three-level PWM-Voltage Source Converter a 6 MVA unit (V_{dc}=4840V, V_{1l}=3300V, I_o=1050A, S=6 MVA) consisting of a neutral point clamped inverter and rectifier was chosen. Fig. 15 shows the principle circuit configuration which replaces conventional cycloconverters in hot and cold rolling mills. The active front end enables a four quadrant operation of the drive. A low cost transformer and filter design becomes possible by the basically sinusoidal input currents of the rectifier which are generated by optimized pulse patterns. Fig. 16 shows the IGCT topology using 91mm reverse conducting IGCTs 5SGX18L6004 (V_{DRM}=4500V, $V_{dc\text{-}link}$=2700V, I_{tgqm}=2190A) [26]. Four small di/dt clamps (L_R=3.4µH) were assumed to limit the rate of current rise to about di_A/dt=700A/µs and to enable a save shut down of the converter in the rare case of an internal shoot through in the converter. In contrast the IGBT converter operates without any passive clamp or snubber circuit (Fig. 17). However, the series connection of two single switch IGBT modules per switch position is necessary in up to date commercially available 3.3kV and 4.16kV medium voltage drives if 3.3kV IGBTs are applied. It should be noted that the active area of the (4500V, 2190A) IGCT is only 69% (GCT) and 58% (inverse diode) compared to the IGBT and the inverse diode of the afore mentioned (3300V, 1200A) IGBT module FZ1200R33KF1. Taking the necessary series connection of IGBT modules into consideration the 3.3kV IGCT converter uses only 34.5% (GCT) and 29% (inverse diode) of the active silicon area of IGBTs and diodes in the 3.3kV IGBT converter. To simulate the converter losses the minimum IGBT switching losses using a very small gate resistance of R_{G+}=1.8Ω/R_{G-}=3.3Ω and an optimum voltage distribution between the two series connected IGBT modules were assumed. In real industrial converters the IGBT gate units are adjusted to generate di/dt's and dv/dt's of about 3kA/µs and 3kV/µs during switching transients respectively to avoid large overvoltages in the converter and at the terminals of the machine. Furthermore small delay times during switching transients of series connected IGBTs will cause additional IGBT switching losses during the active clamping operation of the IGBTs in real converters [22]. Considering real conditions the switching losses of industrial IGBT converters will be distinctly higher than the simulated values.

Fig. 18 shows the converter losses as a function of the phase current. Although the switching losses represent the best case for the IGBT module, the reverse conducting IGCTs and the IGCT-clamps generate about 25% fewer losses than the IGBT modules in inverter and rectifier at 6MVA (I_{ph}=1150A). The reason for the substantial loss savings of the IGCT converter are the substantially smaller on-state losses of the IGCTs.

The loss distribution of the IGCT and IGBT converter is depicted in Fig. 19 for a rms value of the phase current of I_o=525A. Obviously the IGCT converter (inverter and rectifier) generates only 39% of the on-state losses of the IGBT converter. In contrast the IGBT switching losses are only about 69% of the sum of switching and clamp losses of the IGCT converter. However, assuming real gate drive conditions the IGBT switching losses are estimated to be approximately equal to the sum of switching and clamp losses of the IGCTs. Assuming the lowest possible switching losses for the IGBT module the IGCT converter, which uses only about 30% of the active silicon area of the IGBT converter, still generates about 20% fewer total converter losses than the IGBT converter. Summarizing one can say, that low losses at small active silicon area, fast switching, a small part count, the reliable press pack in a compact mechanical arrangement which can be easily assembled enable the design of low cost, compact, reliable, highly efficient, and 100% explosion free IGCT converters. 300 kVA-10 MVA IGCT converters can be achieved without series or parallel connection of devices or converters. The simple and robust series connection of IGCTs will extend the power range of IGCT converters up to several 100 MVA for the power system market.

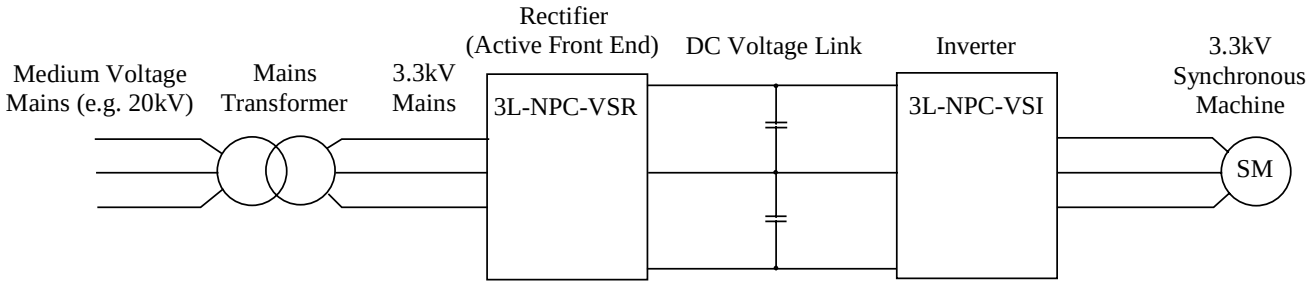

Fig. 15 Principle schematic of a PWM 3L-NPC-Voltage Source Converter with active front-end

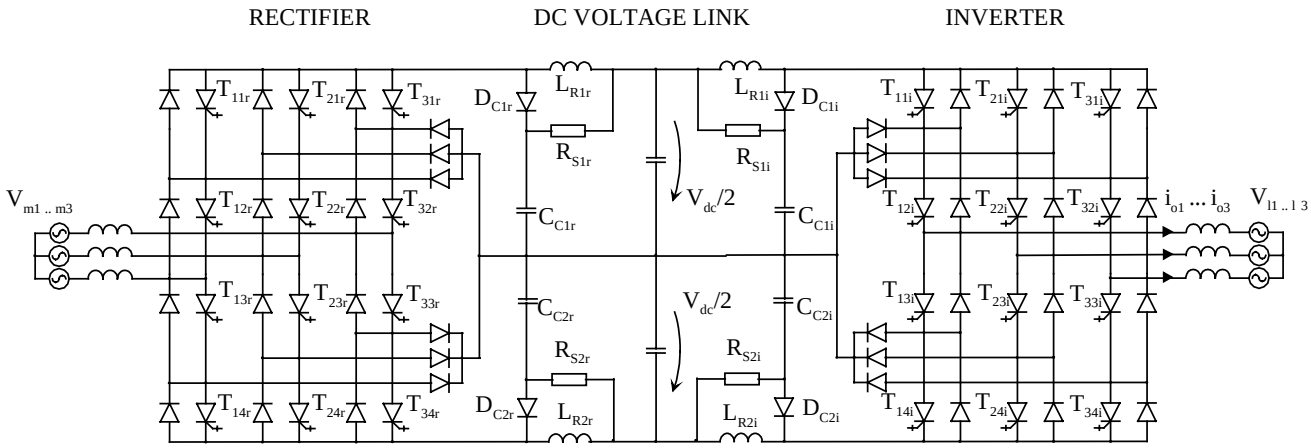

Fig. 16 Circuit configuration of a 6 MVA 3L-NPC Voltage Source Converter with (4500V, 2190A) reverse conducting IGCTs for a 3.3kV drive

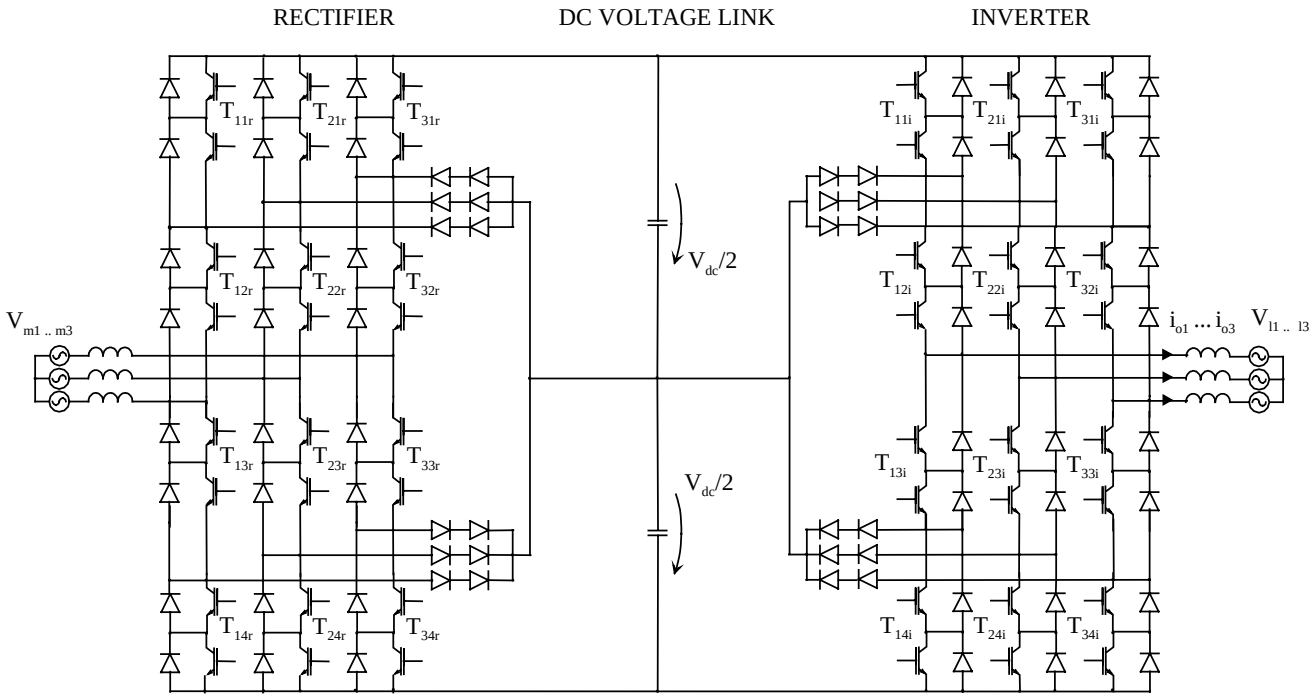

Fig. 17 Circuit configuration of a 6 MVA 3L-NPC Voltage Source Converter with (3300V, 1200A) IGBTs for a 3.3kV drive

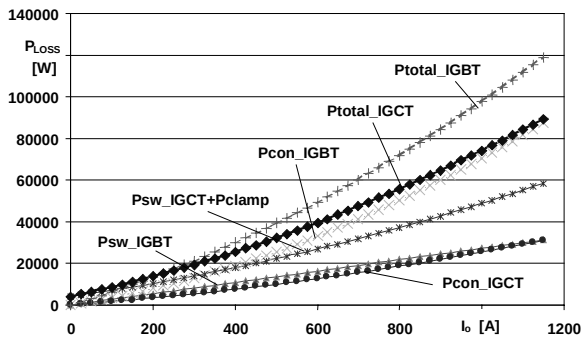

Fig. 18 Losses of a (3300V, 1200A)-IGBT and (4500V, 2190A)-IGCT converter of a 3.3kV drive vs. load current (V_{ll}=3008V; V_{dc}=4840V; cosφ_o=1; cosφ_i=-1; f_s=840Hz; T_j=125°C)

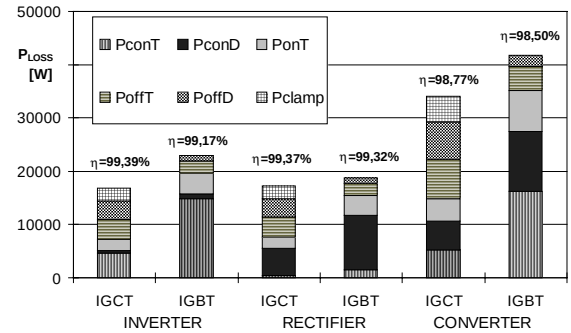

Fig. 19 Loss distribution at 3MW for a (3300V, 1200A)-IGBT and a (4500V, 2190A) IGCT converter of a 3.3kV drive (V_{ll}=3008V; V_{dc}=4840V; I_o=525A; cosφ_o=1; cosφ_i=-1; f_s=840Hz; T_j=125°C)

High voltage IGBTs offer interesting features like active control of dv/dt and di/dt, active clamping, short circuit limitation, and active protection. However, higher on-state and total losses, a substantially smaller utilization of the active silicon area and higher costs are substantial disadvantages of up to date high voltage IGBTs. The undefined failure mode, the explosion during a short circuit in the dc-link which can not be turned off and reliability problems under thermal cycling are additional drawbacks of IGBTs in the module package which are usually applied in industrial converters.

IV. NEW MEDIUM VOLTAGE PWM INVERTER FOR VARIABLE SPEED DRIVES IN INDUSTRY APPLICATIONS

There is a large variety of topologies to feed variable speed medium voltage induction or synchronous machines. The customer can choose between old fashioned thyristor Current Source Inverters (CSI), PWM-CSIs applying conventional GTOs, multi-level inverters on the basis of low voltage IGBTs and three-level VSIs with IGCTs, high voltage IGBTs and GTOs. However, the introduction of new products by different manufacturers shows, that there is a trend towards PWM controlled 3L-NPC-VSIs. The high reliability, low losses, low costs and the wide range of the switch power of the IGCTs available on the market make the IGCT to an excellent choice for medium voltage drives. Since IGCTs are technically and economically preferable to GTOs and currently available 3.3kV/4.5kV IGBT modules, a recently introduced IGCT converter family for medium voltage drives is described below.

Fig. 20 shows the circuit configuration of the compact 3L-NPC-VSI ACS1000 [5], [6]. A 12-pulse diode bridge realizes a reliable, efficient and low cost rectification of the input voltage for applications, which do not require a regeneration of electrical energy into the mains like pumps, fans and conveyor belts**.** Using a properly designed transformer, the standard IEEE 519-1992 can be fulfilled if the short circuit power of the feeding line is at least about 30 times higher than the rated power of the drive. In weaker mains a 24-pulse diode rectifier can be applied [5].

The PWM inverter is offered for 2.3kV, 3.3kV and 4.16kV mains which corresponds to typical dc-link voltages of 3.4kV, 4.9kV and 5.9kV. 38mm, 51mm, 68mm and 91mm 4.5kV and 5.5kV IGCTs with integrated inverse diodes and discrete NPC diodes are used as power semiconductors. A small concentrated di/dt clamp in the upper and the lower half bridge limits the di/dt of the turning off diodes and the short circuit current.

The IGCT 3L-NPC-VSI realizes distinctly lower total losses than an IGBT inverter due to substantially smaller on-state voltages of the IGCTs. The IGCTs are operated with an average switching frequency of f_s=500Hz which corresponds to an average output frequency of the inverter of f_o=1000Hz [6].

Substantial disadvantages of variable speed drives which are fed by inverters without output filter are the necessary derating of standard motors caused by the extra losses of the harmonics, the high insulation stress due to steep dv/dt's at the inverter output (up to 10kV/µs for IGCTs and IGBTs) and the increased audible noise due to a non-sinusoidal magnetic flux of the iron core. In the VSI of Fig. 20 the LC output filter, which is tuned to a resonance frequency of about 360Hz, in combination with an integrated active damping function of the drive control completely avoids these drawbacks [6]. Fig. 21 shows measured waveforms of the modulated line to line output voltage of the inverter and the smoothed line to line input voltage of the motor for a 2.3kV induction machine. The corresponding spectrum of the motor voltage shows a total harmonic distortion of 1.7% which is well below the IEEE 519-1992 limit of 5% [5].

The grounding of the star point of the LC filter and an optional common mode choke decrease common mode distortions to very low levels even if long cables (e.g. 300m between transformer and rectifier) are used.

The protection of the converter is characterized by a fuseless design. Two reverse conducting IGCTs between rectifier and dc-link capacitor separate the rectifier from the dc-link in the rare case of an inverter failure. The turn-off transients of these protection switches are so fast, that the line and diode currents just rise by some percent due to the effective total stray inductance of the input informer. In the case of a very improbable diode short, the transformer protection switch is fast enough to protect the rectifier from mechanical destruction [5].

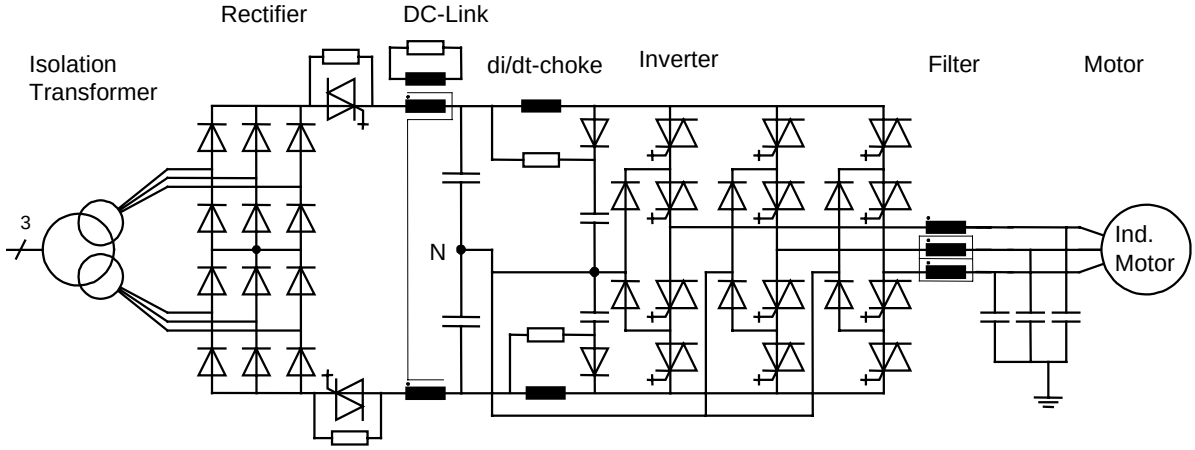

Fig. 20 Circuit configuration of a 3L-NPC-VSI with 12 pulse rectifier and LC filter

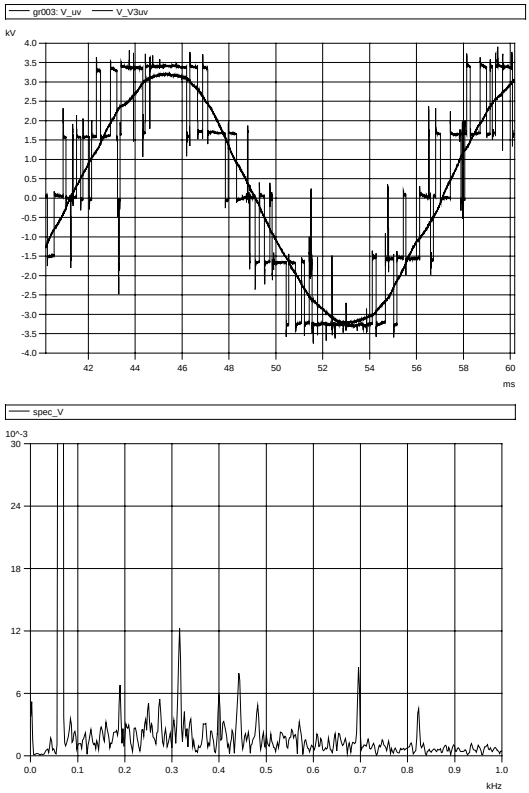

Fig. 21 Waveforms (line to line voltage of inverter; line to line voltage of motor) and spectrum of motor voltage (10 units are equal to 1% of fundamental) of a 2.3kV drive [5]

To enable an accurate speed control and an excellent dynamic behavior, the stator field oriented direct torque control (DTC) has been applied. DTC is a well proven sophisticated control scheme which works in thousands of low voltage drives in a large variety of industrial applications. The static speed control error is only about 10% of the motors slip i.e. for a standard ac machine it is in the range of 0.1%. To enable a fast commissioning the control software starts an identification run to identify the motor parameters before the first start of the motor.

V. NEW POWER CONVERTERS FOR TRACTION APPLICATIONS

Traction converters are fed by dc mains (e.g. 750V; 1.5kV; 3kV) or single phase ac lines (e.g. 15kV; 25kV) in electric trains or from synchronous generators in diesel-electric locomotives. Up to date traction drives apply VSI fed induction machines due to the outstanding performance and the high reliability in the entire required power range. To decrease investment costs the next development steps will concentrate on a simplification of both the applied converter circuits and mechanical constructions. Increased efficiencies will enable lower operating costs. Furthermore performance improvements like faster accelerations and higher speeds require the development of concepts with reduced weight. Both the state-of-the-art and trends of traction converters are briefly summarized below.

A. Traction Converters at DC Mains

The feeding of traction converters by dc mains is complicated by the large variations of the dc voltages of –30% to +40%. The most efficient and simple solution for a traction converter is a two-level VSI which is directly connected via an LC filter to the dc mains (Fig. 22). However, until recently this circuit could not be applied since there were no fast switching semiconductors with a sufficient blocking voltage available on the market. Therefore different circuit configurations with series connected input choppers, which also enable an efficient operation of the three-phase VSI by the generation of a stabilized dc-link voltage, were applied. As an example Fig. 23 shows a circuit, which was conventionally applied at 3kV mains. 4.5kV GTOs operating at dc-link voltages of 2.6-2.8kV mains were the standard power semiconductors.

The additional costs, weight and losses of the input choppers of conventional solutions are substantial disadvantages. Today 1700V IGBT modules which are available

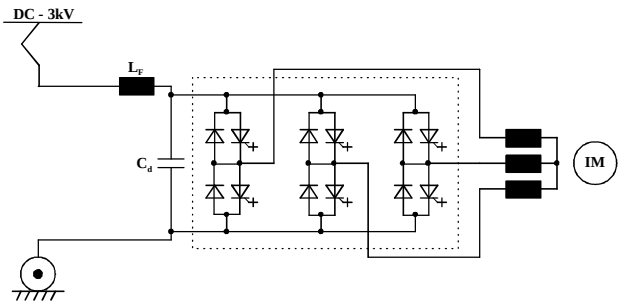

Fig. 22 Traction converter directly connected to the dc mains

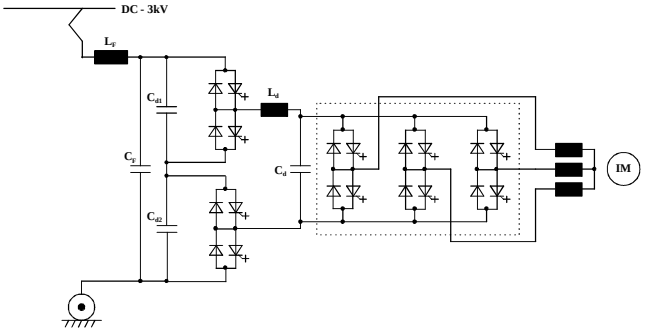

Fig. 23 Two stage traction converter for operation at dc mains

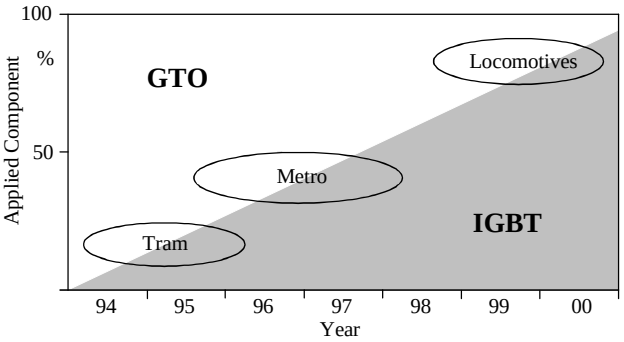

Fig. 24 Application of semiconductors in traction converters by ADtranz [23]

up to 2400A enable a direct operation of two-level VSIs at 750V dc mains. The maximum power of about 1MW of a VSI applying 1700V/2400A IGBTs enables the use in trams and subways. Now the availability of 3.3kV IGBT modules up to currents of 1200A allows the use of the directly connected VSI at 1500V dc mains. For the 3kV dc mains with a maximum dc voltage of 4.3kV water cooled phase modules on the basis of 6.5kV Punch Through GTOs are currently used. The recently introduced 6.5kV IGBTs will replace these GTOs in the future. Simulations showed, that inverters with a nominal dc-link voltage of V_{dc}=3kV consisting of two parallel (6500V, 600A) IGBT modules per switch position enable an increase of the phase current (output current) by 25% in comparison to the use of two series connected (3300V, 1200A) IGBT modules per switch position, which have about the same installed switch power. Fig. 24 shows the application of IGBTs and GTOs in traction converters by ADtranz. Obviously IGBTs will replace conventional GTOs in traction converters more and more. However, also the use of IGCTs is under consideration by different traction converter manufacturers.

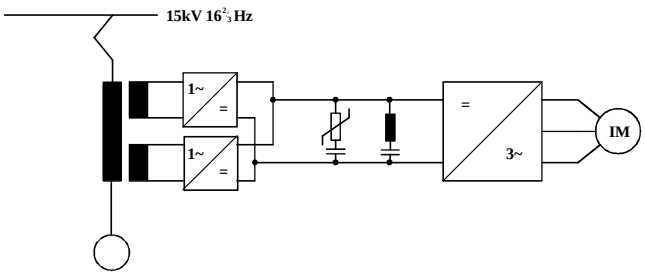

Fig. 25 Conventional structure of a traction converter at ac mains

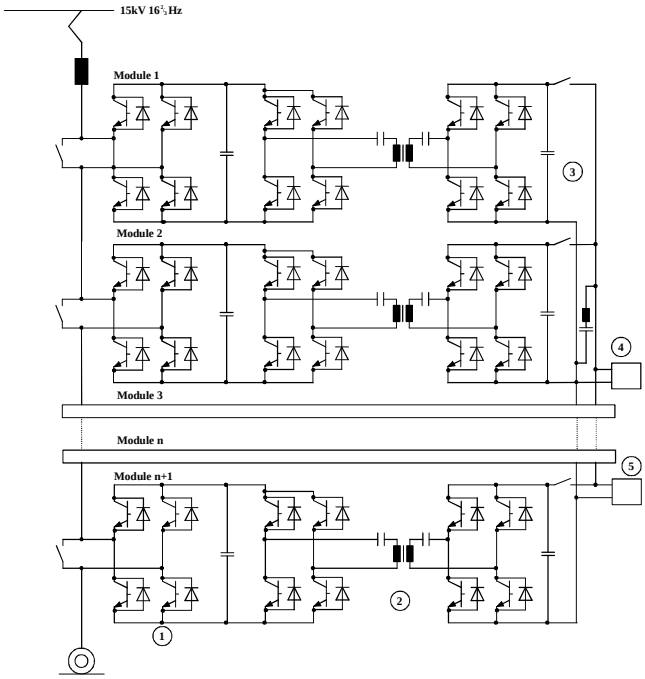

Fig. 26 Medium frequency topology of a future traction converter at ac mains [23]

1) Mains side multi-level converter
2) DC/DC Converter and medium frequency transformer
3) Dc-voltage-link
4) PWM VSI and induction machine
5) Auxiliary Converters

B. Traction Converters at AC Mains

Fig. 25 shows the typical circuit configuration of a conventional traction drive at ac mains. A low frequency transformer (e.g. 16 2/3 Hz or 50Hz) realizes the connection to the single phase medium voltage mains (e.g. 15kV or 25kV). Depending on the required power two to six parallel connected four quadrant drives convert the power between the secondary single phase windings of the transformer and the dc-voltage-link. A two-level VSI generates the adjustable voltage for the induction machine. 4.5kV GTOs are the conventionally applied semiconductors.

To save costs at increased efficiency the locomotive 12X on the basis of 4.5kV IGBTs has been put into operation. The locomotive operates at 15kV/ 16 2/3 Hz and 25kV/ 50Hz mains respectively. Both four quadrant converters and

VSI are realized on the basis of a Modular Power Converter [18].

A drastic reduction of the weight of the transformer at distinctly increased efficiency can be achieved by the new converter topology shown in Fig. 26 [23]. A multilevel converter, consisting of n four quadrant converters enables a high resulting switching frequency towards the mains. N soft switching dc/dc converters allow by the use of extremely compact distributed medium frequency transformers a drastic reduction of the total transformer weight compared to a conventional low frequency line transformer. The dc/dc converters are all connected in parallel at the secondary side of the medium frequency transformers to feed one dc-voltage-link. The new converter concept will enable a weight reduction of 50% of the entire line-side converter system including transformer and filter [23]. First test layers with prototypes on the basis of this new converter concept can be expected for the year 2003.

VI. CONCLUSIONS

The recent development of new high voltage semiconductors like IGCTs and high voltage IGBTs enables substantial cost reductions and performance improvements of PWM converters for industrial and traction applications. Both line or load commutated thyristor converters and conventional GTO converters with dc current link or dc voltage link are increasingly replaced by two and three-level PWM-VSIs with IGCTs and IGBTs in different industrial and traction applications. A detailed comparison of IGCTs and IGBTs showed, that IGCTs are the mature devices for industrial medium voltage drives today. Low losses at small active silicon area, fast switching, a small part count, the reliable press pack in a compact mechanical arrangement which can be easily assembled enable the design of low cost compact, reliable, highly efficient, and 100% explosion free IGCT converters. 300kVA-10MVA IGCT converter can be achieved without series or parallel connection of devices or converters. In traction applications both the replacement of GTOs by IGBTs and new converter concepts will lead to higher converter efficiencies and lower costs.

REFERENCES

[1] A. Scharf, “State of the Art and Future Trends”, *PCIM Europe*, No. 3, 1998, pp. 108-126.

[2] L. Lorenz, G. Deboy, M. März, J. Stengl, A. Bachofner, „Drastic Reduction of On-Resistance with Cool MOS“, *PCIM Europe*, No. 5, 1998, pp. 250-258.

[3] J.M. Peter, „Power Components: Which Evolution? Consequences of the Power Converter Design“, *Conf. Rec.AES*, 1997, pp. 101-108.

[4] S. Bernet, R. Teichmann, A. Zuckerberger, P. Steimer, “Comparison of High Power IGBTs and Hard Driven GTOs for High Power Inverters”, *Conf. Rec. of IEEE-APEC*, 1998, pp. 711-718.

[5] J.K. Steinke, M.K. Buschmann, “Robust and Reliable Medium Voltage PWM Inverter with Motor Friendly Output”, *Conf. Rec. VII. Seminario de Electronica de Potencia*, Chile, 1999.

[6] J.K. Steinke, R. Vuolle, H. Prenner, J. Järvinen, ”New Variable Speed Drive with Proven Motor Friendly Performance for Medium Voltage Motors”, *Conf. Rec. IEEE-IEMDC*, 1999, pp. 235 -239.

[7] H.E. Grüning, B. Ødegard, J. Rees, A. Weber, E. Carroll, S. Eicher, „High Power Hard Driven GTO Module for 4.5kV/3kA Snubberless Operation“, *Conf. Rec. PCIM*, 1996, pp. 169-183.

[8] H.E. Grüning, B. Ødegard, “High Performance Low Cost MVA Inverters Realized with Integrated Gate Commutated Thyristors (IGCT)“, *Conf. Rec. EPE*, 1997, pp. 2060-2065.

[9] S. Lindner, S. Klaka, M. Frecker, E. Caroll, H. Zeller, „A New Range of Reverse Conducting Gate Commutated Thyristors for High Voltage, Medium Power Application“, *Conf. Rec. EPE*, 1997, pp. 1117-1124.

[10] P.K. Steimer, H.E. Grüning, J. Werninger, E. Carroll, S. Klaka, S. Lindner, „IGCT - A New Emerging Technology for High Power, Low Cost Inverters“, *Conf. Rec. IAS, 1997*, pp. 1592-1599.

[11] Data Sheet the of reverse conducting IGCTs 5SGX26L4502, 5SGX08F4502, ABB Semiconductors, 1998.

[12] Y. Takahashi, T. Koga, K. Yoshikawa, K. Yamazaki, H. Kirihata, Y. Seki, F. Eschrich, „2.5kV/1.8kA Power Pack IGBT“, *Conf. Rec. ETG Report 72*, 1998, pp. 43-54.

[13] K. Sommer, J. Göttert, G. Lefranc, R. Spanke, „Multichip High Power IGBT-Modules for Traction and Industrial Application“, *Conf. Rec. EPE*, 1997, pp. 1112-1116.

[14] H. Brunner, M. Hierholzer, T. Laska, A. Porst, R. Spanke, „3300V IGBT Module for Traction Application“, *Conf. Rec. EPE*, 1997, pp. 1056-1059.

[15] H. Brunner, M. Bruckmann, M. Hierholzer, T. Laska, A. Porst, „Improved 3.5kV IGBT-Diode Chipset and 800A Module Applications“, *Conf. Rec. of IEEE-PESC*, 1996, pp. 1748-1753.

[16] M. Hierholzer, R. Bayerer, A. Porst, H. Brunner, „Improved Characteristic of 3.3kV IGBT Modules“, *Conf. Rec. PCIM*, 1997, pp. 201-204.

[17] K. Ishii, Y. Konishi, M. Takeda, E. Thal, G. Debled, „A New High Power, High Voltage IGBT“, *Conf. Rec. PCIM*, 1997, pp. 185-190.

[18] G. Hilpert, T. Züllig, „Integrated Power Module in IGBT Technology for Modular Power Traction Converters“, *Conf. Rec. EPE* 1997, pp. 1106-1111.

[19] Technical Information IGBT Module FZ1200R33KF1, EUPEC, 1998.

[20] A. Hamidi, G. Coquery, R. Lallemand, „Reliability of High Power IGBT Modules Testing on Thermal Fatigue Effects due to Traction Cycles“, *Conf. Rec. EPE*, 1997, pp. 3118-3122.

[21] R. Marquardt, M. Bakran, R. Sommer, J. Teigelkötter, „Application of High Voltage IGBT and GTO in Traction Converters“, *Conf. Rec. ETG Report 72*, 1998, pp. 273-286.

[22] M. Bruckmann, R. Sommer, M. Fasching, J. Sigg, „Application of IGBTs in High Power Converters“, *Conf. Rec. ETG Report 72*, 1998, pp. 221-234.

[23] G. Kratz, H. Strasser, „Drive Concepts for Future Railway Vehicles“, *Elektrische Bahnen*, 1998, pp. 333-337.

[24] R.W. De Doncker, „Recent Developments of Power Electronic Components for High Power Applications“, *Conf. Rec. of the Conference: Modern Power Semiconductors and Power Electronic Systems in Railway Applications*, 1999, pp. 1-32.

[25] S. Bernet, T. Matsuo and T.A. Lipo, „A Matrix Converter Using Reverse Blocking NPT-IGBTs and Optimized Pulse Patterns“, *Conf. Rec. IEEE-PESC*, 1996, pp. 107-113.

[26] Data Sheet – Reverse Conducting IGCTs, ABB Semiconductors, Lenzburg, Switzerland, 1999.

[27] M.K. Buschmann, J.K. Steinke, “Robust and Reliable Medium Voltage PWM Inverter with Motor Friendly Output”, *Conf. Rec. EPE*, 1997, pp. 3502-3507.

[28] Th. Schütze, H. Berg, M. Hierholzer, “Further Improvements of Reliability of IGBT Modules”, *Conf. Rec. IEEE-IAS*, 1998, pp. 1022-1025.