Robust Model Reference Adaptive Control Applied to Three-Phase Uninterruptible Power Supplies

Emerson Giovani Carati, Hilton Abílio Gründling, José Renes Pinheiro
UFSM/CT/DELC/NUPEDEE
CEP: 97105-900 – Santa Maria, RS – Brazil
emerson@engineer.com, ghilton@pequim.ctlab.ufsm.br, renes@pequim.ctlab.ufsm.br

***Abstract* - In the high power converters such as three-phase inverters is recommended to operate at low frequencies, due to the switching losses. In addition, modeling errors and non linear loads with unmodeled dynamics frequently degrade the controllers performance resulting in a poor transient response and instability. This paper presents a robust model reference adaptive controller (RMRAC) for three-phase uninterruptible power supplies. The three-phase system model is rewritten, using a synchronous transformation in dq coordinates, and a RMRAC controller is used to assure system robustness and performance. Simulation and experimental results are used to show the closed-loop system performance under several operation conditions.**

I. Introduction

Three-phase inverter systems is usually found in to high power applications, where it is required high efficiency and low total harmonic distortion. By increasing the switching frequencies it is possible to reduce the total harmonic distortion in the output waveforms. However, in high power static converters, the switching losses increase with the elevation of the switching frequency. Therefore, efforts have been done for that high power converters obtain good performance even operating at low switching frequencies [1]-[4]. Such systems demand high performance controllers to compensate eventual or periodic disturbances in the waveforms, such as the ones that appear under non linear loads. In addition, modeling errors and unmodeled dynamics are quite common, due to simplifications of the model and characteristics of the plant. All these factors influence directly in the converter performance, and, in more critical cases, they even compromise the controllers use in the system, as described in [5]. Zhang et al [2] use a synchronous transformation and a load conditioner using a PI controller acting in a high frequency to compensate the distortions in the output waveform. However, the static load conditioner increases in 20% the nominal power to compensate the effects of the load disturbances. Gründling et al [5], [6], introduce a robust model reference adaptive controller (RMRAC) applied for single-phase uninterrupted power supplies, that even operating at low switching frequencies it presents results with good transient response. In this paper it is investigated the application of these controller for a three-phase structure. The three-phase system model is obtained using a synchronous transformation in dq coordinates. Then, a RMRAC controller is designed to guarantee robustness and good performance. Simulation and experimental results are presented to verify the dynamic performance of the resulting closed-loop system.

This paper is organized as follows: the Section II contains the description of the plant while in the Section III presents the closed-loop system structure. The proposed RMRAC control law is described in the Section IV. The Section V presents the parameter adaptation algorithm. Simulation and experimental results are given in the section VI. The section VII concludes the paper.

II. Plant Description

The proposed system shown in the Fig. 1 is formed by a three-phase inverter, a delta (Δ) connected LC filter and three-phase load. The system state space model is given by:

$$\begin{bmatrix} \dot{i}_R \\ \dot{i}_S \end{bmatrix} = \frac{1}{3L_f}\begin{bmatrix} 2 & 1 \\ -1 & 1 \end{bmatrix}\begin{bmatrix} V_{RS} - V_{UW} \\ V_{ST} - V_{VW} \end{bmatrix} - \frac{R_f}{L_f}\begin{bmatrix} i_R \\ i_S \end{bmatrix}, \qquad (2.1)$$

$$i_T = -(i_R + i_S)$$

and

$$\begin{bmatrix} \dot{V}_{RS} \\ V_{ST} \end{bmatrix} = \frac{1}{3C_f}\begin{bmatrix} 1 & -1 \\ 1 & 2 \end{bmatrix}\begin{bmatrix} -i_R - i_{RL} \\ -i_S - i_{SL} \end{bmatrix}, \qquad (2.2)$$

$$V_{TR} = -(V_{RS} + V_{ST}).$$

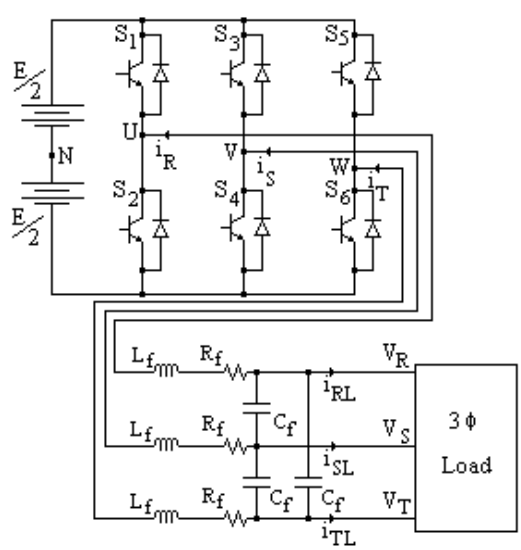

Fig. 1. Three-phase PWM inverter system.

In (2.2), the load currents i_{RL} and i_{SL} depend of the configuration and balancing condition of the load. The resistive load is connected in wye (Y) configuration as shown in the Fig. 2a. The load currents i_{RL} and i_{SL}, in the Fig. 2a, are given by:

$$i_{RL} = \frac{2\,V_{RS}}{3R} + \frac{V_{ST}}{3R}, \quad i_{SL} = -\frac{V_{RS}}{3R} + \frac{V_{ST}}{3R}. \qquad (2.3)$$

When the load is connected in delta (Δ) configuration, as shown in the Fig. 2b, the load currents i_{RL} and i_{SL} become:

$$i_{RL} = \frac{2\,V_{RS}}{R} + \frac{V_{ST}}{R}, \quad i_{SL} = -\frac{V_{RS}}{R} + \frac{V_{ST}}{R}. \qquad (2.4)$$

The inverter switches $S_{1\text{-}6}$ are turned on and off once every sampling interval T, so that the line to line inverter voltages, V_{UV}, V_{VW} and V_{WU}, are pulses with amplitude E, 0 and –E. These inverter output PWM voltages generate the output system voltages, V_{RS}, V_{ST} and V_{TR}.

III. Closed-Loop System Structure

The three-phase reference model outputs, y_{mr}, y_{ms} and y_{mt}, are converted in dq coordinates, y_{md} and y_{mq}, by a T synchronous transformation, given in (3.1). In this point is interesting to note that y_{md} and y_{mq} are independent orthogonal variables.

Such as shown in the Fig. 4, the control laws u_d and u_q and the tracking errors e_d and e_q are computed separately for each axis *d* and *q*, respectively, using a single RMRAC controller for each axis.

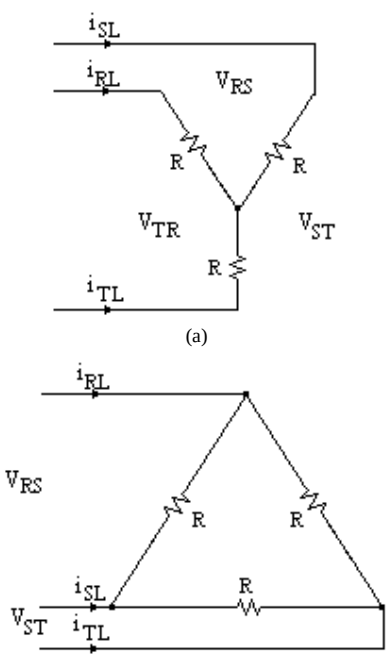

Fig. 2. Load configuration: (a) wye -Y and (b) delta - Δ.

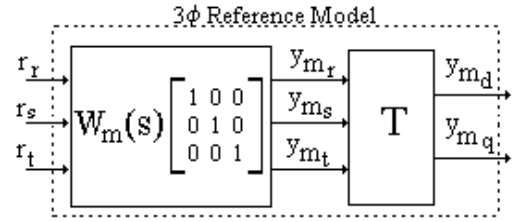

Fig. 3. Reference model of a three-phase UPS system.

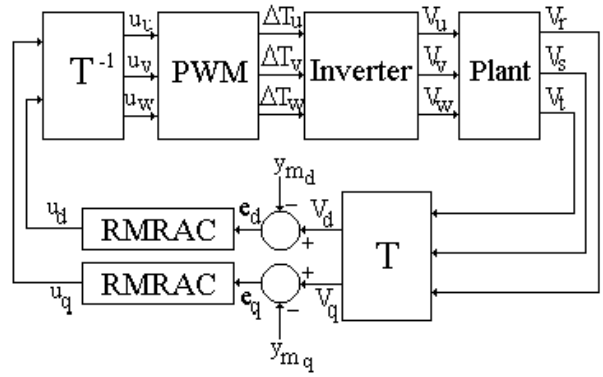

Fig. 4. Block diagram of a three-phase UPS system with RMRAC controller.

$$T = \frac{2}{3}\begin{bmatrix} \cos(\omega t) & \cos(\omega t - \frac{2}{3}\pi) & \cos(\omega t + \frac{2}{3}\pi) \\ -\sin(\omega t) & -\sin(\omega t - \frac{2}{3}\pi) & -\sin(\omega t + \frac{2}{3}\pi) \\ \frac{1}{2} & \frac{1}{2} & \frac{1}{2} \end{bmatrix} \qquad (3.1)$$

$$T^{-1} = \begin{bmatrix} \cos(\omega t) & -\sin(\omega t) & 1 \\ \cos(\omega t - \frac{2}{3}\pi) & -\sin(\omega t - \frac{2}{3}\pi) & 1 \\ \cos(\omega t + \frac{2}{3}\pi) & -\sin(\omega t + \frac{2}{3}\pi) & 1 \end{bmatrix} \qquad (3.2)$$

Using the T transformation, the load measured voltages variables, V_r, V_s and V_t are converted in orthogonal output voltage variables, V_d and V_q. The system output errors, e_d and e_q, are obtained through a comparison of these variables with that ones from the reference model, y_{md} and y_{mq}, respectively. From these errors, the RMRAC algorithm computes separately the orthogonal control variables, u_d and u_q. Then, the three-phase control variables, u_u, u_v and u_w, obtained by the T^{-1} transformation, are converted in PWM signals, ΔT_u, ΔT_v and ΔT_w. Then, the PWM inverter generates the LC filter input voltages, V_u, V_v and V_w, respectively.

IV. RMRAC Controller Structure

Consider a single-input single-output plant (SISO) as presented in Fig. 5.

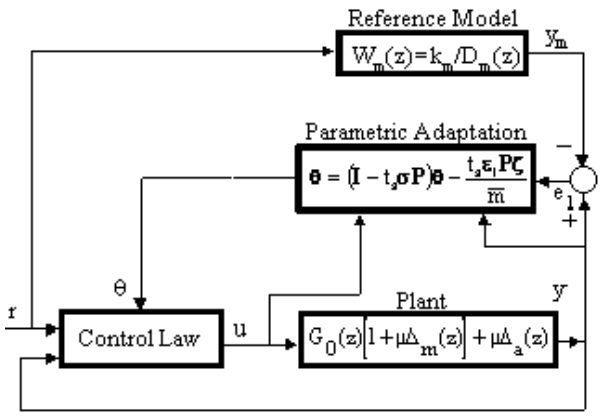

Fig. 5. RMRAC – UPS

$$y = G(z)u$$
$$y = [G_0(z)[1+\mu\Delta_m(z)]+\mu\Delta_a(z)]\,u \tag{4.1}$$

with

$$G_0(z) = k_p \frac{Z_0(z)}{R_0(z)} \tag{4.2}$$

where G(z) is the transfer function of the plant, $G_0(z)$ is the strictly proper transfer function of the modeled part of the plant, $\mu\cdot\Delta_m(z)$ and $\mu\cdot\Delta_a(z)$ are additive and multiplicative perturbations, respectively. $Z_0(z)$ and $R_0(z)$ are monic polynomials with degree *m* and *n*, respectively.

Concerning the modeled part of the plant $G_0(z)$ the following assumptions are made:

S1. $Z_0(z)$ is a monic Hurwitz polynomial of degree $m\ (\leq n\text{-}1)$.

S2. $R_0(z)$ is a monic polynomial of degree *n*.

S3. The sign of k_p and the values of *m* and *n* are known.

Concerning the unmodeled plant part is assumed that:

S4. $\Delta_a(z)$ is a strictly proper stable transfer function.

S5. $\Delta_m(z)$ is a stable transfer function.

S6. A lower bound $p_0 > 0$ for which the poles of $\Delta_a(z\text{-}p)$ and $\Delta_m(z\text{-}p)$ are stable are known.

The control objective is: Given the reference model

$$y_m = W_m(z)\cdot r = (K_m/D_m(z))r \tag{4.3}$$

where $D_m(z)$ is a Hurwitz polynomial of degree $n^* = n - m$ and r(t) is uniformly bounded, design a adaptive controller so that for some $\mu^* > 0$ and any $\mu \in [0,\mu^*)$ the resulting closed-loop plant is stable and the output plant *y* tracks the reference model output y_m as closely as possible for all perturbations $\Delta_a(z)$ and $\Delta_m(z)$ satisfying **S4 - S6.**

As in [6] the input *u* and the output *y*, in the discrete time domain, are used to generate *n*-1 dimensional auxiliary vectors, so that

$$\omega_1(k) = (zI - F)^{-1} q\, u(k)$$
$$\omega_2(k) = (zI - F)^{-1} q\, y(k) \tag{4.4}$$

where F is a matrix stable and (F,q) is a controllable pair.

The plant input is taken as

$$u(k) = \theta^T(k)\omega(k) + u_2(k) + c_0 r(k)$$
$$u_2(k) = c_1 e_1(k+1-n) + c_2 \sum_{i=1}^{\infty} e_1(k+1-in) \tag{4.5}$$

where $\theta^T(k) = [\theta_1^T(k), \theta_2^T(k), \theta_3(k)]$ is a (2*n*-1) dimensional vector of control parameters, $c_0(t)$ is a scalar gain, $\omega^T(k) = [\omega_1^T(k), \omega_2^T(k), y(k)]$. Besides, $e_1(k) = y_m(k) - y(k)$, c_1 and c_2 are constants of the repetitive controller and n are the number of samples per cycle of the reference voltage. The repetitive controller is implemented in the αβ frame. Thus, the repetitive control law u_2 is converted to dq axis using the T synchronous transformation..

V. Parameter Adaptation Algorithm

There are a number of well-known parameter estimation techniques which have been successfully applied to identification problems. In these scheme is considered a recursive least-squares (RLS) modified algorithm:

$$\theta(k+1) = (\mathbf{I} - t_s\sigma\mathbf{P}(k))\theta(k) - \frac{t_s\varepsilon_1(k)\mathbf{P}(k)\zeta(k)}{\overline{m}(k)} \tag{5.1}$$

$$\mathbf{P}(k+1) = (1 + t_s\lambda\overline{\mu}^2)\mathbf{P}(k) - \cdots$$
$$\cdots - t_s\left(\frac{\mathbf{P}(k)\zeta(k)\zeta^T(k)\mathbf{P}(k)}{\overline{m}(k)} + \overline{\mu}^2\frac{\mathbf{P}^2(k)}{R^2}\right) \tag{5.2}$$

where $\mathbf{P} = \mathbf{P}^T$ is so that

$$0 < \mathbf{P}(0) \leq \lambda R^2\mathbf{I} \quad , \quad \mu^2 \leq k_\mu\overline{\mu}^2 ,$$
$$\overline{m}(k) = 1 + \alpha_1[m(k)]^2 \quad , \quad \zeta(k) = W_m(z)I\omega(k) , \tag{5.3}$$

$$m(k+1) = (1 - t_s\delta_0)m(k) + t_s\delta_1(|u(k)| + |y(k)| + 1),$$
$$m(0) > \frac{\delta_1}{\delta_0}, \quad \delta_1 \geq 1 , \tag{5.4}$$

where α_1, δ_0, δ_1, λ, $\overline{\mu}$ and R^2 are positive constants and δ_0 satisfies $\delta_0 + \delta_2 \leq \min[p_0, q_0]$, $q_0 \in \Re^+$ is such that the poles of $W_m(z\text{-}q_0)$ and the eigenvalues of $\mathbf{F} + q_0\mathbf{I}$ are stable and δ_2 is a positive constant. $p_0 > 0$ is defined in **S6** and σ in (5.1) is given by

$$\sigma = \begin{cases} 0 & \text{if} \quad \|\theta\| < M_0 \\ \sigma_0\left(\frac{\|\theta\|}{M_0} - 1\right) & \text{if} \quad M_0 \leq \|\theta\| \leq 2M_0 \\ \sigma_0 & \text{if} \quad \|\theta\| \geq 2M_0 \end{cases} \tag{5.5}$$

where $M_0 > \|\theta^*\|$ and $\sigma_0 > 2\overline{\mu}^2/R^2 \in \Re^+$ are design parameters. The modified error in (5.1) is defined in [6] and is given by

$$\varepsilon_1(k) = e_1(k) + \theta^T(k)\boldsymbol{\zeta}(k) - W_m(z)\,\theta^T(k)\boldsymbol{\omega}(k) - W_m(z)u_2(k)$$

or

$$\varepsilon_1(k) = \boldsymbol{\phi}^T(k)\boldsymbol{\zeta}(k) + \mu\eta(k) \qquad (5.6)$$

The recursive least-squares (RLS) used as the parameter adaptation algorithm has fast convergence if compared with others algorithms.

VI. Results

In order to verify the analysis and to demonstrate the performance of the proposed RMRAC controller (Fig. 5), both simulation and experimental results have been carried out. Table I presents the parameters of the reference model, three-phase PWM inverter, LC filter and load, used to in the simulation and experimental results. The repetitive controller gains c_1 and c_2 used in simulations results are 0.05 and 0.02, respectively. And gains of the prototype have been 0.25 and 0.05, respectively.

Table I
Reference Model, 3ϕ PWM Inverter, LC Filter and Load Parameters

Reference Model Parameters	LC filter inductance	L_m = 10 mH
	LC filter capacitance	C_m = 60 μF
	Load	R_m = 12 Ω
System Parameters	LC filter inductance	L_f = 5.4 mH
	LC filter capacitance	C_f = 75μF
	Inductors resistance	R_f = 0.1 Ω
	Load	R = 17 Ω
	Reference voltage	V_{phase} = 30V, V_{line} = 50V, f = 60Hz
	Output rectifier capacitor	C_{rec} = 330μF
	DC inverter power supply	E = 55V
	Sampling interval	t_s = 1/1800 s

A. Simulation Results

The simulation purposes is to verify the control approach, as well to design the controller parameters and to study the controller static and dynamic performance before its implementation by a prototype.

The reference model parameters, in Table I, produces the following reference model plant:

$$W_m(z) = \frac{0.1940\,z + 0.1495}{z^2 - 1.1187\,z + 0.4623}$$

To demonstrate the effectiveness of the proposed scheme the same one was applied to control the inverter of the Fig. 1 with a delta (Δ) connected load, such as in Fig. 2b. The regulation capability is verified with a 15V to 30V step in the three-phase reference voltages as show simulation results in Fig. 6 and Fig. 7.

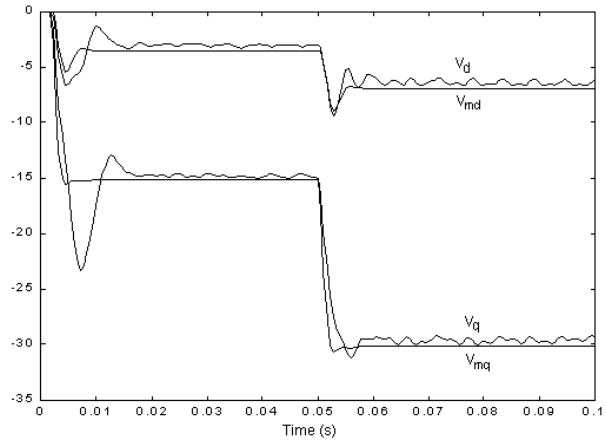

Fig. 6. Output and reference model voltages in the axis *d* and *q*.

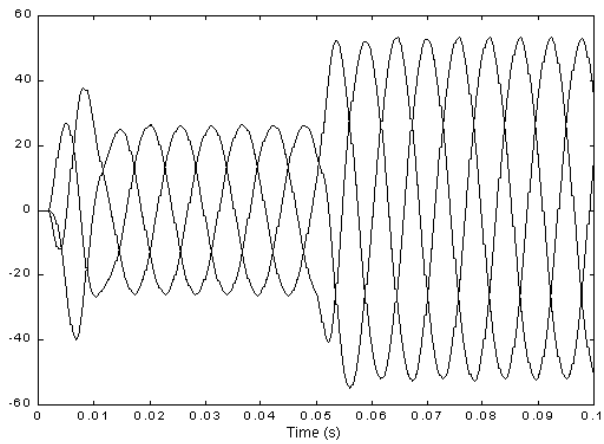

Fig. 7. Line-line output voltages with a step in the reference.

B. Experimental Results

In the prototype implementation has been used a system as in Fig. 1 with the parameters shown in Table I. Firstly, a linear three-phase load has been connected in wye (Y), as illustrated in Fig. 2a. A three-phase full-bridge rectifier with a C output capacitor filter is used as the non-linear load, see Fig. 8.

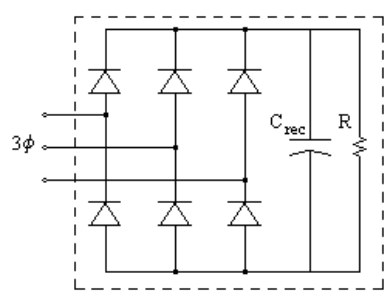

Fig. 8. Three-phase full-bridge rectifier with C output filter capacitor and resistive R load.

Fig. 9. shows the system response for a linear load. The line to line output voltages along with the line current are presented.

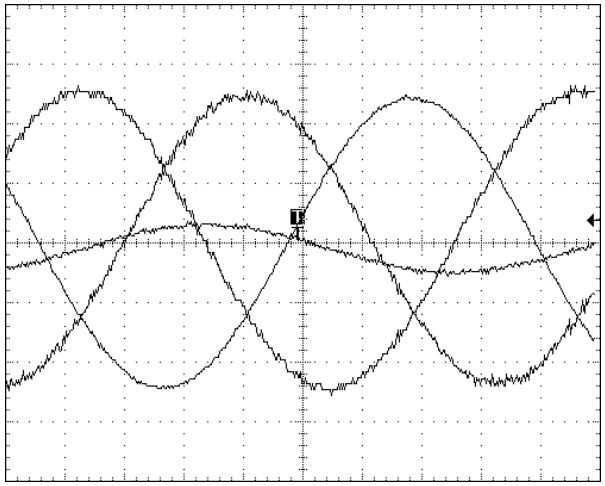

Fig. 9. Line-line output voltages (20 V/div) and line current (2 A/div) with three-phase linear load.

In the Fig. 10 is shown the spectral analysis of the line to line output voltages presented in the Fig. 9. The maximum total harmonic distortion (THD) obtained in each line to line voltage is:

$$THD_{V_{line}} = 1.343\,\%$$

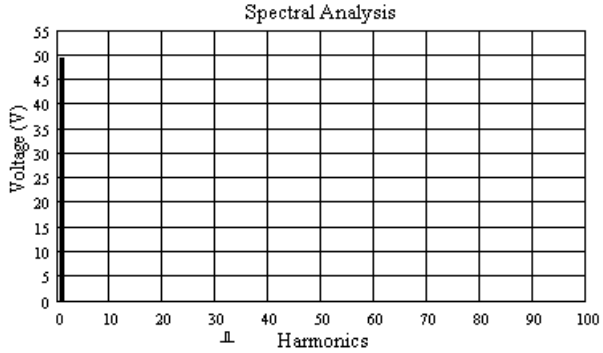

Fig. 12. Line-line output voltages spectral analysis to linear load.

The system response for a linear load plus a non-linear load is presented in the Fig. 11. Again, the line to line output voltages and one line current are presented.

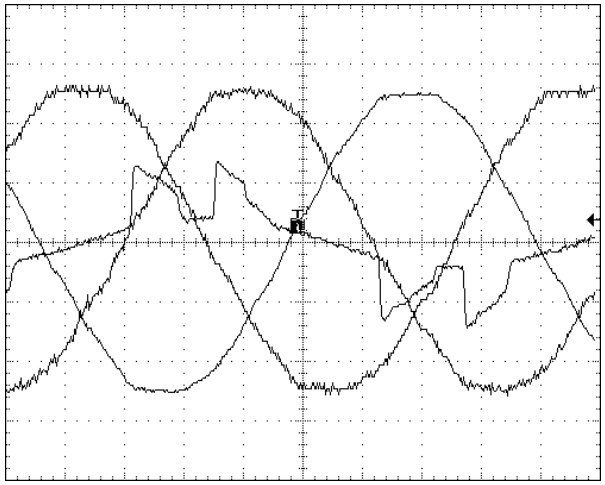

Fig. 11. Line-line output voltages (20 V/div) and line current (2 A/div) with three-phase linear load plus a three-phase rectifier.

In the Fig. 12 is shown the spectral analysis of the line to line voltages presented in the Fig. 11. The total harmonic distortion (THD) obtained in each line to line voltage is:

$$THD_{V_{line}} = 2.604\,\%$$

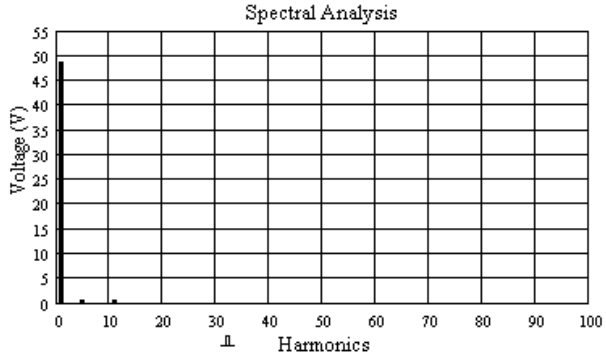

Fig. 12. Line-line output voltages spectral analysis for a linear plus a non linear load.

The output voltage waveforms for the system with only a non-linear load is presented in Fig. 13.

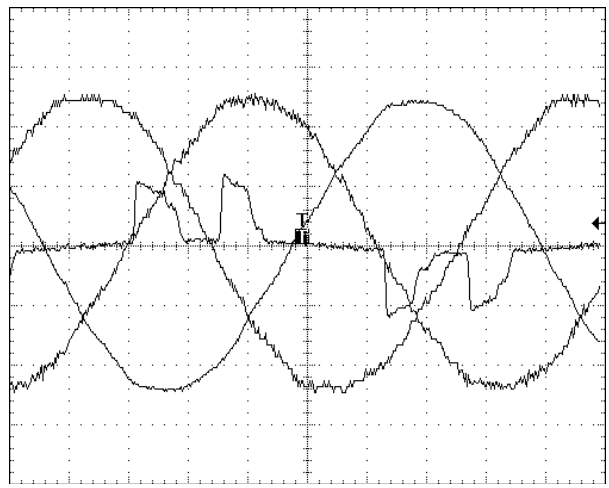

Fig. 13. Line-line output voltages (20 V/div) and line current (2 A/div) with three-phase rectifier load.

It is observed in the voltage waveforms that some noise is present in only two of them and is not present in triggered voltage. This noise appears in these voltage waveforms due to the acquisition mode of the used oscilloscope.

The simulation and experimental results demonstrate the effectiveness of the proposed scheme to control the three-phase UPS system.

VIII. CONCLUSIONS

This work describes a robust model reference adaptive controller (RMRAC) applied to three-phase uninterruptible power supplies (UPS's). The control laws are calculated separately using the RMRAC algorithm, which has been described in the section IV. A repetitive control law is incorporated to improve the tracking capability with cyclic loads. Simulation and experimental results demonstrate the

effectiveness of the proposed control scheme. Moreover, this scheme can be designed for a reduced order plant, without the *a priori* knowledge of exact model of the plant and the PWM inverter system. These type of controller (RMRAC) and PWM inverter system is particularly applicable to high power AC systems which require high performance.

VIII. REFERENCES

[1] K. P.Gokhale, A. Kawamura, R. G. Hoft, Dead Beat Microprocessor Control of PWM Inverter for Sinusoidal Output Waveform Synthesis, **IEEE Trans. on Ind. Appl.**, vol. IA-23, no. 5, p. 902-909, sep./oct. 1987;

[2] R. Zhang, F. C. Lee, D. Boroyevich, H. Mao, New High Power High Performance Power Converter Systems, **IEEE Ind. Electr. Conf.**, p. 8-14, 1998;

[3] S.-Y. Lee, Y.-M. Chae, G.-H. Choe, H.-S. Mok, D.-H. Jang, A New Control Strategy for Instantaneous Voltage Compensator Using 3-Phase PWM Inverter, **IEEE Ind. Elect. Conf.**, p. 248- 254, 1998;

[4] A. Kawamura, T. Haneyoshi , R. G. Hoft, Deadbeat Controlled PWM Inverter with Parameter Estimation Using Only Voltage Sensor, **IEEE Power Electr. Spec.Conf.**, 1986;

[5] H. A. Gründling, E. G. Carati, J. R. Pinheiro, A Robust Model Reference Adaptive Controller for UPS Applications, **IEEE Ind. Electr. Conf.**, p. 901-905, 1997;

[6] H. A. Gründling, E. G. Carati, J. R. Pinheiro, Analysis and Implementation of a Modified Robust Model Reference Adaptive Control with Repetitive Controller for UPS Applications, **IEEE Ind. Electr. Conf.**, p. 391-395, sep. 1998;

[7] H. W. V. D. Broeck, H. C. Skudenly, G. V. Stanke, Analysis and Realization of a Pulsewidth Modulator Based on Voltage Space Vectors, **IEEE Trans. on Ind. App**., vol. 24, no. 1, p. 142-149, jan. 1988;

[8] P. Ioannou and K. Tsakalis, "A Robust Direct Adaptive Controller", *IEEE Transactions on Automatic Control*, Vol. AC-31, n° 11, pp. 1033-1043, 1986.

[9] R. Lozano-Leal, J. Collado and S. Mondié, "Model Reference Robust Adaptive Control Without *A Priori* Knowledge of the High Frequency Gain", *IEEE Transactions on Automatic Control*, Vol. AC-35, n° 3, pp. 71-78, 1990.